Nitto

Innovation for Customers

HYDRANAUTICS



PRO Series

Specialty Membrane Products for Challenging Industrial Wastewaters

Consultas y ventas: AQUAREP · www.aquarep.com.ar · info@aquarep.com.ar · WhatsApp +54 9 11 6091-0087

Specialty Membrane Products for Challenging Industrial Wastewaters

Global urbanization has led to a rapid growth in industries that generate significant quantities of wastewater. As these trends escalate, Zero Liquid Discharge (ZLD) and Minimum Liquid Discharge (MLD) solutions are attracting greater interest as sustainable water management strategies for difficult-to-treat industrial wastewaters.

Moreover, growing pollution and water scarcity concerns have led governments to increase regulations, tighten discharge limits, restrict wastewater disposal options and increase disposal costs in order to reduce water footprint and safeguard the environment from pollution.

From its inception, membrane innovation and development has been at the heart of Hydranautics allowing us to offer the best ensemble of membrane technological solutions for ZLD/ MLD systems.

With a keen focus on providing solutions for wastewater treatment and management, Hydranautics introduces the PRO series elements – our high-performance specialty membranes tailored to meet the challenges and issues faced by wastewater treatment plants.

PRO Series Membranes for ZLD / MLD

Stricter environmental regulations and the need to treat wastewaters has made ZLD / MLD systems the norm for wastewater treatment with the aim of maximizing water recycling and minimizing wastewater volumes.

The PRO series from Hydranautics comprises elements that offer effective, integrated, site-specific ZLD / MLD solutions that are cost-effective, innovative, and sustainable. The PRO series specialty elements are:

PRO-XR	Low Fouling, High Rejection RO Membrane
PRO-LF	Low Fouling, High Pressure RO Membrane
PRO-XS	Selective Separation NF Membrane
PRO-XP	Ultra-High Pressure RO Membrane
PRO-XT	Ultra-High Temperature RO Membrane

Key features:

- Robust RO-NF membranes with high chemical tolerance, fouling resistance and lower cleaning requirement; thus achieving longer membrane life
- Membranes with extra-selectivity and ability to operate at ultra-high pressures of up to 1800 psi
- Innovative membrane chemistry and 34 mil thicker spacer design prevents colloidal and particulate fouling; thus reducing cleaning frequency and costs
- Proprietary vented seal carrier eliminates pressure shocks during startups.

Hydranautics ZLD / MLD Solutions

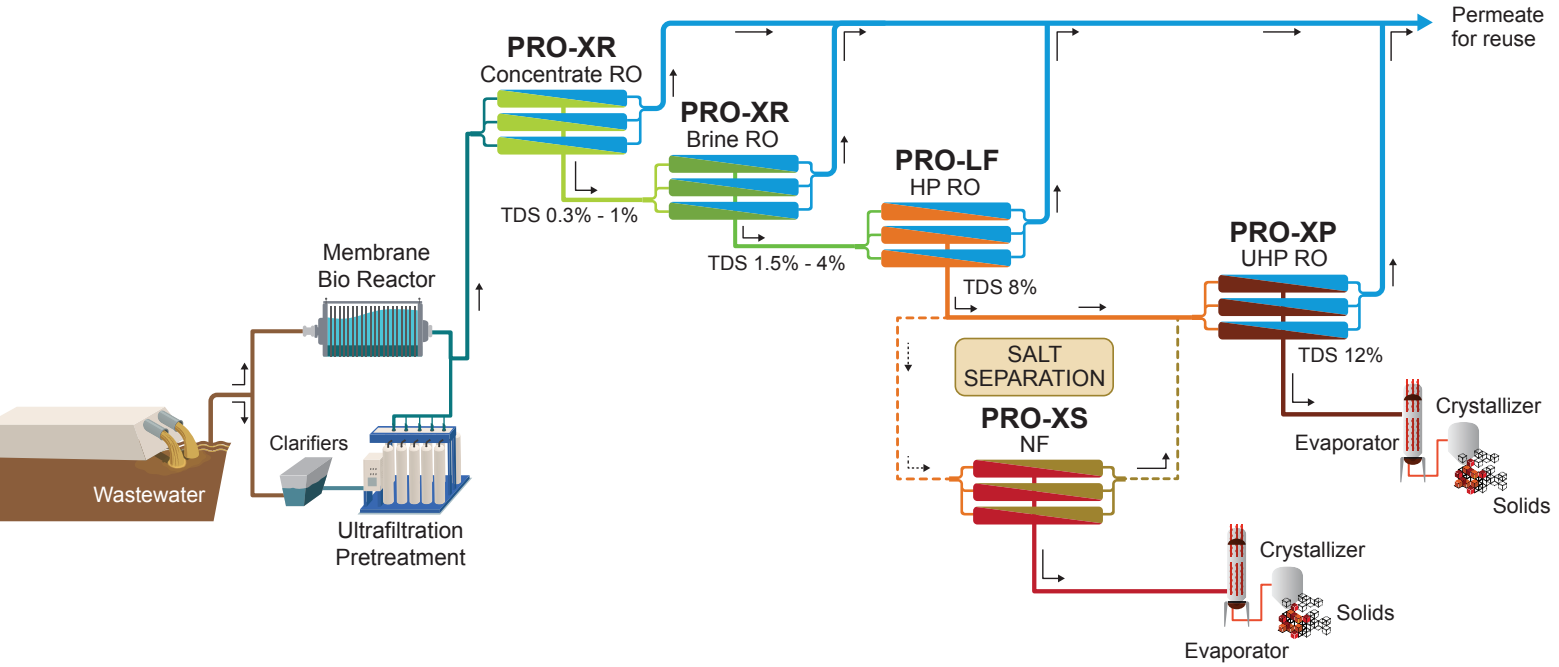

PRO Series Details and Specifications

PRO-XR

Low Fouling, High Rejection RO Membranes

PRO-XR supplies the best combination of high rejection and high flow capability at low pressures, compared to all commercial low pressure type RO elements.

Key benefits:

- Improved chemical resistance for increased membrane life
- Innovative feed spacer design to reduce cleaning frequency and costs

	PRO-XR1
Permeate flow, gpd (m^3/d)	11,500 (43.5)
Salt rejection, nominal (min.)	99.8% (99.5%)

Test Condition: 2,000 ppm NaCl solution, 6.5-7.0 feed pH, 225 psig (1.55 MPa) applied pressure, 15% permeate recovery, operating temp. 25°C

PRO-XS

Selective Separation NF membranes

PRO-XS is a series of spiral wound NF membranes with high ion selectivity designed for salt separation in the liquid stream to achieve more purified salt streams for either salt extraction or recycle.

Key benefits:

- High rejection of divalent anions such as sulfate and phosphate
- Good rejection of hardness and organic matter
- Low / high maximum pressure option for wide salinity range application

PRO-XS1	PRO-XS2	PRO-XS3
8,500 (32.2)	11,000 (41.6)	9,650 (36.5)
99.8% (99.6%)	99.7% (99.6%)	99.7% (99.6%)

Test Condition: 2,000 ppm $MgSO_4$ solution, 6.5-7.0 feed pH, 110 psig (0.76 MPa) applied pressure, 15% permeate recovery, operating temp. 25°C

PRO-LF

Low Fouling, High Pressure RO Membranes

PRO-LF are spiral wound RO membranes which are neutrally charged and have a hydrophilic coating to minimize fouling while treating high salinity wastewaters. PRO-LF is ideal for treating high-fouling brine streams generated from the first step of a ZLD system.

Key benefits:

- Neutrally charged surface with hydrophilicity helps to achieve the lowest organic fouling
- Increases mean time between cleanings, reducing chemical costs and system downtime leading to more productivity

PRO-LF1	PRO-LF1-4040
Permeate flow, gpd (m^3/d):	
7,700 (29.1)	1,480 (5.6)
Salt rejection, nominal (min.)	99.8% (99.7%)

Test Condition: 32,000 ppm NaCl solution, 6.5 - 7.0 feed pH, 800 psig (5.5 MPa) applied pressure, 10% permeate recovery, operating temp. 25°C

PRO-XP

Ultra High Pressure RO Membranes

PRO-XP are ultra-high pressure RO membranes which can operate at pressures up to 1,800 psi (12.4 MPa), exceeding normal RO pressure limits of 1,200 psi (8.27 MPa).

Key benefits:

- Complements BWRO and SWRO by further increasing the solute concentration
- Reduces CAPEX and OPEX by downsizing the evaporator by reducing brine volume
- Increases the overall efficiency of ZLD / MLD systems

	PRO-XP1
Permeate flow, gpd (m^3/d)	8,000 (30.3)
Salt rejection, nominal (min.)	99.8% (99.7%)

Test Condition: 32,000 ppm NaCl solution, 6.5 - 7.0 feed pH, 800 psig (5.5 MPa) applied pressure, 10% permeate recovery, operating temp. 25°C

PRO-XT

Ultra High Temperature RO Membranes

PRO-XT are ultra-high-temperature RO membranes which are considered a breakthrough in membrane operating parameters. The membranes are useful in industries where stable operation at high temperatures is imperative like laundry wastewater reclamation, mining wastewater, produced water in oil & gas industry, etc.

Key benefits:

- Ability to operate at high temperatures up to 80°C at 20 bar
- Thicker feed spacer to reduce foulant blockage

	PRO-XT2
Permeate flow, gpd (m^3/d)	6,230 (23.6)
Salt rejection, nominal (min.)	99.7% (99.6%)

Test Condition: 32,000 ppm NaCl solution, 800 psig (5.5 MPa) applied pressure, 77°F (25°C) operating temperature, 15% permeate recovery 6.5 - 7.0 pH range

Market Segments and Applications

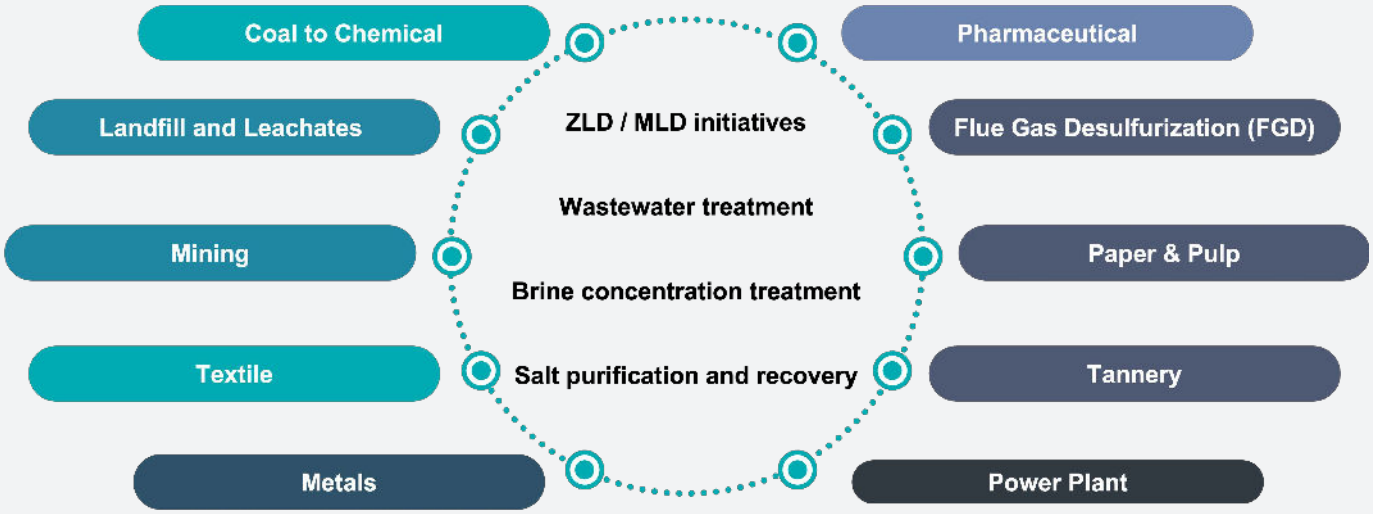











About Hydranautics

Hydranautics – A Nitto Group Company is a global leader in research, including reverse osmosis, nanofiltration, ultrafiltration, and microfiltration. Hydranautics has over 50 years experience in the membrane technology arena and are committed to creating innovative membrane technologies which provide clean water to a thirsty world.

Our Global Membrane Division is headquartered in Oceanside, CA, USA, and two state-of-the-art manufacturing sites are located in Oceanside, CA, USA, and Shiga, Japan. Our world-wide sales and customer service offices are located throughout Europe, Asia, the Middle East, North America, and South America.

Hydranautics Corporate office:

Nitto
Innovation for Customers

HYDRANAUTICS

Sep 2024

Consultas y ventas: AQUAREP · www.aquarep.com.ar · info@aquarep.com.ar · WhatsApp +54 9 11 6091-0087