M800 Transmitter Series for pH, Oxygen, Ozone, Flow, CO_2, Conductivity, TOC, Flow And Turbidity

Intelligent and intuitive

Technical Data





ISM® c UL US LISTED

Short description

The M800 transmitter series features premium Intelligent Sensor Management (ISM®) technology measuring pH/ORP, optical DO, amperometric and optical Oxygen (DO as well as O_2 gas), Dissolved Carbon Dioxide, Conductivity and in some models – Dissolved Ozone, Total Organic Carbon (TOC) and Flow. The multi-parameter transmitter accepts any compatible combination of sensors. In addition to this, the mixed-mode capability of the M800 1-channel allows the connection of analog or digital ISM sensors. Up to four channels of process measurement provides immediate Plug and Measure installation and operation, predictive sensor maintenance and dynamic lifetime status. Thanks to iMonitor™, the maintenance conditions of the measuring loop are observed and displayed comprehensively for preventative action. The color touchscreen ensures intuitive operation, with user selectable control and alarm management for complex applications.

Features

- Multi-parameter measurement
- 1-channel/2-channel/4-channel versions (plus 2 flow inputs in some models)
- Premium ISM functionality
- Mixed-mode for M800 1-channel
- iMonitor for predictive maintenance
- Color touchscreen with an intuitive user interface
- User management and logbook
- Graphic trending
- 4-wire installation
- Eight 0/4…20 mA current outputs, self powered, galvanically isolated
- Eight freely-configurable relays
- IP66 rated/UL Type 4X
- 10 languages: English, German, French, Italian, Spanish, Portuguese, Russian, Japanese, Korean and Chinese

Contents

Dimensions and Installation Drawings	2
Specifications	4
Connector Pin Definitions	10
Ordering Information/Parameter Fit Guide	14

METTLER TOLEDO

Consultas y ventas: AQUAREP · www.aquarep.com.ar · info@aquarep.com.ar · WhatsApp +54 9 11 6091-0087

Assembly

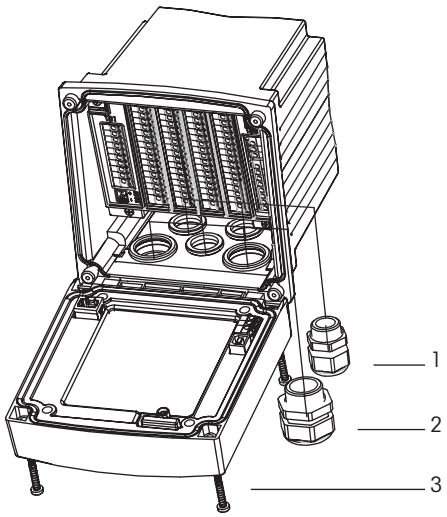

1 3 pieces M20 × 1.5 cable glands
2 2 pieces M25 × 1.5 cable glands
3 4 pieces screws

Dimension drawings

Polycarbonate (PC) housing

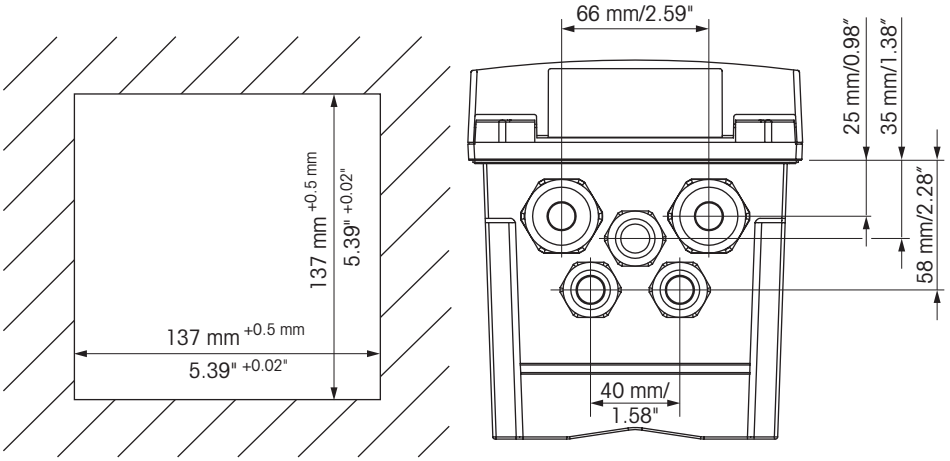

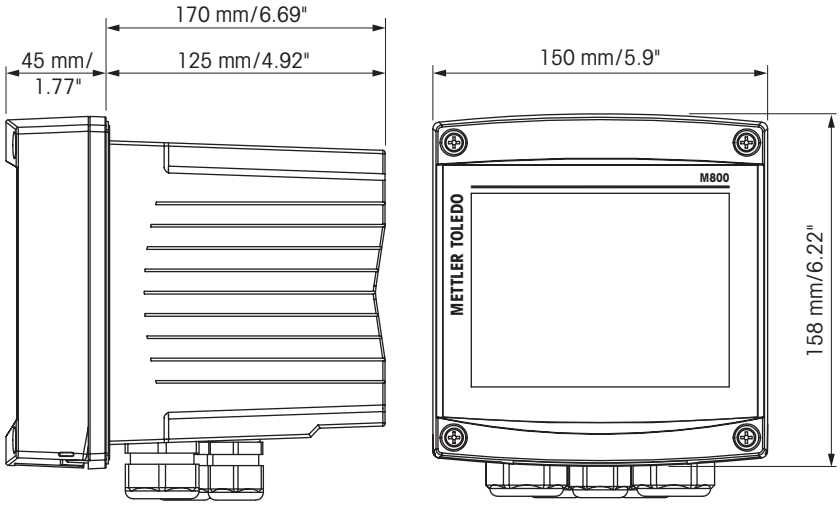

Stainless steel housing

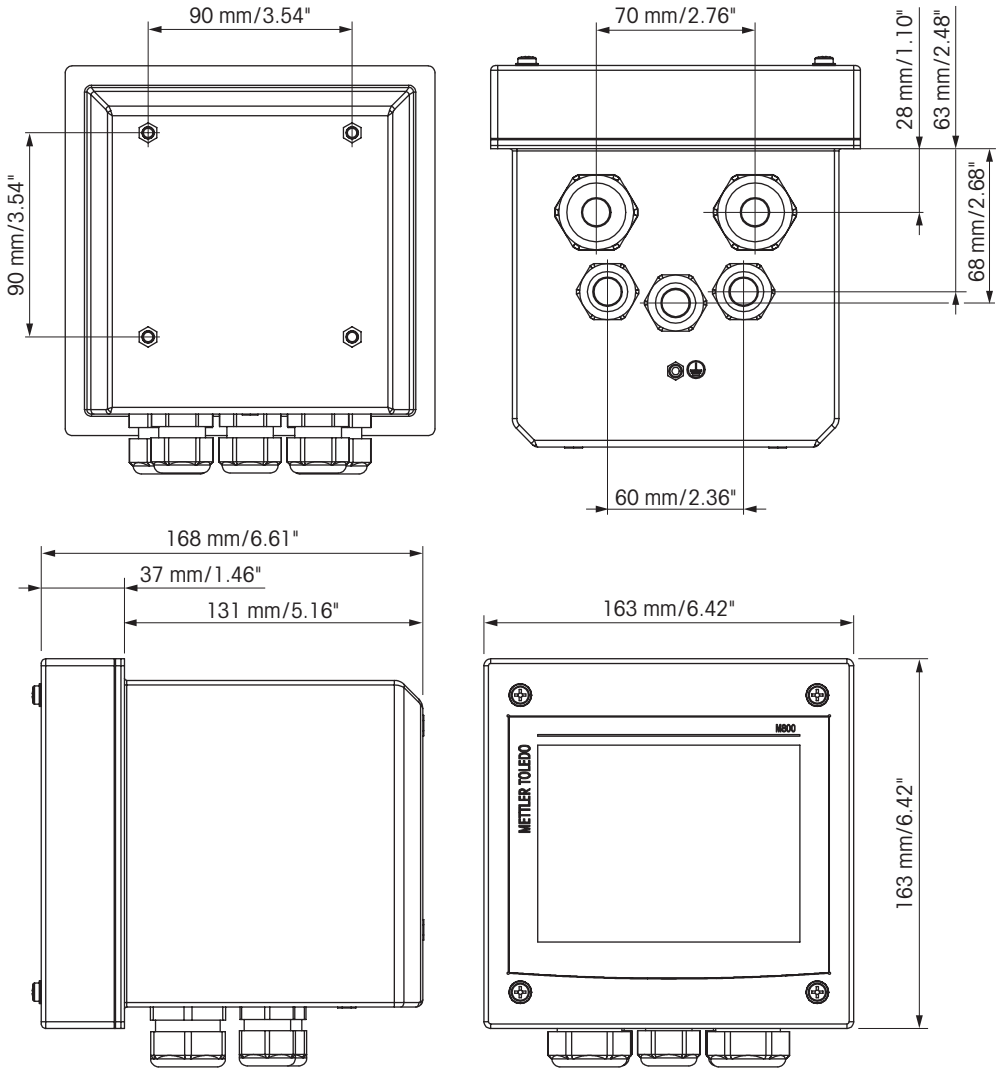

pH/ORP (incl. pH/pNa)

Measurement parameters	pH, mV, and temperature
pH range	–2.00 to 16.00 pH
Max. sensor cable length	• ISM: 80 m (260 ft) • Analog: 10 to 20 m (33 to 65 ft) depending on sensor
pH resolution	Auto/0.001/0.01/0.1/1 (can be selected)
pH accuracy	ISM: ±1 digit
mV range	–1500 to 1500 mV
mV resolution	Auto/0.001/0.01/0.1/1 mV (can be selected)
mV accuracy	• Analog: ±1 mV • ISM: ±1 digit
Temperature measuring range	–30 to 130 °C (–22 to 266 °F)
Temperature resolution	Auto/0.001/0.01/0.1/1 °C (°F) (can be selected)
Temperature accuracy	• Analog: ±0.25 K • ISM: ±1 digit
Temperature compensation	Automatic/manual, plus adjustable solution temperature compensation
Calibration	1-point (offset), 2-point (slope or offset) or process (offset)

Amperometric oxygen

Measurement parameters	• Dissolved oxygen: Saturation or concentration and temperature • Oxygen in gas: Concentration and temperature
Current range	0 to –7000 nA
Resolution current	• ISM: ±1 digit • Analog: 6 pA
Max. sensor cable length	• ISM 80 m (260 ft) • Analog: 20 m (65 ft)
DO concentration range	0 ppb (µg/L) to 50.00 ppm (mg/L)
DO saturation range	0 to 500 % air, 0 to 200 % O_2
DO accuracy	±1 digit
O_2 gas concentration range	0 to 9999 ppm O_2 gas
O_2 gas saturation range	0 to 100 % O_2 gas
O_2 gas accuracy	±1 digit
Resolution	Auto/0.001/0.01/0.1/1 (can be selected)
Temperature measuring range	–30 to 150 °C (–22 to 302 °F)
Temperature resolution	Auto/0.001/0.01/0.1/1 °C (°F) (can be selected)
Temperature accuracy	±0.25 K in the range of –10 to +80 °C (14 to +176 °F)
Polarization voltage	–1000 to 0 mV
Temperature input	NTC 22 kΩ/Pt1000
Temperature compensation	Automatic
Calibration	1-point (slope or offset) or process (slope or offset)

Optical oxygen

Measurement parameters	DO saturation or concentration and temperature
Max. sensor cable length	50 m (164 ft)
DO concentration range	0 ppb (µg/L) to 50.00 ppm (mg/L)
DO saturation range	0 to 500 % air, 0 to 100 % O_2
DO resolution	Auto/0.001/0.01/0.1/1 (can be selected)
DO accuracy	±1 digit
Temperature measuring range	–30 to +150 °C (–22 to 302 °F)
Temperature resolution	Auto/0.001/0.01/0.1/1 °C (°F) (can be selected)
Temperature accuracy	±1 digit
Temperature compensation	Automatic
Calibration	1-point (depending on sensor model), 2-point or process, process scaling

Dissolved carbon dioxide

CO_2 measuring ranges	• 0 to 5000 mg/L • 0 to 200 %sat • 0 to 1500 mm Hg • 0 to 2000 mbar • 0 to 2000 hPa
Max. sensor cable length	80 m (260 ft)
CO_2 accuracy	±1 digit
CO_2 resolution	Auto/0.001/0.01/0.1/1 (can be selected)
mV range	–1500 to 1500 mV
mV resolution	Auto/0.01/0.1/1 mV
mV accuracy	±1 digit
Total pressure range (TotPres)	0 to 4000 mbar
Temperature measuring range	–30 to 150 °C (–22 to 302 °F)
Temperature resolution	Auto/0.001/0.01/0.1/1 K (°F), (can be selected)
Temperature accuracy	±1 digit
Temperature repeatability	±1 digit
Calibration	1-point (offset), 2-point (slope or offset) or process (offset)

Dissolved carbon dioxide high

CO_2 measuring ranges	• 0 to 10 bar p (CO_2)/0 to 145 psi p (CO_2) • 0 to 15 g/L • 0 to 7 V/V CO_2
Accuracy in fluids [1)]	• ±1 % of reading (within ± 5 % of calibration temperature) • ±2 % of reading over temperature range 0 to 50 °C (32 to 122 °F)

1) Complete loop of sensor and transmitter.

Dissolved ozone

Measurement parameters	Concentration and temperature
Display range for current	0 to –900 nA
Ozone measuring range	Concentration 0.1 ppb (µg/L) to 5.00 ppm (mg/L) O_3
Ozone accuracy	±1 digit
Resolution current	±1 digit
Temperature compensation	Automatic
Temperature measuring range	–30 to 150 °C (–22 to 302 °F)
Temperature resolution	Auto/0.001/0.01/0.1/1 °C (°F) (can be selected)
Temperature accuracy	±1 digit
Max. sensor cable length	80 m
Calibration	1-point (offset) or process (slope or offset)

Conductivity 2-e/4-e

Measurement parameters	Conductivity/resistivity and temperature	
Conductivity ranges	2-electrode sensor:	0.02 to 2,000 µS/cm (500 Ω × cm to 50 MΩ × cm)
	4-electrode sensor:	0.01 to 650 mS /cm (1.54 Ω × cm to 0.1 MΩ × cm)
Cell constants	0.01/0.1/10	
Display range for 2-e sensor	0 to 40,000 mS/cm (25 Ω × cm to 100 MΩ × cm)	
Display range for 4-e sensor	0.01 to 650 mS/cm (1.54 Ω × cm to 0.1 MΩ × cm)	
Chemical concentration curves	NaCl: 0–26 %@0 °C to 0–28 %@+100 °C NaOH: 0–12 %@0 °C to 0–16 %@+ 40 °C to 0–6 %@+100 °C HCl: 0–18 %@–20 °C to 0–18 %@0 °C to 0–5 %@+50 °C HNO_3: 0–30 %@–20 °C to 0–30 %@0 °C to 0–8 %@+50 °C H_2SO_4: 0–26 %@–12 °C to 0–26 %@+5 °C to 0–9 %@+100 °C H_3PO_4: 0–35 %@+ 5 °C to +80 °C User-defined concentration table (5 × 5 matrix)	
TDS ranges	NaCl, $CaCO_3$	
Max. sensor cable length	• ISM: 80 m (260 ft) • Analog: 61 m (200 ft); with 4-e sensors:15 m (50 ft)	
Cond/Res accuracy	• ISM: ±1 digit • Analog: ±0.5 % of reading or 0.25 Ω, whichever is greater, up to 10 MΩ-cm	
Cond/Res repeatability	• ISM: ±1 digit • Analog: ±0.25 % of reading or 0.25 Ω, whichever is greater	
Cond/Res resolution	Auto/0.001/0.01/0.1/1 (can be selected)	
Temperature input	Pt1000/Pt100/NTC22K	
Temperature measuring range	–40 to 200 °C (–40 to 392 °F)	
Temperature resolution	Auto/0.001/0.01/0.1/1 °C (°F) (can be selected)	
Temperature accuracy	• ISM: ±1 digit • Analog: ±0.25 K (±0.45 °F) within –30 to +150 °C ±0.50 K (±0.90 °F) outside	
Temperature compensation	Auto/selectable as: Std. (standard high purity water Thornton/Light), Light 84, Std. pure water referenced to 75 °C, linear %/°C (adjustable), 50 % glycol, 100 % glycol, cation, ammonia, isopropyl alcohol, none	
Calibration	1-point, 2-point or process	
RO % rejection or % recovery	0 to 100 % (computed from two conductivity measurements)	

TOC

Measurement parameters	TOC, conductivity, and temperature
Measurement range	0.05 to 2,000 ppb C (µg C/L)
Total flow range	0 to 9,999,999 Gallons; 37,850,00 Liters; 37,850 m^3
Accuracy	• ±0.1 ppb C for TOC <2.0 ppb (for water quality >15 mΩ × cm [.067 µS/cm]) • ±0.2 ppb C for TOC >2.0 ppb and <10.0 ppb (for water quality >15 mΩ × cm) • ±5 % of measurement for TOC >10.0 ppb (for water quality 0.5 to 18.2 mΩ × cm)
Repeatability	±0.05 ppb C <5 ppb, ±1.0 % >5 ppb
Resolution	0.001 ppb C (µgC/L)
Analysis time	Continuous
Resolution	4 significant digits, auto-ranged, up to 4 digits for total flow
Initial response time	<60 seconds
Update rate	1 second
Limit of detection	0.025 ppb C
Conductivity accuracy	±2 %, 0.02 to 20 µS/cm, ±3 %, 20 to 100 µS/cm; cell constant cm^{-1}
Cell constant accuracy	±2 %
Temperature sensor	Pt1000 RTD, Class A
Temperature accuracy	±0.25 °C
Max length ISM cable	91 m (300 ft)

Flow

Measurement parameters	Flow, velocity, frequency
Flow rate range	0 to 9999 GPM, m^3/hr, L/min, ft/s, mts/s
Total flow range	0 to 9,999,999 Gallons; 37,850,00 Liters; 37,850 m^3
RO % recovery	0 to 100 %
Frequency range	0 to 4,000 Hz
Update rate	1 second
Resolution	4 significant digits, auto-ranged, up to 4 digits for total flow

Turbidity

Light source	Light-emitting diode (LED), emitting frequency 880 nm
Measurement range	• 5 to 4000 FTU (Formazin Turbidity Units) and 0 to 30 g/L suspended solids with InPro® 8200 • 10 to 4000 FTU and 0 to 250 g/L suspended solids with InPro 8050 and InPro 8100
Selectable measuring units	FTU, NTU, EBC, g/L, mg/L, %, ppm, Optical density
Parameter Sets	Three different parameter sets (A, B, C) can be stored in memory and recalled by software menu or remote access via digital inputs
Sensor diagnostics	Light Source (internal reference signal = 0)
Calibration	• Manual calibration "Edit": Offset and gain values for the sensor can be entered directly • Process calibration: Single-point grab-sample calibration (offset or slope: user-selectable) • Multi-point calibration (decreasing): 2-, 3-, 4- or 5-point automatic calibration (offset and gain will be adjusted automatically) • In situ calibration (increasing): 2-, 3-, 4- or 5-point automatic calibration

Electrical specifications

Power requirements	100 to 240 V AC or 20 to 30 V DC, 10 W, AWG 16–24, 0.2 mm² to 1.5 mm²
PE connection (stainless steel versions)	AWG 18, 0.8 mm²
Frequency	50/60 Hz
Analog output signals	8 × 0/4 to 20 mA outputs, 22 mA alarm, galvanically isolated from input and from earth/ground
Measurement error through analog outputs	<±0.05 mA over 0 to 22 mA range
Analog output configuration	Linear, Bi-linear, Logarithmic, Autoranging
Load	max. 500 Ω
Connection terminals	Spring cage terminals appropriate for AWG 16–24, 0.2 mm² to 1.5 mm² wires
Digital communication	USB port, Type B connector
PID process controller	2 × PID with pulse length, pulse frequency or analog control output signal
Cycle time	Ca. 1 s
Digital input	• 1-channel version: 4 • 2-channel version: 5 • 4-channel version: 6 with switching limits, 0.00 VDC to 1.00 VDC for low level, 2.30 VDC to 30.00 VDC for high level
Analog inputs	One 4 to 20 mA input, galvanically isolated from other signals
Measurement error through analog input	<±0.05 mA over 0 to 22 mA range
Main fuse	2.0 A slow Blow type FC, not replaceable
Relays	• 4-SPST mechanical rated at 250 VAC, 3 A (Relay 1 NC, Relay 2 to 4 NO) • 4-SPST Type Reed 250 VAC or DC, 0.5 A (Relay 5 to 8)
Alarm relay delay	0 to 999 s, selectable
User interface	• TFT color touchscreen 5.7" • Resolution 320 × 240 px • 256 colors
Input signal	Pulses: low <1.0 V; high >1.4 V (max. 36 V)
Accuracy	±1 digit, ±0.5 Hz
Repeatability	±0.2 Hz
Hold input	Selectable

Profibus DP

ASIC	netX 52
DP function	DPV1 Slave
DPV1 services	Class 1: Read, Write, I&M, Freeze, SYNC Class 2: Read, Write, I&M Set_Slave_Add
Baud rates	9.6k, 19.2k, 45.45k, 93.75k, 187.5, 500k, 1.5M Automatic baud rate detection
Physical layer	RS485

For wiring and setup, refer to the M800 DP Communication Setup Guide, part number: 30 246 547.

Environmental specifications

Polycarbonate (PC) housing

Dimensions (housing – H × W × D) [1]	150 × 158 × 170 mm (5.36" × 6.22" × 6.69")
Front bezel – H × W	150 × 158 mm (5.36" × 6.22")
Max. D – panel mounted	125 mm (4.92")
Weight	1.6 kg (3.5 lb)
Material	Polycarbonate/PC
Enclosure rating	IP66, UL Type 4X

1) H = Height, W = Width, D = Depth

Stainless steel housing

Dimensions (housing – H × W × D) [1]	163 × 163 × 168 mm (6.42" × 6.42" × 6.61")
Front bezel – H × W	163 × 163 mm (6.42" × 6.42")
Weight	2.8 kg (6.2 lb)
Material	Stainless steel 304
Enclosure rating	IP66, UL Type 4X

1) H = Height, W = Width, D = Depth

Mechanical specifications

Storage temperature	–40 to 70 °C (–40 to 158 °F)
Ambient temperature operating range	–20 to 50 °C (–4 to 122 °F)
Relative humidity	0 to 95 % non-condensing
Emissions	According to EN 61326 Class A
Hazardous areas	• M800 2-channel and 4-channel, PC housing only: cFMus Class I Division 2 • Optical sensors InPro 8100 and InPro 8200 only (for M800 1-channel, PC housing): ATEX II (1)G [Ex opis Ga] IIA/IIB
CE mark	The measuring system is in conformity with the statutory requirements of the EC Directives. METTLER TOLEDO confirms successful testing of the device by affixing to it the CE mark. For CE Declaration of Conformity see supplied CD.
Ratings/Approvals	UL Listed
Altitude, maximum	5,000 m

M800 1-channel

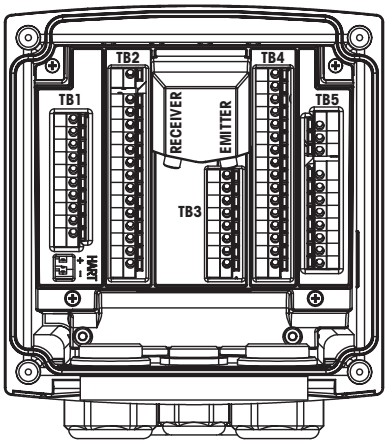

Terminal number	TB1	TB2	TB3	TB4	TB5
		For analog sensors sensor-specific. For ISM sensors not used.			L (+)
					N (–)
					Ground
1	DI1+		1-Wire	AI1+	Relay1_NC
2	DI1–		GND5V	AI1–	Relay1_COM
3	Aout1+		RS485B	DI4+	Relay2_NO
4	Aout1–		RS485A	DI4–	Relay2_COM
5	Aout2+		GND5V	DI5+	Relay3_NO
6	Aout2–		5V	DI5–	Relay3_COM
7	Aout3+		24V	DI6+	Relay4_NO
8	Aout3–		GND24V	DI6–	Relay4_COM
9	Aout4+		n. a.	Relay5_NO	n. a.
10	Aout4–		n. a.	Relay5_COM	n. a.
11	n. a.		n. a.	Relay6_NO	n. a.
12	n. a.		n. a.	Relay6_COM	n. a.
13	n. a.		n. a.	Relay7_NO	n. a.
14	n. a.		n. a.	Relay7_COM	n. a.
15	n. a.		n. a.	Relay8_NO	n. a.
16	n. a.		n. a.	Relay8_COM	n. a.

InPro 8000 Series Turbidity Sensor

Use the two connections labeled EMITTER and RECEIVER on the rear panel for connecting METTLER TOLEDO InPro 8000 sensors only.

M800 2-channel

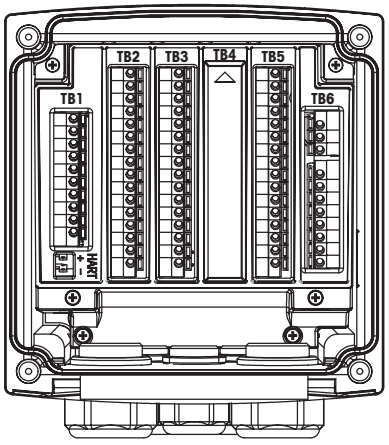

Terminal number	TB1	TB2	TB3	TB4	TB5	TB6
				Not installed		L (+)
						N (–)
						Ground
1	DI1+	DI2+	Aout5+		AI1+	Relay1_NC
2	DI1–	DI2–	Aout5–		AI1–	Relay1_COM
3	Aout1+	1-Wire_Ch1	Aout6+		DI4+	Relay2_NO
4	Aout1–	GND5V_Ch1	Aout6–		DI4–	Relay2_COM
5	Aout2+	RS485B_Ch1	Aout7+		DI5+	Relay3_NO
6	Aout2–	RS485A_Ch1	Aout7–		DI5–	Relay3_COM
7	Aout3+	GND5V_Ch1	Aout8+		DI6+	Relay4_NO
8	Aout3–	5V_Ch1	Aout8–		DI6–	Relay4_COM
9	Aout4+	24V_Ch2	Ain_Ch3		Relay5_NO	n. a.
10	Aout4–	GND24V_Ch2	AJ_Ch3		Relay5_COM	n. a.
11	n. a.	1-Wire_Ch2	5V_Ch3		Relay6_NO	n. a.
12	n. a.	GND5V_Ch2	GND5V_Ch3		Relay6_COM	n. a.
13	n. a.	RS485B_Ch2	Bin_Ch4		Relay7_NO	n. a.
14	n. a.	RS485A_Ch2	BJ_Ch4		Relay7_COM	n. a.
15	n. a.	GND5V_Ch2	5V_Ch4		Relay8_NC	n. a.
16	n. a.	5V_Ch2	GND5V_Ch4		Relay8_COM	n. a.

M800 4-channel

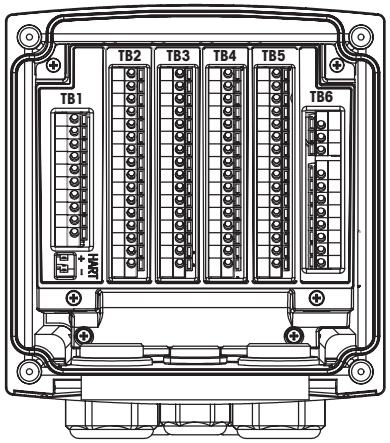

Terminal number	TB1	TB2	TB3	TB4	TB5	TB6
						L (+)
						N (–)
						Ground
1	DI1+	DI2+	Aout5+	DI3+	AI1+	Relay1_NC
2	DI1–	DI2–	Aout5–	DI3–	AI1–	Relay1_COM
3	Aout1+	1-Wire_Ch1	Aout6+	1-Wire_Ch3	DI4+	Relay2_NO
4	Aout1–	GND5V_Ch1	Aout6–	GND5V_Ch3	DI4–	Relay2_COM
5	Aout2+	RS485B_Ch1	Aout7+	RS485B_Ch3	DI5+	Relay3_NO
6	Aout2–	RS485A_Ch1	Aout7–	RS485A_Ch3	DI5–	Relay3_COM
7	Aout3+	GND5V_Ch1	Aout8+	GND5V_Ch3	DI6+	Relay4_NO
8	Aout3–	5V_Ch1	Aout8–	5V_Ch3	DI6–	Relay4_COM
9	Aout4+	24V_Ch2	Ain_Ch5	24V_Ch4	Relay5_NO	n. a.
10	Aout4–	GND24V_Ch2	AJ_Ch5	GND24V_Ch4	Relay5_COM	n. a.
11	n. a.	1-Wire_Ch2	5V_Ch5	1-Wire_Ch4	Relay6_NO	n. a.
12	n. a.	GND5V_Ch2	GND5V_Ch5	GND5V_Ch4	Relay6_COM	n. a.
13	n. a.	RS485B_Ch2	Bin_Ch6	RS485B_Ch4	Relay7_NO	n. a.
14	n. a.	RS485A_Ch2	BJ_Ch6	RS485A_Ch4	Relay7_COM	n. a.
15	n. a.	GND5V_Ch2	5V_Ch6	GND5V_Ch4	Relay8_NC	n. a.
16	n. a.	5V_Ch2	GND5V_Ch6	5V_Ch4	Relay8_COM	n. a.

M800 1-channel: TB2 – terminal assignment for conductivity 4-e or 2-e or pH/ORP – analog sensors

Terminal TB2	Cond. 4-e or 2-e		pH		Redox (ORP)	
	Function	Color	Function	Color [3]	Function	Color
1	Cnd inner1 [1]	White	Glass	Transparent	Platinum	Transparent
2	Not used	–	Not used	–	–	–
3	Cnd outer1 [1]	White/blue	Not used	–	–	–
4	Cnd outer1	–	Not used	–	–	–
5	Not used	–	Not used	–	–	–
6	Cnd outer2	–	Reference	Red	Reference	Red
7	Cnd inner2 [2]	Blue	Reference [4]	–	Reference [4]	–
8	Cnd outer2 (GND) [2]	Black	Solution GND [4]	Blue [5]	Solution GND [4]	–
9	Not used	–	Not used	–	–	–
10	Not used	–	Shield (GND)	Green/yellow	Shield (GND)	Green/yellow
11	Not used	–	Not used	–	–	–
12	RTD ret/GND	Bare shield	RTD ret/GND	White	–	–
13	RTD sense	Red	RTD sense	–	–	–
14	RTD	Green	RTD	Green	–	–
15	Not used	–	Not used	–	–	–
16	5V output	–	5 V output	–	–	–

1) For third party Cond 2-e sensors a jumper between 1 and 3 may be required.
2) For third party Cond 2-e sensors a jumper between 7 and 8 may be required.
3) Grey wire not used.
4) Install jumper between 7 and 8 for ORP sensors and pH electrodes without SG.
5) Blue wire for electrode with SG.

M800 1-channel: TB2 – terminal assignment for oxygen sensors – analog sensors

Terminal TB2	Function	InPro 6800 Color	InPro 6900 Color	InPro 6950 Color
1	Not used	–	–	–
2	Not used	–	–	–
3	Anode	Red	Red	Red
4	Anode	–[1)]	–[1)]	–
5	Reference	–[1)]	–[1)]	Blue
6	Not used	–	–	–
7	Not used	–	–	–
8	Guard	–	Grey	Grey
9	Cathode	Transparent	Transparent	Transparent
10	Shield (GND)	Green/yellow	Green/yellow	Green/yellow
11	Not used	–	–	–
12	NTC ret (GND)	White	White	White
13	Not used	–	–	–
14	NTC	Green	Green	Green
15	Not used	–	–	–
16	5 V output	–	–	–

1) Install jumper between 4 and 5 for InPro 6800 and InPro 6900.

M800 1-channel: TB3 – terminal assignment for oxygen, CO_2, conductivity, pH and turbidity – ISM sensors

Terminal TB3		Optical Oxygen, CO_2 hi (InPro 5500i)		UniCond® 2-e[1)], UniCond 4-e[1)]	pH, Amp. Oxygen, CO_2, and Cond 4-e	Turbidity (InPro 8600i/D1, InPro 8600i/D3)
	Function	VP8 cables: wire color	5-pin cables: wire color	Cables: wire color	Cables: wire color	Cables: wire color
1	1-Wire	–	–	–	Transparent (cable core)	
2	GND5V	–	Yellow	–	Red	Green/yellow
3	RS485B	Brown	Blue	Black	–	Green
4	RS485A	Pink	White	Red	–	Yellow
5	GND5V	Green/yellow	Grey	White	–	–
6	5V	–	–	Blue	–	–
7	24V	Grey	Brown	–	–	Brown
8	GND24V	Blue	Black	–	–	White
9	Not used	–	–	–	–	–
10	Not used	–	–	–	–	–
11	Not used	–	–	–	–	–
12	Not used	–	–	–	–	–
13	Not used	–	–	–	–	–
14	Not used	–	–	–	–	–
15	Not used	–	–	–	–	–
16	Not used	–	–	–	–	–

1) Transparent wire not connected.

M800 2-channel and 4-channel: TB2 and TB4 – terminal assignment for oxygen, conductivity, pH and ozone – ISM sensor

Terminal	TB2 (ISM Ch1, 2)	TB4 (ISM Ch3, 4)	Optical Oxygen [1], CO_2 hi [1]		UniCond 2-e [2]	pH, Amp. Oxygen, CO_2, Cond 4-e and O_3
	Function	Function	VP8 cables: wire color	5-pin cables: wire color	Cables: wire color	Cables: wire color
1	DI2+	DI6+	–	–	–	–
2	DI2–	DI6–	–	–	–	–
3	1-Wire_Ch1	1-Wire_Ch3	–	–	–	Transparent (cable core)
4	GND5V_Ch1	GND5V_Ch3	–	–	–	Red
5	RS485B_Ch1	RS485B_Ch3	–	–	Black	
6	RS485A_Ch1	RS485A_Ch3	–	–	Red	–
7	GND5V_Ch1	GND5V_Ch3	–	–	White	–
8	5V_Ch1	5V_Ch3	–	–	Blue	–
9	24V_Ch2	24V_Ch4	Grey	Brown	–	–
10	GND24V_Ch2	GND24V_Ch4	Blue	Black	–	–
11	1-Wire_Ch2	1-Wire_Ch4	–	–	–	Transparent (cable core)
12	GND5V_Ch2	GND5V_Ch4	Green/yellow	Grey	–	Red
13	RS485B_Ch2	RS485B_Ch4	Brown	Blue	Black	–
14	RS485A_Ch2	RS485A_Ch4	Pink	White	Red	–
15	GND5V_Ch2	GND5V_Ch4	–	Yellow	White	–
16	5V_Ch2	5V_Ch4	–	–	Blue	–

1) Always one O_2 optical or CO_2 hi sensor can be connected to plug TB2 and TB4.
2) Transparent wire not connected.

Transmitter overview

Polycarbonate (PC) housing

Transmitter	Order no.	Order no.
	Process	Water
M800 1-channel	30 026 633	–
M800 2-channel	52 121 813	58 000 802
M800 4-channel	52 121 853	58 000 804
M800 DP 2-channel	–	58 000 806

Stainless steel housing

Transmitter	Order no.
	Process
M800 1-channel	30 246 551
M800 2-channel	30 246 552
M800 4-channel	30 246 553
M800 DP 2-channel	–

M800 2-channel and 4-channel parameter fit guide

These versions are compatible with the following (digital) ISM and flow sensors.

Parameter	Water		Process [1]	
	2-channel	4-channel	2-channel	4-channel
pH/ORP	•	•	•	•
pH/pNa	•	•	•	•
UniCond 2-e	•	•	•	•
Conductivity 4-e	•	•	•	•
Amp. dissolved oxygen ppm/ppb/trace	–/•/– [3]	–/•/– [3]	•/•/• [2]	•/•/• [2]
Amp. oxygen gas ppm/ppb/trace	–/•/– [3]	–/•/– [3]	•/•/• [2]	•/•/• [2]
Optical dissolved oxygen	• [3]	• [3]	• [2, 4]	• [2, 3]
Dissolved carbon dioxide (InPro 5000i)	–	–	•	•
CO_2 hi (InPro 5500i)	–	–	• [4]	• [4]
TOC	•	•	–	–
Dissolved ozone	•	•	–	–
Flow	•	•	–	–

1) Process models are provided with PC housing or stainless steel housing.
2) Ingold sensors
3) Thornton sensors
4) 2-channel: An opt. dissolved sensor or a CO_2 hi sensor has to be connected to channel 2. 4-channel: Optical dissolved sensors and CO_2 hi sensors have to be connected to channel 2 and/or to channel 4.

M800 1-channel parameter fit guide

These version is compatible with the following (digital) ISM and analog sensors.

	Process [1]	
Parameter	**Analog**	**ISM**
pH/ORP	•	•
pH/pNa	–	•
UniCond 2-e/UniCond 4-e	–/–	•/•
Conductivity 2-e/Conductivity 4-e	•/•	–/•
Amp. dissolved oxygen ppm/ppb/trace	•/•/• [2]	•/•/• [2]
Amp. oxygen gas ppm/ppb/trace	•/•/• [2]	•/•/• [2]
Optical dissolved oxygen	–	• [2]
Dissolved carbon dioxide (InPro 5000i)	–	•
CO_2 hi (InPro 5500i)	–	•
Turbidity	• (backscatter)	•

1) Process models are provided with PC housing or stainless steel housing.
2) Ingold sensors

Accessories

Description	Order no.
Pipe Mount Kit for ½ DIN models (PC and stainless steel housing)	52 500 212
Panel Mount Kit for ½ DIN models (PC housing)	52 500 213
Wall Mount Kit for ½ DIN models (PC and stainless steel housing)	30 300 482
Protective Hood	300 733 28

Trademark Information
ISM is a registered trademark of the METTLER TOLEDO Group in Switzerland, Brazil, USA, China, European Union, South Korea, Russia and Singapore.
InPro is a registered trademark of the METTLER TOLEDO Group in Switzerland, Brazil, UK, USA, Austria, Belgium, Netherlands, Luxembourg, Germany, Spain, France, Italy and Russia.
UniCond is a registered trademark of the METTLER TOLEDO Group in the USA and China.
iMonitor is a trademark of the METTLER TOLEDO Group.

For addresses of METTLER TOLEDO
Market Organizations please go to:

Management System
certified according to
ISO 9001/ISO 14001

METTLER TOLEDO Group
Process Analytics

For more information

Subject to technical changes
© 01/2021 METTLER TOLEDO. All rights reserved
eCopy only. PA3020en D
Printed in Switzerland

Consultas y ventas: AQUAREP · www.aquarep.com.ar · info@aquarep.com.ar · WhatsApp +54 9 11 6091-0087