Analytical Transmitters

LENNTECH
Water Treatment Solutions



THORNTON
Leading Pure Water Analytics

M300 ISM Transmitters

- Conductivity/Resistivity
- pH/ORP
- Dissolved Oxygen

ISM



M300 ISM Transmitters

for Innovative Liquid Analysis

METTLER TOLEDO

Consultas y ventas: AQUAREP · www.aquarep.com.ar · info@aquarep.com.ar · WhatsApp +54 9 11 6091-0087

M300 ISM Analytical Transmitters
with plug and measure capability

METTLER TOLEDO THORNTON M300 ISM process analytical instrumentation provides reliable, accurate measurements of conductivity/resistivity, pH/ORP and dissolved oxygen. "Intelligent Sensor Management®" technology provides the utmost in convenience and control of sensor performance.

Quick and easy installation thanks to "Plug and Measure" capabilities
Operational errors at the transmitter are virtually eliminated since all relevant status and configuration information is automatically transferred from the sensor to the transmitter during startup.

Features

- Compact ¼ DIN panel mounting with NEMA 4X, IP65 panel seal
- Robust ½ DIN wall mounting with NEMA 4X, IP65 back cover
- ISM Sensors are immediately recognized at installation
- Measurements are available within seconds of connection
- ISM capabilities communicate type, model, serial number, full calibration data plus historical data
- Used with UniCond™ conductivity sensors with ISM for exceptionally wide range measurement
- On-line sensor diagnostics assure process surveillance
- Historical calibration and exposure information improves preventive maintenance programs
- Multiple languages: English, French, German, Italian, Spanish, Portuguese, Russian, Japanese
- CE compliant, UL Listed for US and Canadian standards



ISM

Applications

Pure and ultrapure water treatment for semiconductor rinsing, critical power/steam makeup and pharmaceutical waters.

Semiconductor processing in rinsers and wet benches with precise resistivity measurement and temperature compensation.

Power plant cycle chemistry and stator cooling monitoring with exceptionally accurate temperature compensation for specific and cation conductivity and pH and very low maintenance dissolved oxygen measurement.

Pharmaceutical water monitoring to meet USP, EP, and JP conductivity requirements including built-in tables of alarm limits.

Reclaim, recycle and wastewater treatment for the above industry applications for contaminant detection, diversion and neutralization.

M300 ISM Multiparameter Transmitter

- One or two field-configurable plug & measure channels for any available measurement parameters
- ISM for Conductivity/resistivity, pH/ORP, and/or dissolved oxygen
- Reduces number of instruments and amount of panel space



Measurement Specifications

Functional		
Conductivity/Resistivity Ranges		
0.01 Constant Sensor	0.002 to 500 µS/cm (2000 ohm-cm to 500 Mohm-cm)	
0.1 Constant Sensor	0.02 to 50,000 µS/cm (20 ohm-cm to 50 Mohm-cm)	
	Readout in equivalent S/m ranges is selectable	
TDS Ranges ($CaCO_3$ and NaCl)	Cover equivalent conductivity ranges	
RO % Rejection	0-100% (computed from two conductivity measurements)	
Conductivity Resolution	Four significant digits, auto-ranged	
pH, ORP Ranges	-1.00 to 15.00 pH, -1500 to 1500 mV; resolution 0.01 pH, 1 mV	
Dissolved Oxygen Ranges	0-20,000 ppb; 0-20 ppm, 0-200% saturation; resolution 0.1 ppb	
Temperature Measurement Range	-40 to 200 °C (-40 to 392 °F); resolution 0.1 °	
Temperature Sensor Input	Digital from sensor	
Update rate	Display and outputs, once per second	
Temperature Compensation		
Conductivity/Resistivity	Selectable as: Std (standard high purity Thornton/Light), Light 84, Std referenced to 75°C, linear %/°C, 50% glycol, 100% glycol, cation, ammonia, isopropyl alcohol, none	
pH	Automatic / manual for electrode output, plus adjustable solution temperature coefficient for solution ionization effects	
Dissolved Oxygen	Automatic, for membrane permeability and oxygen solubility	
Conductivity/Resistivity Calibration	1- or 2-point	
pH Calibration	1- or 2-point, with auto buffer recognition	
pH Diagnostics	Selectable continuous checking of membrane resistance and reference diaphragm/junction resistance (with solution ground sensors)	
Dissolved Oxygen Calibration	Air/comparison, zero	
Sensor maximum distance	91 m (300 ft) conductivity; 20 m (66 ft) pH, ORP, DO	
Performance		
System Accuracy		
Conductivity/Resistivity	Identical to sensor	
pH, ORP	Identical to sensor	
Dissolved Oxygen	Identical to sensor	
Outputs – see p. 4 for ratings	**One Channel**	**Two Channel**
Setpoints/Alarms	4 - high, low, outside, between, USP or EP	6 - high, low, outside, between, USP or EP
Relays	2 - SPDT, 2 SPST reed	2 SPDT, 1 SPST NO, 1 SPST NC, 2 SPST reed
Analog Output Signals	2	4
Discrete Inputs	1	2

M300 ISM Multiparameter Transmitter

Physical and Electrical Specifications

Enclosure/Power	
Operator interface	4 line back-lit LCD; 5-tactile keys
1/4 DIN Model Dimensions (H x W x D)	4.01 x 4.01 x 5.51 in (102 x 102 x 140 mm)
Max. Depth,- panel mounted	4.96 in (126 mm), excluding plug-in connectors
1/2 DIN Model Dimensions (H x W x D)	5.90 x 5.90 x 4.57 in (150 x 150 x 116 mm)
Max. Depth,- panel mounted	3.46 in (88 mm)
Material	Polycarbonate
Weight, 1/4 DIN Models	1.5 lb (0.7 kg)
Weight, 1/2 DIN Models	2 lb (1 kg)
UL Electrical Environment	Installation (overvoltage) Category II
Ratings/Approvals	UL listed, CE compliant; NEMA 4X, IP 65 - 1/2 DIN wall mount and 1/4 DIN panel seal
EMC Emissions	According to EN55011 Class A
Power	Universal 100-240 VAC, 50-60 Hz or 20-30 VDC; 5 W (on power loss, all settings are retained in non-volatile memory without batteries)
Environmental	
Storage temperature	-40 to 70 °C (-40 to 158 °F)
Ambient temperature operating range	-10 to 50 °C (14 to 122 °F)
Relative humidity	0 to 95%
Outputs	
Analog outputs (as specified for individual models)	Powered 0/4-20 mA, 22 mA alarm, 500 ohms maximum load; not for use with externally powered circuits
Analog output accuracy	± 0.05 mA
Analog output scaling	Linear, bi-linear, logarithmic (1,2,3 or 4 decades), auto-ranging
Relays (as specified for individual models)	All contacts are potential free, with adjustable hysteresis and time delay
SPDT, SPST NO, SPST NC	250 VAC/30 VDC, 3 A, resistive
SPST reed	300 VDC, 0.5 A, 10 W
Digital communications	USB, type B connector, for remote configuration and data acquisition
Discrete input (as specified for individual models)	Accepts dry contact closure for remote PID control auto/manual selection
PID Control	
Display	Auto/manual status and % output on bottom line of display
Settings	Auto/manual, setpoint, deadband, non-linear corner points, control limits, proportional gain,integral reset time (min.), derivative rate time (min.)
Manual Station	Controlled by up/down arrow keys in manual mode; remote auto/manual selection by discrete input
Control Output Types	One or two analog signals, relays—pulse frequency, or relays—pulse length

M300 ISM Multiparameter Transmitter

Dimensions for 1/4 DIN panel-mount models

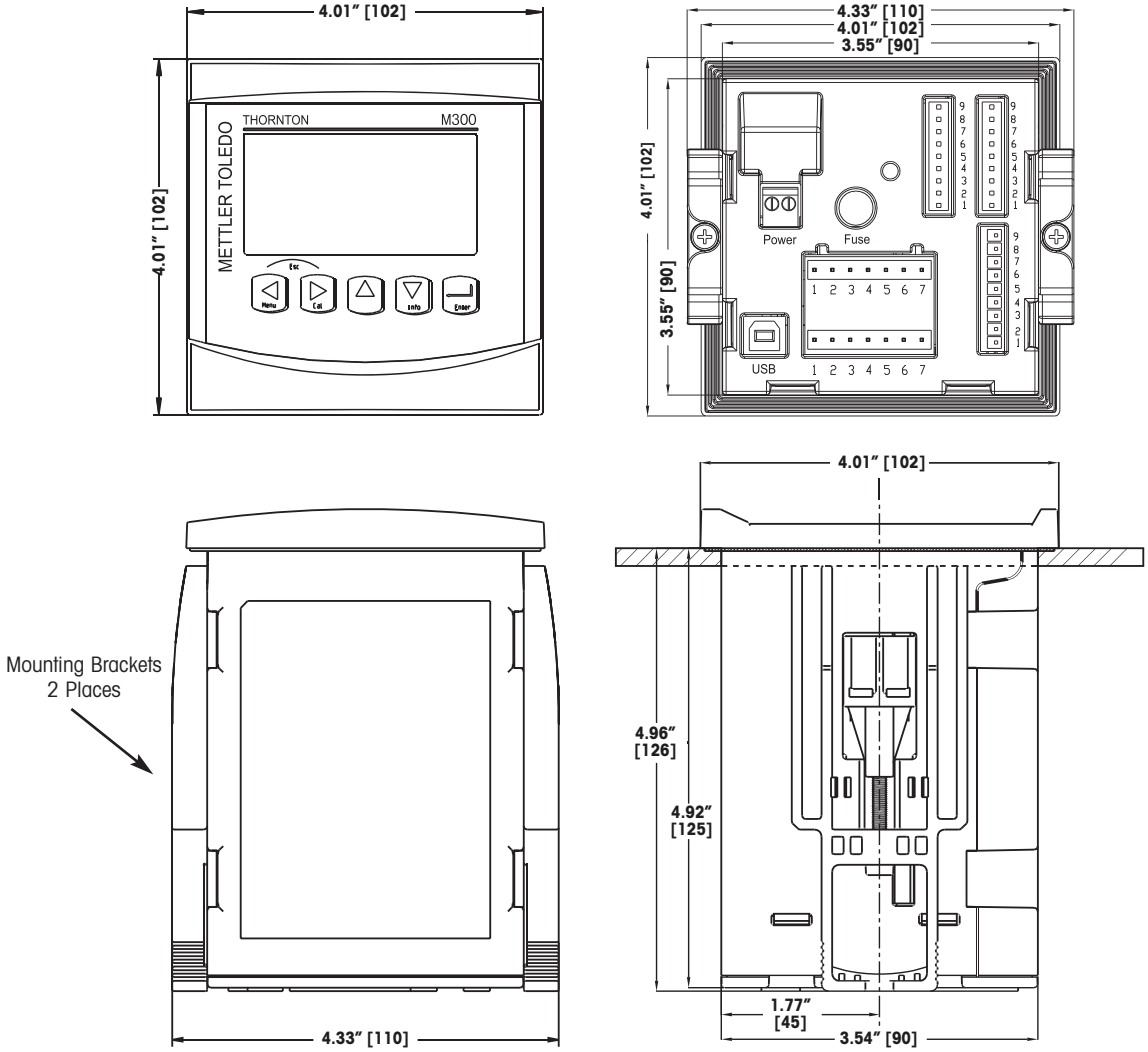

Dimensions for ¼ DIN panel cutout

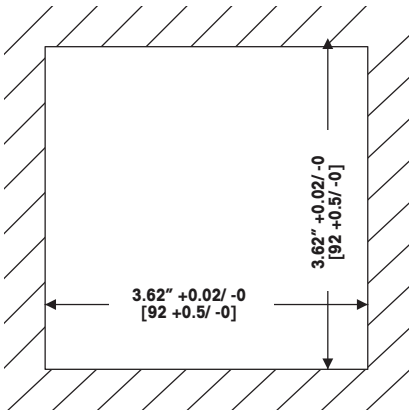

Dimensions in inches [mm]

Dimensions for 1/2 DIN wall/panel-mount models

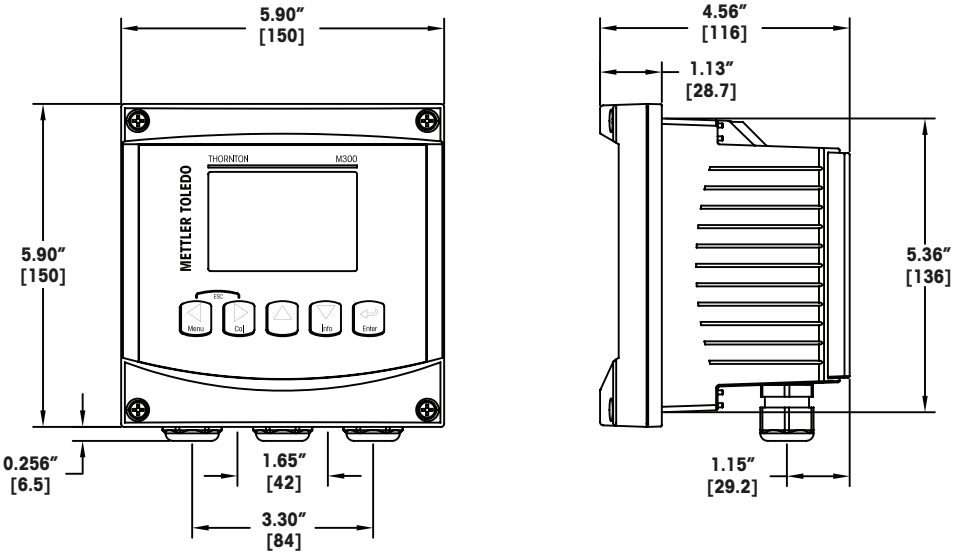

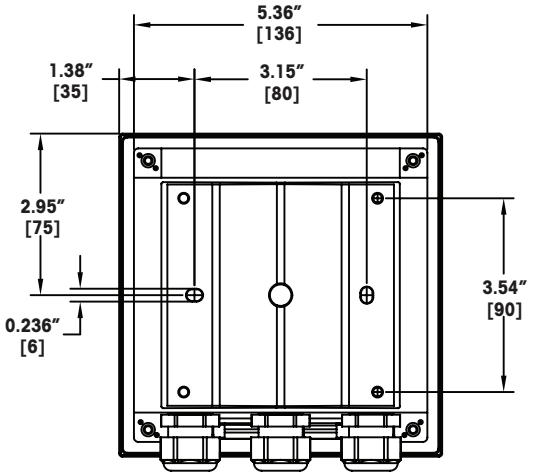

Panel Cutout Dimensions

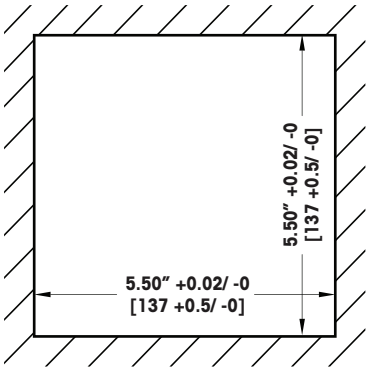

Dimensions for 1/2 DIN pipe mount kit

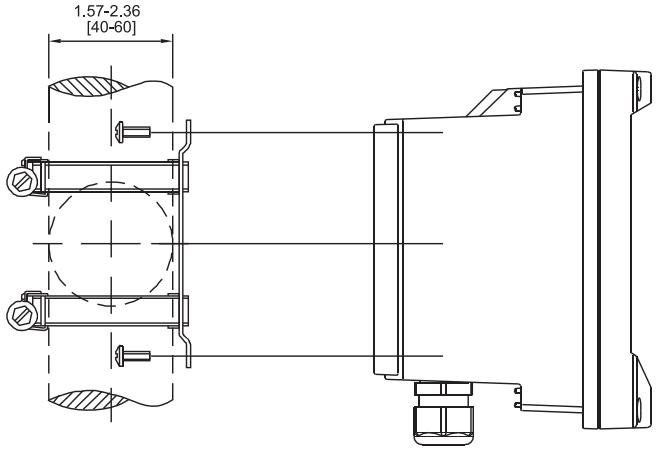

Dimensions in inches [mm]

Ordering Information

M300 ISM Transmitters

Description		Part Number
1/4 DIN enclosure – panel mounting kit included		
M300 ISM	1-channel Multiparameter	**58 000 301**
M300 ISM	2-channel Multiparameter	**58 000 302**
1/2 DIN enclosure – panel/wall/pipe mount*		
M300 ISM	1-channel Multiparameter	**58 000 311**
M300 ISM	2-channel Multiparameter	**58 000 312**

* Panel and pipe mounting require kits, listed below, ordered separately.

Accessories

Description	Part Number
Panel Mount Kit for 1/2 DIN models	**52 500 213**
Pipe Mount Kit for 1/2 DIN models	**52 500 212**
ISM Conductivity Calibration Module	**58 082 305**
Adapter Panel - M300 to 200/2000 cutout	**58 083 305**

M300 ISM Sensor Cables

Thornton Conductivity	Part Number
1 ft (0.3 m)	**58 080 270**
5 ft (1.5 m)	**58 080 271**
10 ft (3.0 m)	**58 080 272**
15 ft (4.5 m)	**58 080 273**
25 ft (7.6 m)	**58 080 274**
50 ft (15.2 m)	**58 080 275**
100 ft (30.5 m)	**58 080 276**
150 ft (45.7 m)	**58 080 277**
200 ft (61.0 m)	**58 080 278**
300 ft (91.4 m)	**58 080 279**

pH/ORP/DO	Part Number
3 ft (1 m)	**(10 000 0102) 59 902 167**
10 ft (3 m)	**(10 000 0302) 59 902 193**
16 ft (5 m)	**(10 000 0502) 59 902 213**
33 ft (10 m)	**(10 000 1002) 59 902 230**

UniCond™ Conductivity Sensor Calibration Module

- Includes resistances for all ranges of conductivity/resistivity and temperature
- Connects between UniCond™ conductivity sensor and M300 ISM transmitter
- With NIST-traceable certificate of calibration
- Enables efficient QA program

Description	Accuracy	Part No.
ISM Conductivity Calibration Module	± 0.08%	**58 082 305**



Visit for more information

Mettler-Toledo Thornton, Inc.
36 Middlesex Turnpike
Bedford, MA 01730 USA

Quality certificate.
Development, production and testing to ISO 9001.

A certified ServiceXXL provider.

CE Compliant

UL listed
Meets Canadian Standards

Subject to technical changes
© Mettler-Toledo Thornton, Inc.
ML0140 Rev. D 05/10

Consultas y ventas: AQUAREP · www.aquarep.com.ar · info@aquarep.com.ar · WhatsApp +54 9 11 6091-0087