Analytical Transmitters

LENNTECH
Water Treatment Solutions

INGOLD
Leading Process Analytics

THORNTON
Leading Pure Water Analytics



M200 Transmitters

- Conductivity/Resistivity
- pH/ORP
- Dissolved Oxygen
- Dissolved Ozone
- Flow

ISM®



M200 Transmitters

for Basic Water and Process Applications

METTLER TOLEDO

Consultas y ventas: AQUAREP · www.aquarep.com.ar · info@aquarep.com.ar · WhatsApp +54 9 11 6091-0087

Convenient and Reliabile
for basic water and process applications

The METTLER TOLEDO M200 series of basic analytical instruments provides single and dual channel multi-parameter models to measure conductivity/resistivity, pH/ORP, dissolved oxygen, dissolved ozone and flowrate.

Features



- Large backlit 4-line display
- Compact ¼ DIN panel-mounting with IP65 panel seal
- Robust ½ DIN wall-mounting with IP65 back cover
- User-selectable dual-level password protection
- USB port for configuration and data acquisition
- Plug and measure sensor inputs and operation for all parameters
- Compatible with easySense and a range of ISM sensors
- Plug-in terminal connectors for easy wiring
- Universal AC/DC power supply
- Multiple languages: English, French, German, Italian, Spanish, Portuguese, Russian and Japanese
- CE compliant, UL Listed for US and Canadian standards

Applications

Pure and ultrapure water treatment for semiconductor rinsing, critical power/steam makeup and pharmaceutical waters.

Semiconductor processing in rinsers and wet benches with precise resistivity measurement and temperature compensation.

Power plant cycle chemistry and stator cooling monitoring with exceptionally accurate temperature compensation for specific and cation conductivity and pH and very low maintenance dissolved oxygen measurement.

Pharmaceutical water monitoring to meet USP, EP, ChP, IP and JP conductivity requirements including built in tables of alarm limits.

Reclaim, recycle and wastewater treatment for the above industry applications for contaminant detection, diversion and neutralization.

M200 Multi-parameter Transmitter

Exceeding Expectations for Routine Measurements

The M200 transmitter line provides exceptional ease-of-use for measuring various parameters in the process analytics. These include conductivity/resistivity, pH/ORP, dissolved oxygen, dissolved ozone and flow. The M200 is fully compatible with the easySense sensor line and a range of ISM sensors. Plug and Measure feature provides fast and error free sensor installation. A large four line backlit LCD display conveys measuring data and setup information. The menu structure allows the operator to modify all operational parameters by using keys on the front panel. User management, with password protection, prevent the unauthorized access to the transmitter.

The M200 multi-parameter transmitter can be configured to use its up to 4 analog outputs and/or 2 relays for process control.



The M200 transmitter is equipped with a USB interface for on-site firmware update or configuration. Using the Windows based TCT software tool (included with each transmitter) commissioning and maintenance is easy.



Simple Handling

- M200 is designed for easy operation and reliable measurement.
- Large LCD display with plain text interface.
- Easily accessible wiring terminals and quick setup menu.
- Dedicated flow models provide a family.



Versatile

- Accepts all digital easySense sensors and a range of ISM sensors.
- Multi-parameter transmitter for pH, O_2, O_3 and conductivity.
- M200 single or dual channel version, panel or wall mounting.



Convenient

- Fast commissioning and error-free start-up due to Plug and Measure feature.
- Pre-calibrated sensors with iSense can be immediately put to use.
- Minimal sensor configuration is needed.



Economical solution

- M200 with its excellent price/performance ratio minimizes the costs of ownership.
- Configuration via PC and the free transmitter configuration tool (TCT) saves time.
- USB interface for configuration and firmware update.

M200 Multi-parameter Transmitter



- One or two field-configurable plug & measure channels for any available measurement parameters
- Selected ISM/digital sensors for Conductivity/resistivity, pH/ORP, and/or dissolved oxygen
- Reduces number of instruments and amount of panel space

Physical and Electrical Specifications

Enclosure/Power		
Operator interface	4 line back-lit LCD; 5-tactile keys	
1/4 DIN Model Dimensions (H x W x D)	4.01 x 4.01 x 5.51 in (102 x 102 x 140 mm)	
Max. Depth,- panel mounted	4.96 in (126 mm), excluding plug-in connectors	
1/2 DIN Model Dimensions (H x W x D)	5.90 x 5.90 x 4.57 in (150 x 150 x 116 mm)	
Max. Depth,- panel mounted	3.46 in (88 mm)	
Material	Polycarbonate	
Weight, 1/4 DIN Models	1.5 lb (0.7 kg)	
Weight, 1/2 DIN Models	2 lb (1 kg)	
UL Electrical Environment	Installation (overvoltage) Category II	
Ratings/Approvals	UL listed, CE compliant; IP 65 - 1/2 DIN wall mount and 1/4 DIN panel seal	
EMC	Compliant with EN61326-1:2013 (Industrial Environment Emission: Class B, Immunity: Class A)	
Power	Universal 100-240 VAC, 50-60 Hz or 20-30 VDC; 5 W (on power loss, all settings are retained in non-volatile memory without batteries)	
Environmental		
Storage temperature	-40 to 70 °C (-40 to 158 °F)	
Ambient temperature operating range	-10 to 50 °C (14 to 122 °F)	
Relative humidity	0 to 95%	
Outputs/Inputs		
Analog outputs (as specified for individual models)	Powered 0/4-20 mA, 22 mA alarm, 500 ohms maximum load; not for use with externally powered circuits	
Analog output accuracy	± 0.05 mA	
Analog output scaling	Linear	
Relays (as specified for individual models)	All contacts are potential free, with adjustable hysteresis and time delay	
SPDT	250 VAC/30 VDC, 3 A, resistive	
Digital communications	USB, type B connector, for remote configuration and data acquisition with TCT software	
Discrete input (as specified for individual models)	Accepts dry contact closure for remote PID control auto/manual selection	
Outputs – see p. 4 for ratings	**One Channel**	**Two Channel**
Setpoints/Alarms	4 - high, low, outside, between, USP or EP	6 - high, low, outside, between, USP or EP
Relays	2 - SPDT	2 SPDT
Analog Output Signals	2	4
Discrete Inputs	1	2

See Mettler-Toledo Process Analytics easySense and Analytical Sensor datasheets for sensor/measurement specifications.

M200 Multi-parameter Transmitter

Dimensions for 1/4 DIN panel-mount models

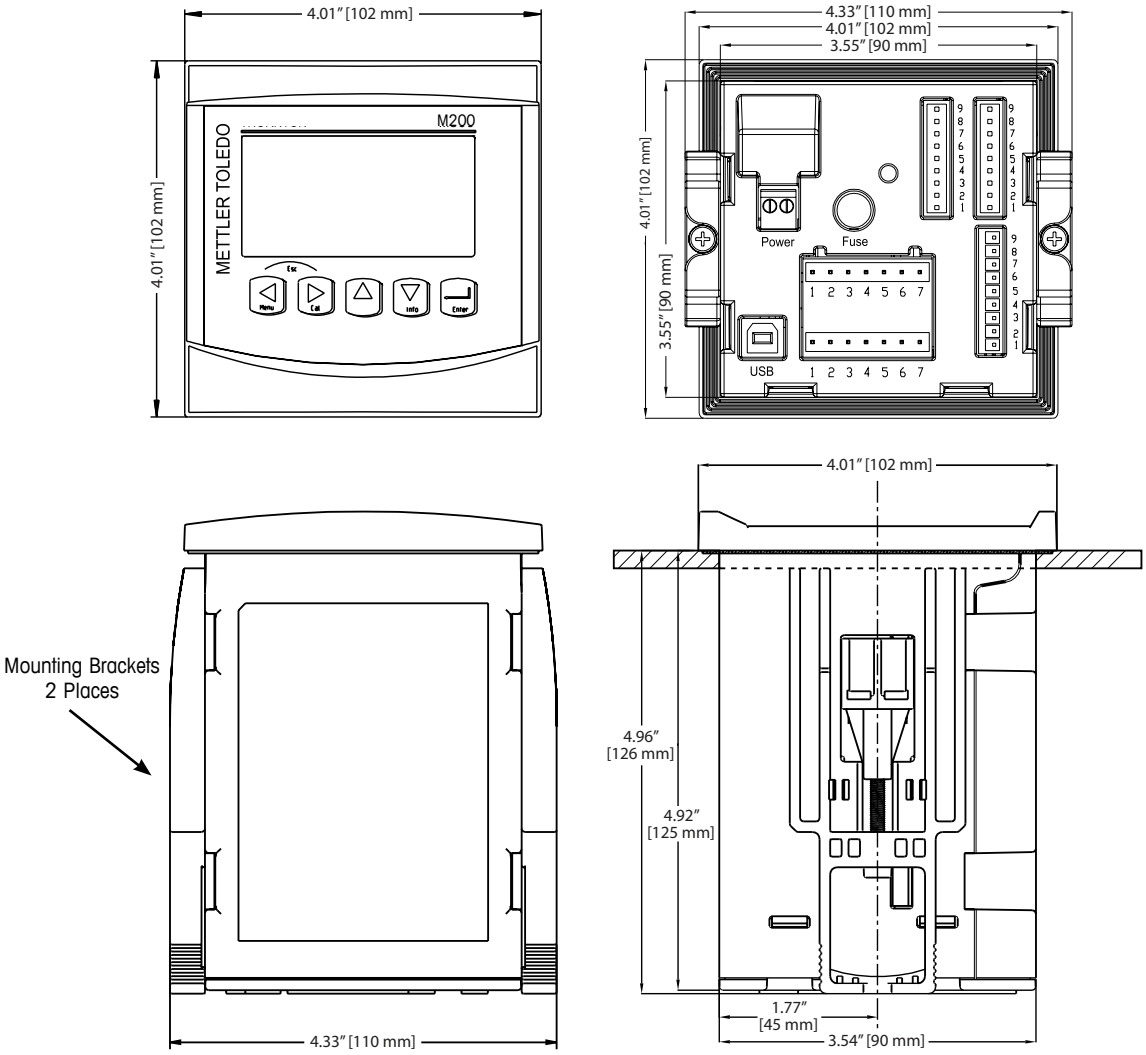

Dimensions for ¼ DIN panel cutout

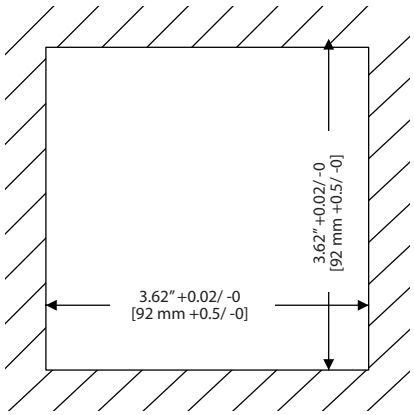

Dimensions for 1/2 DIN wall/panel-mount models

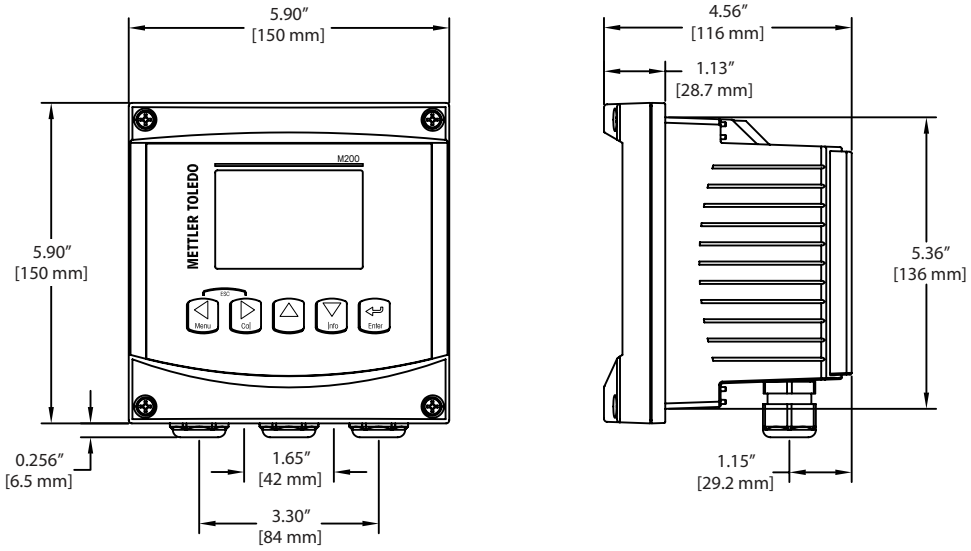

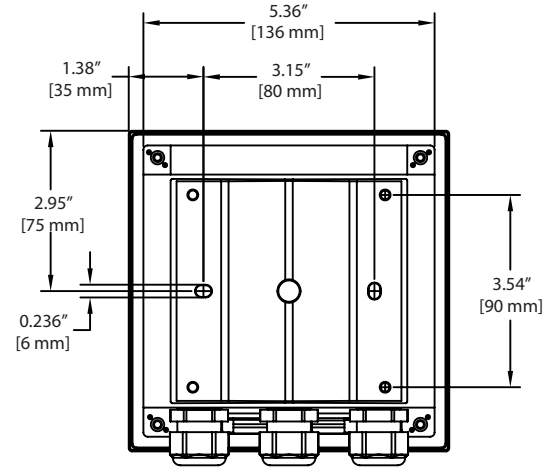

Panel Cutout Dimensions

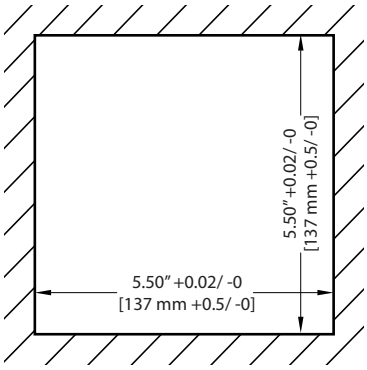

Dimensions for 1/2 DIN pipe mount kit

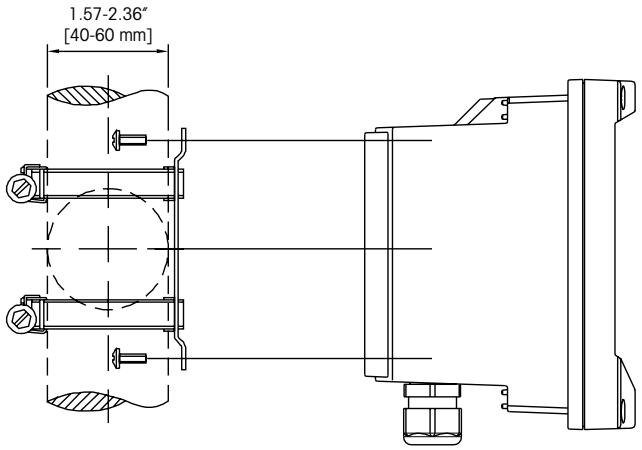

M200 Flow Models

- Available in one and four channel models
- Available in 1/4 DIN enclosure only
- Accept input from most pulse flow sensors
- Compute total flow with high resolution
- Configurable for batch control
- Compute reverse osmosis % recovery on four channel model



Measurement Specifications

Functional		
Flowrate Range	0 to 9999 GPM, L/min, m^3/hr	
Total Flow Range	0 to 999,999,999 Gallons, 999,999,999 Liters, 999,999,999 m^3	
RO % Recovery Range	0 to 100%	
Flow Velocity Range	Equivalent ft/s, m/s	
Frequency Range	1 to 4000 Hz	
Calculated Parameters (4-channel)	Ratio, sum and difference of two flowrates	
Resolution	4 significant digits, auto-ranged; up to 8 digits for total flow	
Update rate	Display and outputs, once per 2 seconds	
Input pulses	Low <1.0 volt; high >1.4 volts (36 volts max)	
Performance		
Accuracy	± 0.5 Hz	
Repeatability	± 0.2 Hz	
Outputs/Inputs	**Single channel**	**Four channel**
Setpoints/Alarms	4 - high, low, outside, or between	8 - high, low, outside, or between
Relays	2 SPDT, 1 SPST NO, 1 SPST NC	2 SPDT, 1 SPST NO, 1 SPST NC
Analog Output Signals	2	4
Discrete Inputs, for external totalizer reset	1	2

Ordering Information

M200 Transmitters

Description		Part Number
1/4 DIN enclosure – panel mounting kit included		
M200	1-channel Multi-parameter	**52 121 554**
M200	2-channel Multi-parameter	**52 121 556**
1/2 DIN enclosure – panel/wall/pipe mount*		
M200	1-channel Multi-parameter	**52 121 555**
M200	2-channel Multi-parameter	**52 121 557**

* Panel and pipe mounting require kits, listed below, ordered separately.

M200 Flow Transmitters

Description		Part Number
1/4 DIN enclosure – panel mounting kit included		
M200 Flow	1-channel Multi-parameter	**30 280 748**
M200 Flow	2-channel Multi-parameter	**30 280 749**

Accessories

Description	Part Number
Panel Mount Kit for 1/2 DIN models	**52 500 213**
Pipe Mount Kit for 1/2 DIN models	**52 500 212**
ISM Conductivity Calibration Module	**58 082 305**
Adapter Panel - M200 to 200/2000 cutout	**58 083 305**

ISM Sensor Cables

Thornton Conductivity	Part Number
1 ft (0.3 m)	**58 080 270**
5 ft (1.5 m)	**58 080 271**
10 ft (3.0 m)	**58 080 272**
15 ft (4.5 m)	**58 080 273**
25 ft (7.6 m)	**58 080 274**
50 ft (15.2 m)	**58 080 275**
100 ft (30.5 m)	**58 080 276**
150 ft (45.7 m)	**58 080 277**
200 ft (61.0 m)	**58 080 278**
300 ft (91.4 m)	**58 080 279**

pH/ORP/DO	Part Number
3 ft (1 m)	**(10 000 0102) 59 902 167**
10 ft (3 m)	**(10 000 0302) 59 902 193**
16 ft (5 m)	**(10 000 0502) 59 902 213**
33 ft (10 m)	**(10 000 1002) 59 902 230**

Note: easySense sensors include cable from sensor to transmitter

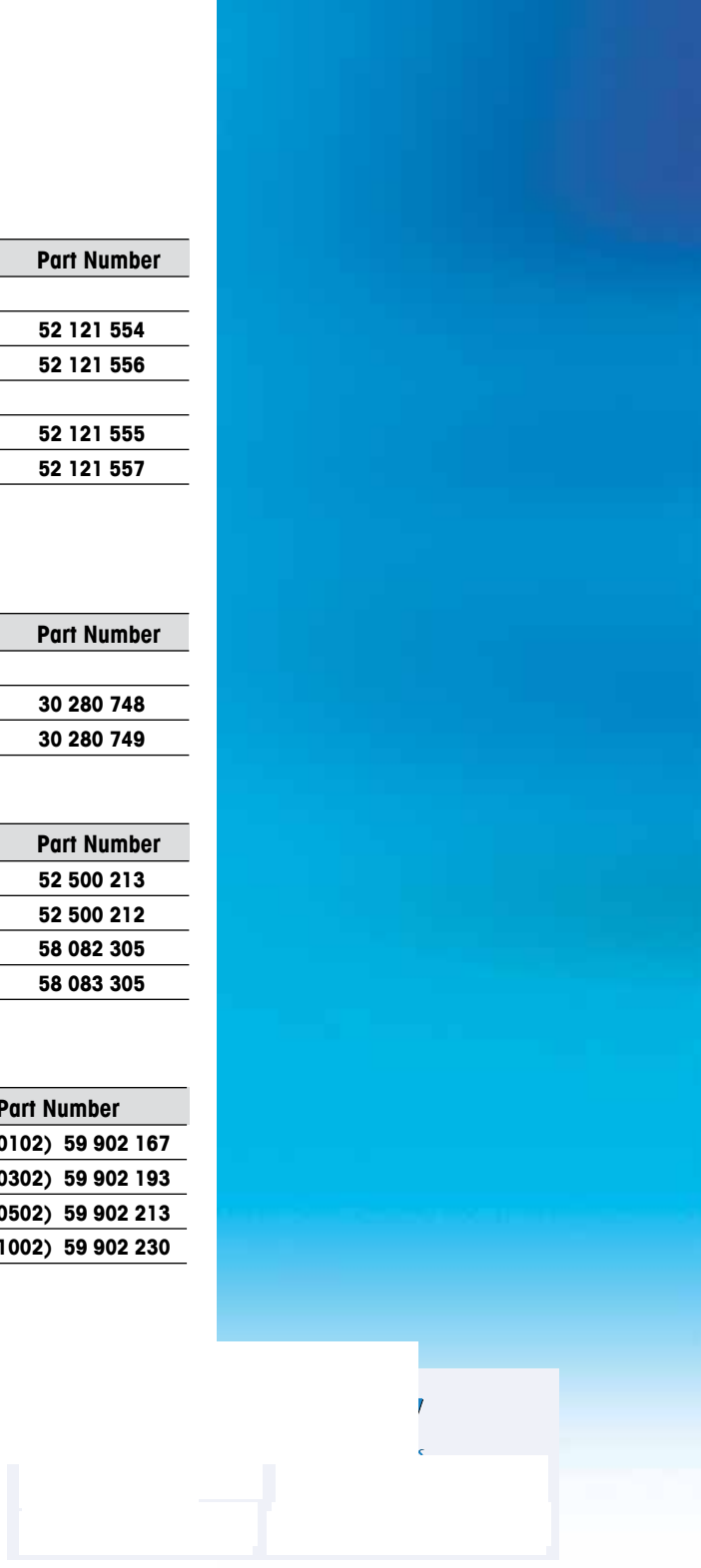

Visit for more information

Mettler-Toledo Thornton, Inc.

Mettler-Toledo GmbH
Process Analytics

Quality certificate.
Development, production and testing to ISO 9001.

A certified ServiceXXL provider.

CE Compliant

UL listed
Meets Canadian Standards

Subject to technical changes
© Mettler-Toledo Thornton, Inc.
58 087 056 Rev. A 12/15

Consultas y ventas: AQUAREP · www.aquarep.com.ar · info@aquarep.com.ar · WhatsApp +54 9 11 6091-0087