Nitto
Innovation for Customers

HYDRANAUTICS

Submerged Ultrafiltration Membrane Module

	HYDRAsub™MAX-MBR	HSMM600-ES
Module Specifications	Configuration:	Submerged Membrane
	Fiber Orientation:	Vertical
	Filtrate Flow :	Bi-directional
	Membrane Polymer:	Polyvinylidene Flouride (PVDF)
	Pore Size (nominal):	0.05 µm
	Number of Elements in Module:	15 (40 m^2 each)
	Nominal Membrane Area per Module:	6456 ft^2 (600 m^2)
	Permeate Connections:	(2)- 2” MNPT Connections
	Air Connections:	(2)- 2” MNPT Connections
	Guide Pipe Connections:	(2)- To fit 3” pipe
	Typical Module Dry Weight:	837 lbs (381 kg)
	Typical Module Wet Weight:	1631 lbs (740 kg)
Operating Specifications	Maximum Trans Membrane Pressure (Vacuum):	-6 psig (-0.41 bar)
	Maximum Backwash Trans Membrane Pressure :	2 psig (0.14 bar)
	Maximum Instantaneous Chlorine Concentration:	5,000 ppm[a]
	Maximum Chlorine Tolerance:	742,000 ppm-hrs[b]
	MLSS Range:	8,000 - 12,000 mg/L[c]
	Operating Temperature Range:	41 - 104ºF (5 - 40º C)
	Feed Water pH Range:	6.0 - 8.0
	Cleaning pH Range:	1.0 - 11.0
	Operating Mode:	Outside to Inside
Typical Process Conditions	Operating Filtrate Flux†:	4-20 gfd (7-34 lmh)
	Peak Operating Flux†:	30 gfd (51 lmh)
	Chemically Enhanced Backwash (CEB) Flux:	2.4 gfd (4 lmh)
	CEB Chemicals:	NaOCl[d]
	Clean In Place (CIP) Flux:	2.4 gfd (4 lmh)
	CIP Chemicals:	NaOCl or Citric Acid[d]

† -Depends on temperature and application.
a -For a maximum of 2 hours.
b- Maximum chemical tolerance for estimated life span of membrane.
c -In membrane tank at steady state for municipal wastewater.
d- Refer to operating manual for chemical concentrations and cleaning frequencies.

Hydranautics believes that the information and data contained herein to be accurate and useful. The information and data are offered in good faith, but without guarantee, as conditions and methods of use of our products are beyond our control. Hydranautics assumes no liability for results obtained or damages incurred through the application of the presented information and data. It is the user’s responsibility to determine the appropriateness of Hydranautics’ products for the user’s specific end uses.

Hydranautics Corporate office

Web: Email:

Consultas y ventas: AQUAREP · www.aquarep.com.ar · info@aquarep.com.ar · WhatsApp +54 9 11 6091-0087

Top View

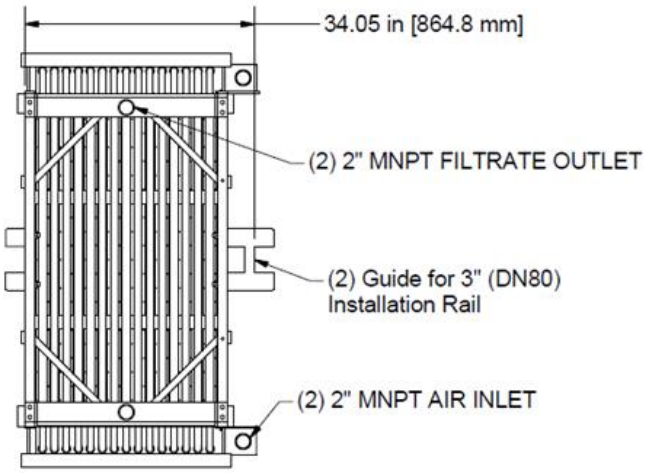

Isometric View

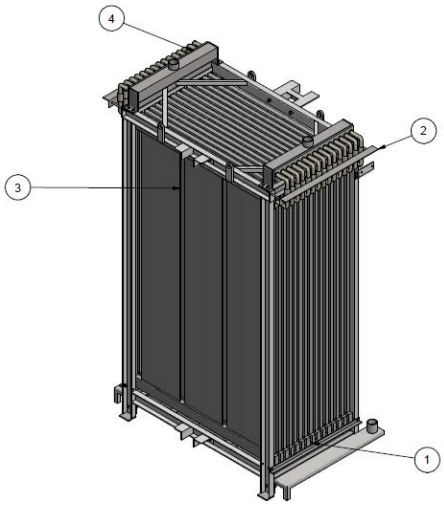

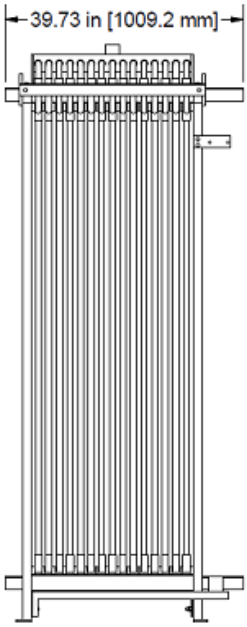

Side View

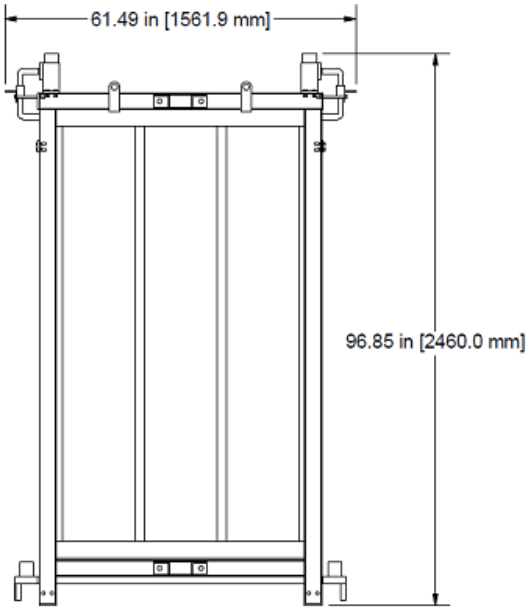

Front View

HYDRAsub-MBR Parts List to Order 600m² w/ HSME40			
Item #	**Qty**	**Part Number**	**Description**
1	1	HSMC600-ES*	HYDRAsub Cage SS304
2	30	HSA25	HYDRAsub Filtrate Adapter
3	15	HSME40	HYDRAsub Element
4	0	HSP	HYDRAsub Plug

Note: Cage is made of stainless steel 304. Connections are in English units. For more detailed drawings, contact Hydranautics.
*SS316 Cage part number – HSMC600-ES-316

2/6/2024

Hydranautics Corporate office

Web: Email:

Consultas y ventas: AQUAREP · www.aquarep.com.ar · info@aquarep.com.ar · WhatsApp +54 9 11 6091-0087