Nitto
Innovation for Customers

HYDRANAUTICS

# Submerged Ultrafiltration Membrane Module

| | | HYDRAsub™ MAX- MBR HSMM2400-ES |
|---|---|---|
| **Module Specifications** | Configuration: | Submerged Membrane |
| | Fiber Orientation: | Vertical |
| | Filtrate Flow : | Bi-directional |
| | Membrane Polymer: | Polyvinylidene Flouride (PVDF) |
| | Pore Size (nominal): | 0.05 µm |
| | Number of Elements in Module: | 60 (40 $m^2$ each) |
| | Nominal Membrane Area per Module: | 25824 $ft^2$ (2400 $m^2$) |
| | Permeate Connections: | (4)- 3” MNPT |
| | Air Connections: | (4)- 2” MNPT |
| | Guide Pipe Connections: | (2)- To fit 3” pipe |
| | Typical Module Dry Weight: | 3636 lbs (1652 kg) |
| | Typical Module Wet Weight: | 5634 lbs (2555 kg) |
| **Operating Specifications** | Maximum Transmembrane Pressure (Vacuum): | -6 psig (-0.41 bar) |
| | Maximum Backwash Pressure : | 2 psig (0.14 bar) |
| | Maximum Instantaneous Chlorine Concentration: | 5,000 ppm[a] |
| | Maximum Chlorine Tolerance: | 742,000 ppm-hrs[b] |
| | MLSS Range: | 8,000 - 12,000 mg/L[c] |
| | Operating Temperature Range: | 41 - 104ºF (5 - 40º C) |
| | Feed Water pH Range: | 6.0 - 8.0 |
| | Cleaning pH Range: | 1.0 - 11.0 |
| | Operating Mode: | Outside to Inside |
| **Typical Process Conditions** | Operating Filtrate Flux†: | 4-20 gfd (7-34 lmh) |
| | Peak Operating Flux†: | 30 gfd (51 lmh) |
| | Chemically Enhanced Backwash (CEB) Flux: | 2.4 gfd (4 lmh) |
| | CEB Chemicals: | NaOCl [d] |
| | Clean In Place (CIP) Flux: | 2.4 gfd (4 lmh) |
| | CIP Chemicals: | NaOCl or Citric Acid[d] |

† -Depends on temperature and application
a -For a maximum of 2 hours
b- Maximum chemical tolerance for estimated life span of membrane
c -In membrane tank at steady state for municipal wastewater
d- Refer to operating manual for chemical concentrations and cleaning frequencies

Hydranautics believes that the information and data contained herein to be accurate and useful. The information and data are offered in good faith, but without guarantee, as conditions and methods of use of our products are beyond our control. Hydranautics assumes no liability for results obtained or damages incurred through the application of the presented information and data. It is the user’s responsibility to determine the appropriateness of Hydranautics’ products for the user’s specific end uses.

**Hydranautics Corporate office**

Web: Email:

Consultas y ventas: AQUAREP · www.aquarep.com.ar · info@aquarep.com.ar · WhatsApp +54 9 11 6091-0087

## Top View

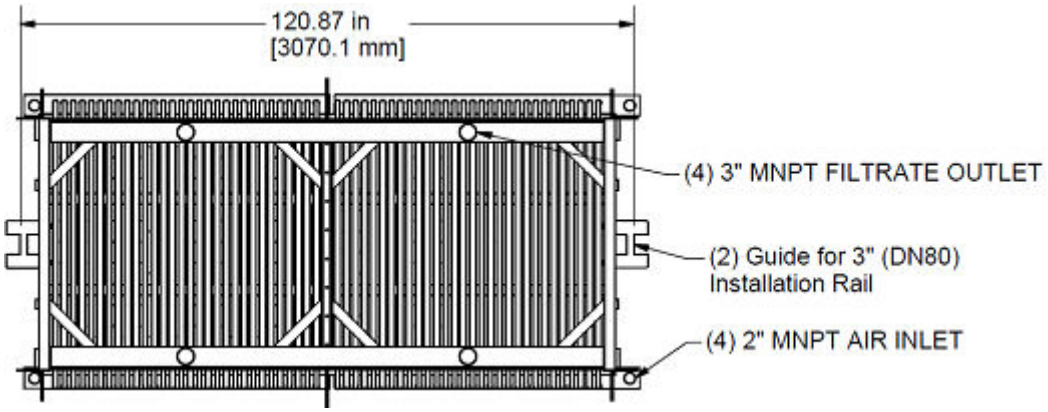


## Isometric View

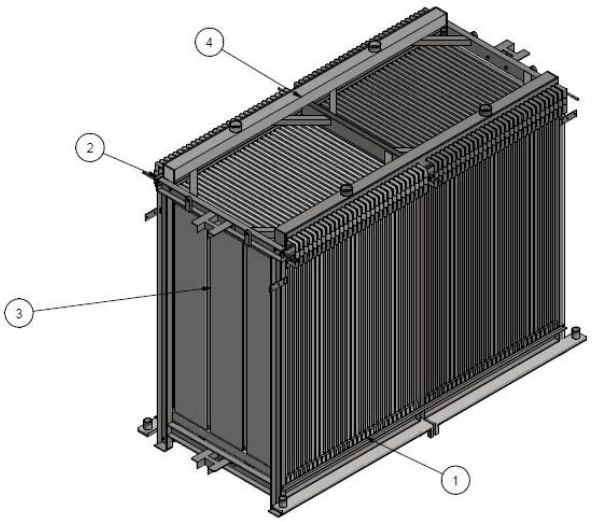


## Side View

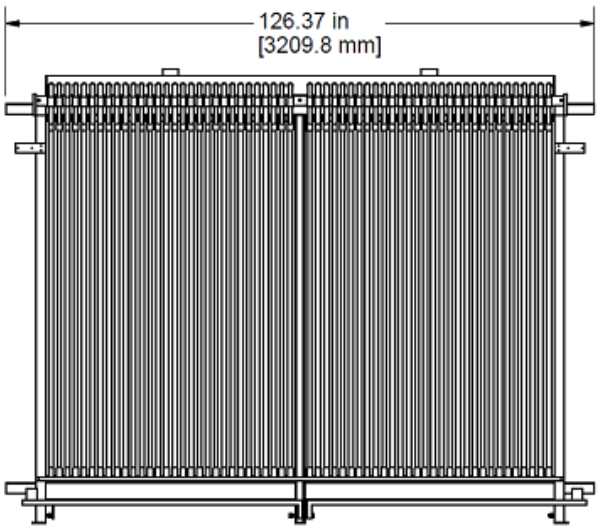


## Front View

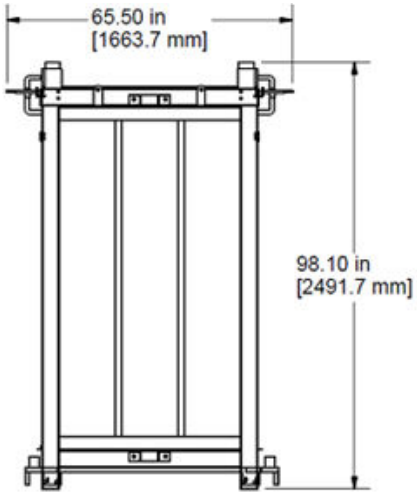


| HYDRAsub-MBR Parts List to Order 2400m² w/ HSME40 | | | |
|---|---|---|---|
| **Item #** | **Qty** | **Part Number** | **Description** |
| 1 | 1 | HSMC2400-ES* | HYDRAsub Cage SS304 |
| 2 | 120 | HSA25 | HYDRAsub Filtrate Adapter |
| 3 | 60 | HSME40 | HYDRAsub Element |
| 4 | 0 | HSP | HYDRAsub Plug |

Note: Cage is made of stainless steel 304. Connections are in English units.
*SS316 Cage part number – HSMC2400-ES-316
For more detailed drawings, contact Hydranautics.

2/6//2024

**Hydranautics Corporate office**

Web: Email:

Consultas y ventas: AQUAREP · www.aquarep.com.ar · info@aquarep.com.ar · WhatsApp +54 9 11 6091-0087