Nitto
Innovation for Customers

HYDRANAUTICS

Submerged Microfiltration Membrane Bioreactor (MBR) Module

	HYDRAsub™- MBR	HSM1500-ES
Module Specifications	Configuration:	Submerged Membrane
	Fiber Orientation:	Vertical
	Filtrate Flow :	Bi-directional
	Membrane Polymer:	Polyvinylidene Flouride (PVDF)
	Pore Size (nominal):	0.4 µm
	Number of Elements in Module:	60 (25 m^2 each)
	Nominal Membrane Area per Module:	16140 ft^2 (1500 m^2)
	Permeate Connections:	(4)- 3” MNPT
	Air Connections:	(4)- 2” MNPT
	Guide Pipe Connections:	(2)- To fit 3” pipe
	Typical Module Dry Weight:	3542 lbs (1610 kg)
	Typical Module Wet Weight:	5634 lbs (2555 kg)
Operating Specifications	Maximum Transmembrane Pressure (Vacuum):	-6 psig (-0.41 bar)
	Maximum Backwash Pressure :	2 psig (0.14 bar)
	Maximum Instantaneous Chlorine Concentration:	5,000 ppm[a]
	Maximum Chlorine Tolerance:	742,000 ppm-hrs[b]
	MLSS Range:	8,000 - 12,000 mg/L[c]
	Operating Temperature Range:	41 - 104ºF (5 - 40º C)
	Feed Water pH Range:	6.0 - 8.0
	Cleaning pH Range:	1.0 - 11.0
	Operating Mode:	Outside to Inside
Typical Process Conditions	Operating Filtrate Flux†:	4-20 gfd (7-34 lmh)
	Peak Operating Flux†:	30 gfd (51 lmh)
	Chemically Enhanced Backwash (CEB) Flux:	2.4 gfd (4 lmh)
	CEB Chemicals:	NaOCl [d]
	Clean In Place (CIP) Flux:	2.4 gfd (4 lmh)
	CIP Chemicals:	NaOCl or Citric Acid[d]

† -Depends on temperature and application
a -For a maximum of 2 hours
b- Maximum chemical tolerance for estimated life span of membrane
c -In membrane tank at steady state for municipal wastewater
d- Refer to operating manual for chemical concentrations and cleaning frequencies

Hydranautics believes that the information and data contained herein to be accurate and useful. The information and data are offered in good faith, but without guarantee, as conditions and methods of use of our products are beyond our control. Hydranautics assumes no liability for results obtained or damages incurred through the application of the presented information and data. It is the user’s responsibility to determine the appropriateness of Hydranautics’ products for the user’s specific end uses.

Hydranautics Corporate office

Web: Email:

Consultas y ventas: AQUAREP · www.aquarep.com.ar · info@aquarep.com.ar · WhatsApp +54 9 11 6091-0087

Top View

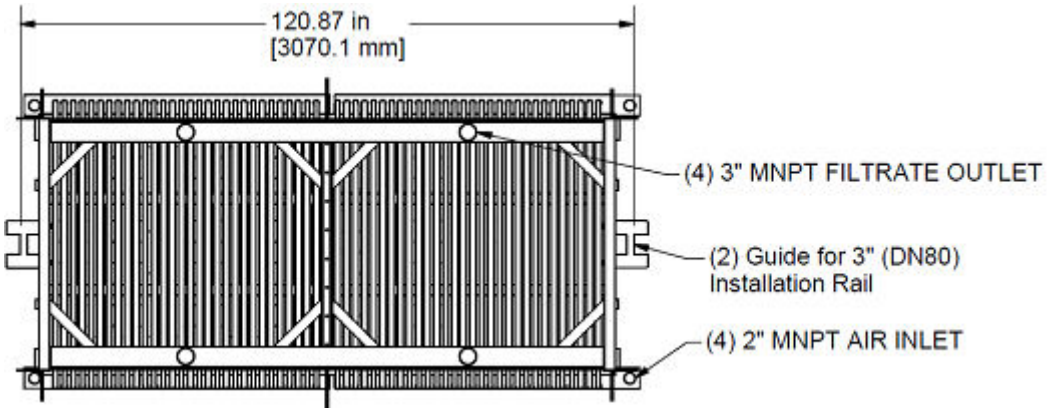

Isometric View

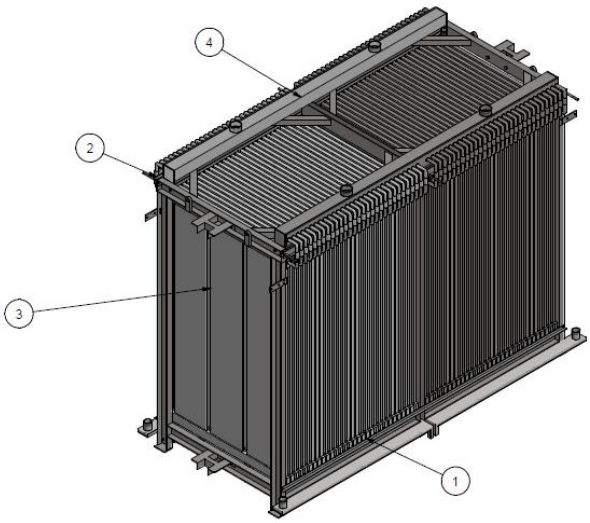

Side View

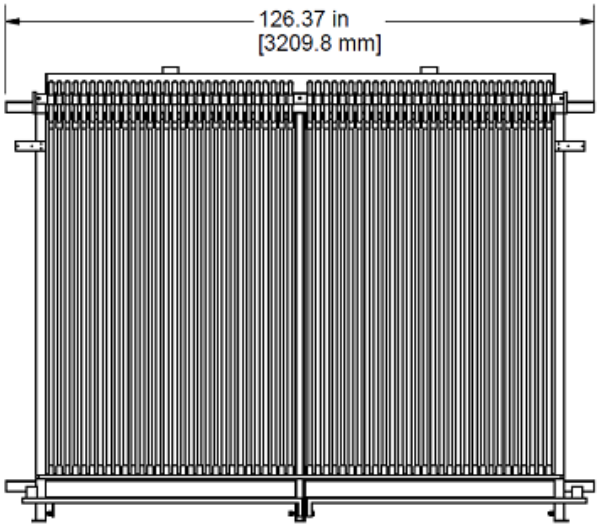

Front View

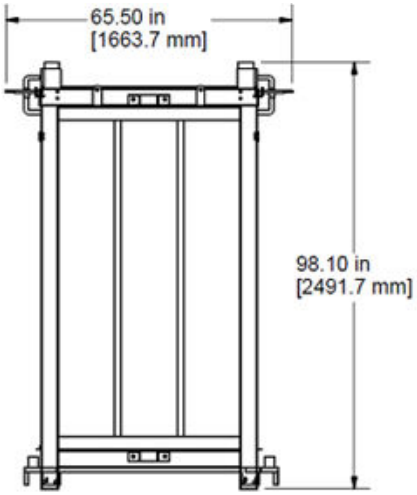

HYDRAsub-MBR Parts List to Order 1500m² w/ HSE25			
Item #	**Qty**	**Part Number**	**Description**
1	1	HSMC1500-ES*	HYDRAsub Cage SS304
2	120	HSA25	HYDRAsub Filtrate Adapter
3	60	HSE25	HYDRAsub Element
4	0	HSP	HYDRAsub Plug

Note: Cage is made of stainless steel 304. Connections are in English units.
*SS316 Cage part number – HSC1500-ES-316
For more detailed drawings, contact Hydranautics.

2/6/2024

Hydranautics Corporate office

Web: Email:

Consultas y ventas: AQUAREP · www.aquarep.com.ar · info@aquarep.com.ar · WhatsApp +54 9 11 6091-0087