HACH®
Be Right™

SC4500 Digital/Analog Controller

Applications
- Wastewater
- Drinking Water
- Industrial
- Other



Ready for Now. Ready for the Future.

Technologies are advancing rapidly, providing new levels of convenience, accuracy, and efficiency. Which is exactly why the SC4500 Controller from Hach® is designed to integrate easily into your current system while allowing you to upgrade as your capabilities advance, without having to replace inventory. With a wide range of analog and digital connectivity options and the availability of intelligent instrument and data management features, the SC4500 unlocks the future, today.

Easy Adoption

The familiar experience of a modern touchscreen, the ability to use your current Hach sensors, and the same footprint as the SC200, make installation and integration of the SC4500 Controller seamless.

No Time for Downtime

The SC4500's built-in predictive diagnostic software ensures measurement confidence and reduces the risk of unexpected equipment downtime by enabling proactive maintenance planning via MSM, including step-by-step instructions.

The Connectivity Options You Need

The Controller is Smart Monitoring enabled and provides local communication to SCADA or a PLC. From analog and advanced digital protocols to Wi-Fi, cellular or LAN, the SC4500 gives you the flexibility to adapt in a rapidly changing world.

Consultas y ventas: AQUAREP · www.aquarep.com.ar · info@aquarep.com.ar · WhatsApp +54 9 11 6091-0087

Technical Data*

Description	Microprocessor-controlled and menu-driven controller that operates the sensor
Dimensions	½ DIN - 144 x 144 x 192 mm (5.7 x 5.7 x 7.6 in.)
Weight	1.7 kg (3.7 lb) (controller only, w/o modules)
Display	3.5-inch TFT color display with capacitive touchpad
Enclosure Rating	UL50E type 4X, IEC/EN 60529–IP 66, NEMA 250 type 4X Metal enclosure with a corrosion-resistant finish
Operating Temperature Range	-20 - 60 °C (-4 - 140 °F) (8 W (AC)/9 W (DC) sensor load) -20 - 45 °C (-4 - 113 °F) (28 W (AC)/20 W (DC) sensor load) Linear derating between 45 and 60 °C (-1.33 W/°C)
Storage Conditions	-20 - 70 °C (-4 - 158 °F), 0 - 95% relative humidity, non-condensing
Altitude	3000 m (9842 ft) maximum
Installation Category	Category II
Indoor/Outdoor	Outdoor installation in direct sunlight or UV radiation requires UV protection screen and/or sunroof
Pollution Degree	4
Protection Class	I, connected to protective earth
Power requirements	AC controller: 100-240 VAC ±10%, 50/60 Hz; 1 A (28 W sensor load) DC controller: 24 VDC +15% -20%; 2.5 A (20 W sensor load)
Measurements	Two device digital SC connectors
Relays	Two relays (SPDT); Wire gauge: 0.75 - 1.5 mm^2 (18 - 16 AWG) AC controller Maximum switching voltage: 100 - 240 VAC Maximum switching current: 5 A Resistive/1 A Pilot Duty Maximum switching power: 1200 VA Resistive/360 VA Pilot Duty DC controller Maximum switching voltage: 30 VAC or 42 VDC Maximum switching current: 4 A Resistive/1 A Pilot Duty Maximum switching power: 125 W Resistive/28 W Pilot Duty Optional Four relays (SPDT); Wire gauge 0.08 - 1.5 mm^2 (28 - 16 AWG) Maximum switching voltage: 30 VDC Maximum switching current: 1 A Resistive Maximum switching power: 30 W Resistive
Communication (optional)	Analog: Five 0 - 20 mA or 4 - 20 mA analog outputs on each analog output module Up to two analog Input modules (0 - 20 mA or 4 - 20 mA). Each input module replaces a digital sensor input. Digital: Profibus DPV1 module with S2 redundancy Modbus TCP Modbus RS Profinet IO module Ethernet IP module HART module
Network Connectivity	Optional: LAN: Two Ethernet connectors (10/100 Mbps) Cellular: External 4G Wi-Fi
USB Port	Used for data download and software upload. The controller records approximately 20,000 data points for each connected sensor.
Compliance Certifications	CE. ETL certified to UL and CSA safety standards (with all sensor types), FCC, ISED, KC, RCM, EAC, UKCA, SABS, C م (Morocco) C1D2 (available for specific models and North-America only)
BABA	For part numbers with a U.S. COO Controller, within the USA only
Warranty	12 months
Compatible Network Technologies	GSM 3G/4G (e.g. AT&T, T-Mobile, Rogers, Vodafone etc.) CDMA (e.g. Verizon)

**Subject to change without notice.*

Dimensions

Panel mounting dimensions

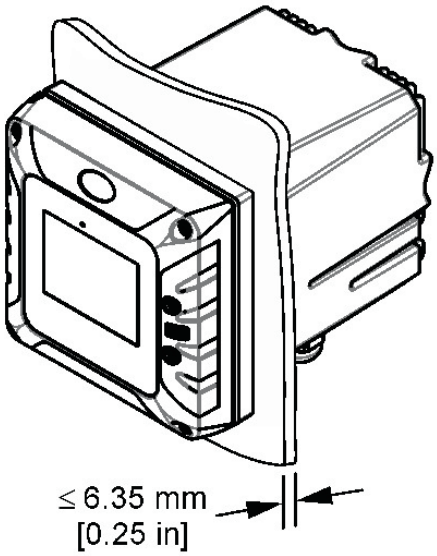

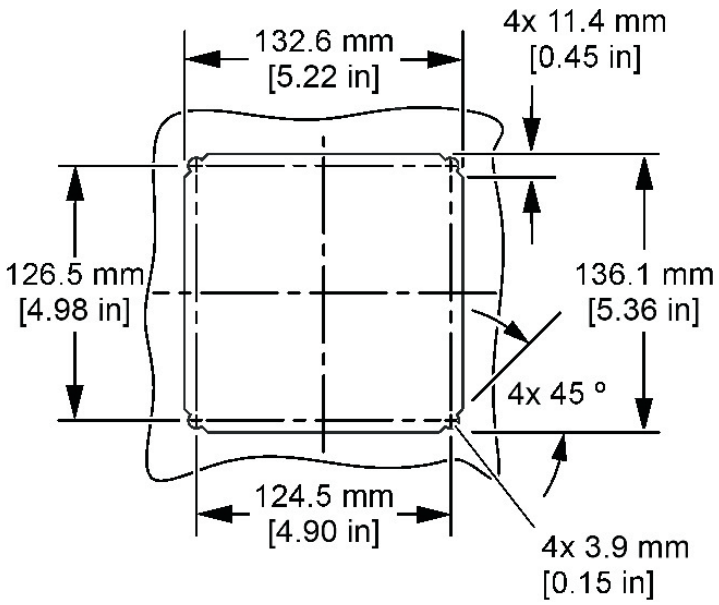

Top and bottom views

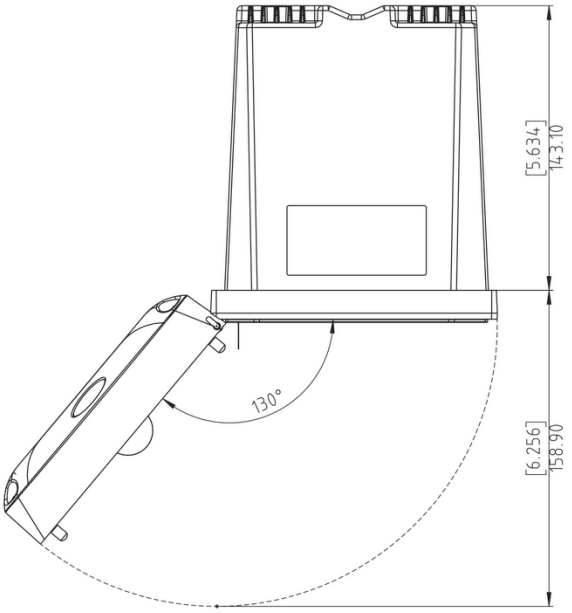

Door Opening Details

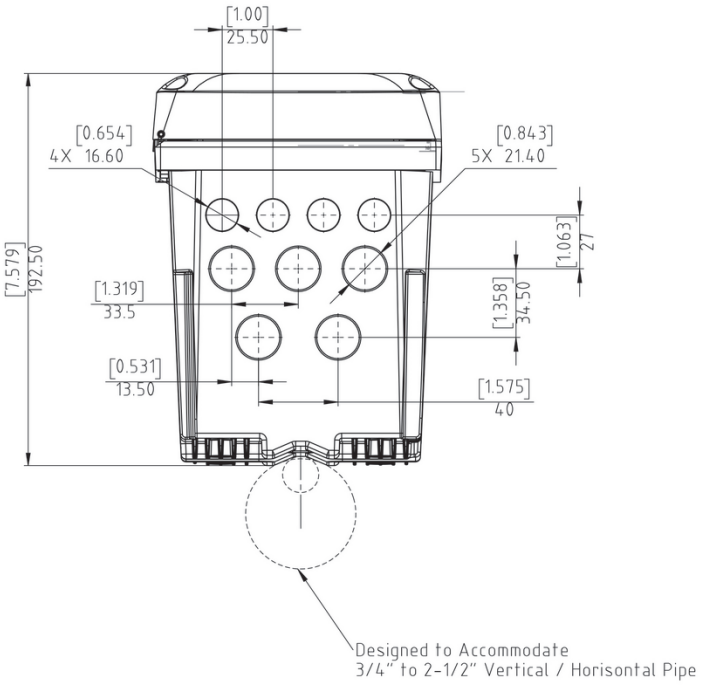

Order Information

Controllers

LXV525.99A1155X	SC4500 Controller, Prognosys, 5x mA Output, 2 Digital Sensors, 100 - 240 VAC, without plug
LXV525.99AA155X	SC4500 Controller, Claros-enabled, 5x mA Output, 2 Digital Sensors, 100 - 240 VAC, without plug
LXV525.99A1150X	SC4500 Controller, Prognosys, 5x mA Output, 1 Digital Sensor, 100 - 240 VAC, without plug
LXV525.99E1155X	SC4500 Controller, Prognosys, 5x mA Output, 2 Digital Sensors, US plug
LXV525.99Z1155X	SC4500 Controller, Prognosys, 5x mA Output, 2 Digital Sensors, 24 VDC, without plug
LXV525.99AA150X	SC4500 Controller, Claros-enabled, 5x mA Output, 1 Digital Sensor, 100 - 240 VAC, without plug
LXV525.99C1155X	SC4500 Controller, Prognosys, 5x mA Output, 2 Digital Sensors, 100 - 240 VAC, EU plug
LXV525.99CA155X	SC4500 Controller, Claros-enabled, 5x mA Output, 2 Digital Sensors, 100 - 240 VAC, EU plug
LXV525.99EA155X	SC4500 Controller, Claros enabled, 5x mA Output, 2 Digital Sensors, US plug

Part numbers are region-specific and end with a region code:
1 = Europe, Middle East & Africa (EMEA); 2 = North, Central & South America; 4 = China, Asia & Australia.

Accessories

LXZ524.99.00004	SC4x00 UV Protection Screen
LXZ524.99.00005	SC4x00 UV Protection Screen with Sunroof
LXZ524.99.00033	SC4x00 Sunroof Visor
LXZ524.99.00037	SC4x00 Sunroof with Visor
LXZ524.99.00036	SC4x00 Mounting Hardware Sunroof with Visor
LXZ524.99.00007	SC4x00 Profibus DP Network Module
LXZ524.97.00042	SC4x00 Input Module
LXZ525.99.00017	SC4500 USB Stick
LXZ525.99.00026	SC4500 Ethernet Cable M12 to M12 / C1D2, 10 m
LXZ525.99.CX002	SC4500 Ethernet IP Upgrade Kit
LXZ525.99.CX003	SC4500 LAN Connector Upgrade Kit
LXZ525.99.CX004	SC4500 Prognosys Upgrade Kit
LXZ525.99.CX006	SC4500 Modbus TCP/IP Upgrade Kit - License Only
LXZ525.97.DX008	SC4500 Modbus RS232/RS485 Module
LXZ525.99.DX002	SC4500 mA Output Module (5 Outputs)
LXZ525.99.DX003	SC4500 pH/ORP Module
LXZ525.99.DX004	SC4500 Conductivity Module
LXZ525.99.D0005	SC4500 HART Module
LXZ525.99.DX006	SC4500 Ultrapure pH/ORP Module
LXZ525.99.DX007	SC4500 Ultrapure Conductivity Module
LXZ525.99.DX010	SC4500 Low Voltage Relays Module

Part numbers are region-specific; "X" in the suffix indicates the region:
0 = Europe, Africa, Middle East; 2 = North America, Central America & South America; 4 = China, Asia & Australia.

Enable the Benefits of Smart Monitoring

This instrument connects to Claros, Hach's innovative Water Intelligence System. Claros allows you to seamlessly connect and manage instruments, data, and process – anywhere, anytime. The result is greater confidence in your data and improved efficiencies in your operations. To unlock the full potential of Claros, insist on Claros Enabled instruments.

Hach Service Protects Your Investment

With Hach Service, you have a global partner who understands your needs and cares about delivering timely, high-quality service you can trust. Our Service Team brings unique expertise to help you maximize instrument uptime, ensure data integrity, maintain operational stability, and reduce compliance risk.

World Headquarters: Loveland, Colorado USA | hach.com

United States
Outside United States

©Hach Company, 2026. All rights reserved.
In the interest of improving and updating its equipment, Hach Company reserves the right to alter specifications to equipment at any time.

DOC053.53.35316.Aug26

Consultas y ventas: AQUAREP · www.aquarep.com.ar · info@aquarep.com.ar · WhatsApp +54 9 11 6091-0087