3700 Series
Inductive Conductivity Sensors

Applications

- Drinking Water
- Wastewater
- Clean Water
- Industrial
- Metal and Mining
- Chemical
- Food and Beverage
- Pulp & Paper
- Surface Water
- Steam Systems



Wide Measuring Range

Hach's Inductive Conductivity Sensors measure from 200 up to 2,000,000 microSiemens/cm. A built-in PT1000 resistance temperature detector (RTD) compensates the measured conductivity for changes in process temperature.

Low Maintenance Design

The inductive sensor design eliminates polarization and electrode coating problems that commonly affect conventional contacting electrode-type conductivity sensors.

Versatile Mounting Styles

Sensors can be installed using a choice of four mounting styles - immersion, insertion, union, and sanitary.

Withstands Harsh Environments

The inductive sensor is available in sanitary (CIP) flange style and convertible styles in PFA, polypropylene, PEEK, and PVDF material. Selected sensors can withstand high pressures and temperatures.

Full-Featured "Plug and Play" with Digital SC Controllers

There are no complicated wiring or set up procedures with any Hach SC controller. Just plug in any combination of Hach digital sensors and it's ready to use - it's "plug and play."

One or multiple sensors - the SC controller family allows you to receive data from up to eight Hach digital sensors in any combination using a single controller.

Communications - multiple alarm/control schemes are available using the relays and PID control outputs. Available communications include analog 4-20 mA, digital Modbus (RS485 and RS232) or Profibus DP protocols. (Other digital protocols are available. Contact your Hach representative for details.)

HACH®
Be Right™

Consultas y ventas: AQUAREP · www.aquarep.com.ar · info@aquarep.com.ar · WhatsApp +54 9 11 6091-0087

Technical Data*

Range	200 - 2,000,000 microSiemens/cm
Operating Temperature Range	-10 - 200 °C (14 - 392 °F); limited by sensor body material and mounting hardware.
Flow Rate	3 m (10 ft.) per second, maximum
Temperature Sensor	PT1000 RTD
Sensor Cable	Polypropylene and PVDF Sensors: 5 conductor (plus two isolated shields) cable with XLPE (cross-linked polyethylene) jacket; rated to 150 °C (302 ºF); 6 m (20 ft.) long PEEK and PFA Sensors: 5 conductor (plus two isolated shields) cable with PFA-coated jacket; rated to 200 °C (392 °F); 6 m (20 ft.) long
Wetted Materials	Polypropylene, PVDF, PEEK or PFA
Pressure/ Temperature Limits	Polypropylene: 6.9 bar at 100 °C (100 psi at 212 °F) PVDF: 6.9 bar at 120 °C (100 psi at 248 °F) PEEK and PFA: 13.8 bar at 200 °C (200 psi at 392 °C) Maximum pressure is dependent on mounting hardware.

**Subject to change without notice.*

In no event will the manufacturer be liable for direct, indirect, special, incidental or consequential damages resulting from any defect or omission in this manual. The manufacturer reserves the right to make changes in this manual and the products it describes at any time, without notice or obligation. Revised editions are found on the manufacturer's website.

Principle of Operation

Inductive conductivity sensors induce a low current in a closed loop of solution, then measure the magnitude of this current to determine the solution's conductivity. The conductivity analyzer drives Toroid A, inducing an alternating current in the solution. This current signal flows in a closed loop through the sensor bore and surrounding solution. Toroid B senses the magnitude of the induced current which is proportional to the conductance of the solution. The analyzer processes this signal and displays the corresponding reading.

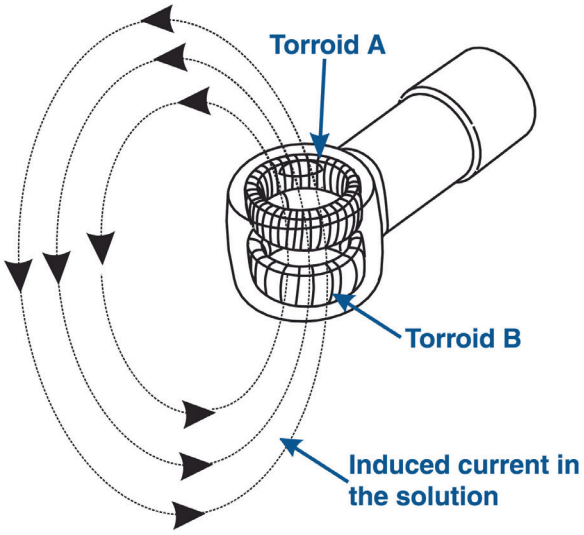

Dimensions

In inches (in.).

Sanitary Style

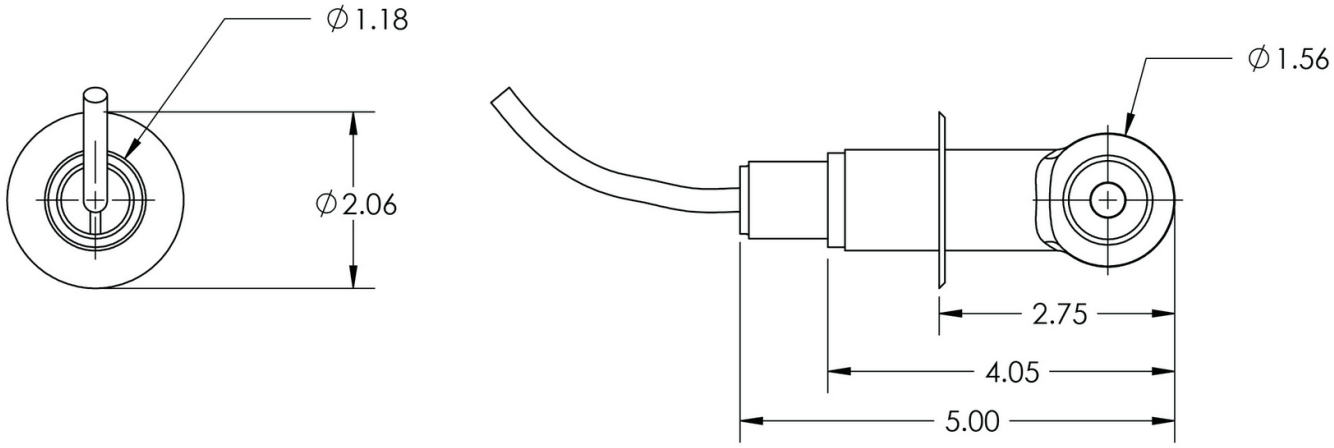

Convertible Style

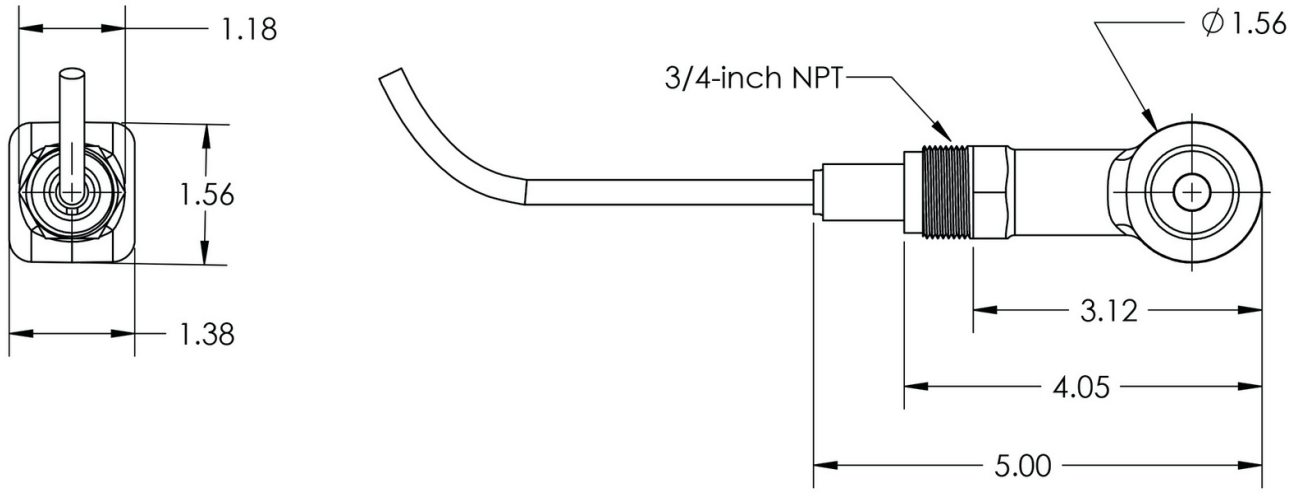

Common Applications

Industry	Application	Recommended Sensor Style (and Material)
Metals Finishing and Mining	Plating bath monitoring	Convertible (Polypropylene)
	Alkaline/caustic wash	Convertible (Polypropylene)
	Rinse water	Convertible (Polypropylene)
	Pickling processes	Convertible (PVDF)
	Metals recovery	Convertible (PEEK)
	Copper floatation	Convertible (PEEK)
	Scrubbers	Convertible (Polypropylene)
Chemicals and Refining	Acid production	Convertible (PFA)
	Caustic production	Convertible (PFA)
	Phosphates	Convertible (PFA)
	Fertilizers	Convertible (PFA)
	Detergents	Convertible (PFA)
	Glycerin	Convertible (PVDF)
	Moisture detection	Convertible (PVDF or PFA)
	Scrubbers	Convertible (PVDF)
	Wastewater	Convertible (PVDF)
	Oil well drilling mud	Convertible (PEEK)
	Leak detection	Convertible (PEEK)
	Alkylation	Convertible (PFA)
	Spill detection	Convertible (PEEK)
Food and Beverage	Brine concentration	Convertible (Polypropylene)
	Desalting	Convertible (Polypropylene)
	Cheese production	Sanitary (PFA)
	Caustic peeling	Convertible (PFA)
	Pickle making	Sanitary (Polypropylene)
	CIP applications	Sanitary (PFA)
	Rinse water control	Convertible (Polypropylene)
	Sugar carbonation	Convertible (PFA)
Pulp and Paper	White, black and green liquor	Convertible (PEEK)
	Stock washing	Convertible (PEEK)
	Wash and cooking liquor control	Convertible (PEEK)
	Scrubbers	Convertible (PEEK)
	Spill detection	Convertible (PEEK)
Textile Manufacturing	Rinse water	Convertible (Polypropylene)
	Dye baths	Convertible (Polypropylene)
	Bleaching	Convertible (Polypropylene)
	Mercerizing	Convertible (Polypropylene)
	Acid washing	Convertible (Polypropylene)
	Carbonizing and scouring baths	Convertible (Polypropylene)
Natural Waters, Lakes, Streams, and Sea Water	Water pollution monitoring	Convertible (Polypropylene)
	Salt intrusion	Convertible (Polypropylene)
	Salinity	Convertible (Polypropylene)
Clean Water Treatment	Ion exchange regeneration	Convertible (Polypropylene)
	Reverse osmosis concentrate monitoring	Convertible (Polypropylene)
	Softener regeneration	Convertible (Polypropylene)
	Acid/caustic concentration control	Convertible (PVDF)
Wastewater Treatment	Acid/caustic concentration control	Convertible (PEEK)
	Spill detection	Convertible (PEEK)
Steam Generation	Boiler blowdown	Convertible (Polypropylene)
	Flue gas scrubbers	Convertible (Polypropylene)

Order Information

3700sc Digital Inductive Conductivity Sensors & Accessories

All digital inductive sensors come complete with standard sensor cable (6 m/20 ft.), digital gateway, and digital extension cable (1 m/3.3 ft.).

D3705E2T	Digital Inductive Conductivity Sensor, Sanitary Body Style, Polypropylene Body Material
D3706E2T	Digital Inductive Conductivity Sensor, Sanitary Body Style, PVDF Body Material
D3708E2T	Digital Inductive Conductivity Sensor, Sanitary Body Style, PFA Body Material
D3725E2T	Digital Inductive Conductivity Sensor, Convertible Body Style, Polypropylene Body Material
D3726E2T	Digital Inductive Conductivity Sensor, Convertible Body Style, PVDF Body Material
D3727E2T	Digital Inductive Conductivity Sensor, Convertible Body Style, PEEK Body Material
D3728E2T	Digital Inductive Conductivity Sensor, Convertible Body Style, PFA Body Material
6120800	Use the Digital Gateway to connect analog Hach 3700 inductive conductivity sensors to a Hach digital controller.
6122400	Digital Extension Cable, 1 m (3.3 ft.)
5796000	Digital Extension Cable, 7.7 m (25 ft.)
5796100	Digital Extension Cable, 15 m (50 ft.)
5796200	Digital Extension Cable, 31 m (100 ft.)

3700 Analog Inductive Conductivity Sensors & Accessories

All analog sensors come complete with standard sensor cable (6 m/20 ft.).

3705E2T	Analog Inductive Conductivity Sensor, Sanitary Body Style, Polypropylene Body Material
3706E2T	Analog Inductive Conductivity Sensor, Sanitary Body Style, PVDF Body Material
3708E2T	Analog Inductive Conductivity Sensor, Sanitary Body Style, PFA Body Material
3725E2T	Analog Inductive Conductivity Sensor, Convertible Body Style, Polypropylene Body Material
3726E2T	Analog Inductive Conductivity Sensor, Convertible Body Style, PVDF Body Material
3727E2T	Analog Inductive Conductivity Sensor, Convertible Body Style, PEEK Body Material
3728E2T	Analog Inductive Conductivity Sensor, Convertible Body Style, PFA Body Material
1W1100	Analog Interconnect Cable, order per foot
60A2053	Junction Box, Surface-mount, aluminum (includes mounting hardware)
60A9944	Junction Box, Pipe-mount, PVC (for 1/2-inch diameter pipe, includes mounting hardware)
60G2052	Junction Box, Pipe-mount, PVC (for 1-inch diameter pipe, includes mounting hardware)
76A4010-001	Junction Box, NEMA 4X (no mounting hardware included)

Choice of body styles:

Sanitary (CIP) - 2-inch flange, special cap, and EPDM compound gasket. Conforms to provisions of 3-A Sanitary Standards.

Convertible - 2-inch NPT, designed for tee, other flow through, insertion, and pipe mountings for immersion.

Order Information

Conductivity Reference Solutions

25M3A2000-X 100 / 200 / 400 / 500 / 600 / 1000 µS/cm, 1 L each

25M3A2050-X 1000 / 1500 / 2000 µS/cm, 1 L each

25M3A2100-X 2000 / 2500 / 3000 / 5000 / 10,000 / 50,000 / 100K / 150K µS/cm, 1 L each

25M3A2200-X 200K / 300K µS/cm, 1 L each

25M3A2300-X 300K / 350K / 450K / 500K µS/cm, 1 L each

The conductivity reference solutions are available in different concentrations, see listed values per main number.
To get the fully appropriate order number please replace the "X" with the according µS/cm concentration value from the list.

Mounting Hardware

MH018S8SZ Sanitary Mount, 316 SS
Includes 316 SS sanitary 2-inch tee, heavy-duty clamp, special cap, and EPDM compound gasket.

MH518N3NZ Union Mount, 316 SS

Union Mount, CPVC

MH568N3NZ Union Mount, PVDF
Includes adapter and a 2-inch pipe tee. Union adapters are used with convertible style sensors that are to be union or flange mounted into a standard 2-inch NPT pipe tee or insertion mounted into a 2-inch ball valve assembly.

MH432G Immersion Mount, CPVC Pipe
Includes ½-inch diameter x 4-foot pipe, ½- x ¾-inch NPT coupling, and plastic pipe-mount junction box with terminal strip.

MH138M9NZ Insertion Mount, CPVC

MH118M9NZ Insertion Mount, 316 SS
Includes 2-inch NPT insertion assembly with ball valve.

Hach Service Protects Your Investment

With Hach Service, you have a global partner who understands your needs and cares about delivering timely, high-quality service you can trust. Our Service Team brings unique expertise to help you maximize instrument uptime, ensure data integrity, maintain operational stability, and reduce compliance risk.

DOC053.53.35303Dec24

Hach World Headquarters: Loveland, Colorado USA
United States: 800-227-4224 tel 970-669-2932 fax
Outside United States: 970-669-3050 tel 970-461-3939 fax
hach.com

Printed in U.S.A.
©Hach Company, 2024. All rights reserved.
In the interest of improving and updating its equipment, Hach Company reserves the right to alter specifications to equipment at any time.

HACH®
Be Right™

Consultas y ventas: AQUAREP · www.aquarep.com.ar · info@aquarep.com.ar · WhatsApp +54 9 11 6091-0087