CL17sc Colorimetric Chlorine Analyzer

Applications

- Drinking Water
- Wastewater
- Food and Beverage
- Pharmaceutical
- Power Generation
- Semiconductor
- Field Use



The Next Standard in Chlorine Analysis

Built on a legacy of reliability in online chlorine analysis, the advanced design of the CL17sc reduces routine maintenance touch time and provides powerful diagnostic features and enhanced connectivity. The result is less hassle, minimized risk of data loss, and even more reliable information to empower your decision making.

Maintenance made easy

The CL17sc reduces your routine maintenance touch time with programmable alerts, simplified tubing replacement, and step-by-step maintenance instructions.

Peace of mind through comprehensive diagnostics

With upgraded features like a flow meter, colorimeter window, multi-color status light, and predictive diagnostic software, you know your instrument is operating as intended.

Expanded connectivity. Increased flexibility.

By pairing the CL17sc with Hach's SC controller platform, your options increase significantly: internal data logging; external analog and digital communication alternatives; and multi-parameter instrument flexibility.

The CL17sc is compliant with US EPA regulation 40 CFR 141.74. Both Method 4500-CL G and Method 334.0 can be used for measuring residual chlorine in drinking water.

HACH®
Be Right™

Consultas y ventas: AQUAREP · www.aquarep.com.ar · info@aquarep.com.ar · WhatsApp +54 9 11 6091-0087

Technical Data*

Range	0 - 10 mg/L free or total residual chlorine
Accuracy	± 5% or ± 0.04 mg/L (whichever is greater) from 0 - 5 mg/L Cl_2 ± 10% from 5 - 10 mg/L Cl_2
Lower Limit of Detection (LOD)	0.03 mg/L
Cycle Time	2.5 minutes
Inlet Pressure	0.3 - 5.2 bar (4.5 - 75 psig) supplied to Y-strainer 0.1 - 0.3 bar (1.5 - 5 psig) supplied to analyzer
Inlet	¼-inch OD polyethylene tube, quick-disconnect fitting
Drain	½-inch ID flexible hose
Air Purge	Optional with 3/8-inch quick-connect fitting and tubing; 0.003 m^3/min at 1.38 bar (20 psig) maximum
Sample Requirements	Y-strainer filtration with 40-mesh screen or higher
Sample Flow Rate	60 - 200 mL/min through the instrument
Sample Temperature	5 - 40 °C (41 - 104 °F)
Operating Temperature Range	5 - 40 °C (41 - 104 °F)
Operating Humidity	0 - 90% relative humidity, non-condensing
Interferences	Other oxidizing agents such as bromide, chlorine dioxide, permanganate, and ozone will cause a positive interference. Hardness must not exceed 1,000 mg/L $CaCO_3$.
Reagent Consumption	0.5 L of buffer solution and 0.5 L of indicator solution in 31 days
Certifications	CE compliant with: EN 61326-1, CISPR 11, EN 50581 ACMA RCM South Korea KC Certificate North America: FCC Supplier's Declaration of Conformance, IEC/EN 60529, ICES-003
Light Source	LED, measurement at 510 nm, 1 cm light pathlength
Enclosure Rating	IP66
Mounting	Wall mount
Power Requirements (Voltage)	12 VDC, 400 mA maximum (supplied by the controller)
Dimensions (H x W x D)	342 mm x 329 mm x 177 mm
Weight	4.1 kg (9.0 lbs.)

**Subject to change without notice.*

Principle of Operation

The CL17sc Colorimetric Chlorine Analyzer has three operating components:

- A linear peristaltic pump to precisely control the volume of incoming samples and reagents
- A colorimeter
- Indicator and buffer solutions

A zero reference point is established at the beginning of the cycle by measuring blank absorbance. (This compensates for the sample's color intensity and turbidity before the chlorine measurement is made.) Indicator and buffer solutions are then added to the sample while a magnetic stirrer mixes the solution and the sample changes color. A colorimeter then measures the light transmitted through the sample. The measured color intensity is compared to a reference standard. Finally, the sample cell is flushed with new sample so that the cycle can repeat every 2.5 minutes.

Dimensions

The CL17sc is designed to be wall-mounted with four ¼-inch screws. Adequate clearance must be left for plumbing and controller connection. The sample inlet connection is a ¼-inch quick-connect fitting and the drain connection is ½-inch ID flexible hose. The analyzer receives power from connection to a Hach SC controller. (The analyzer's cable is approximately 6.5 ft. in length.)

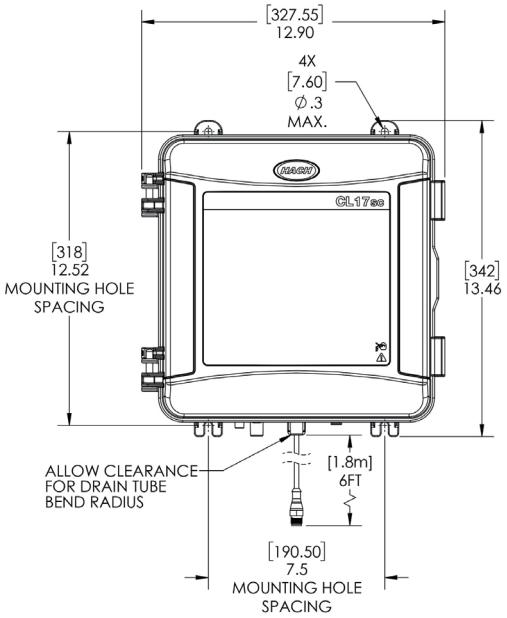

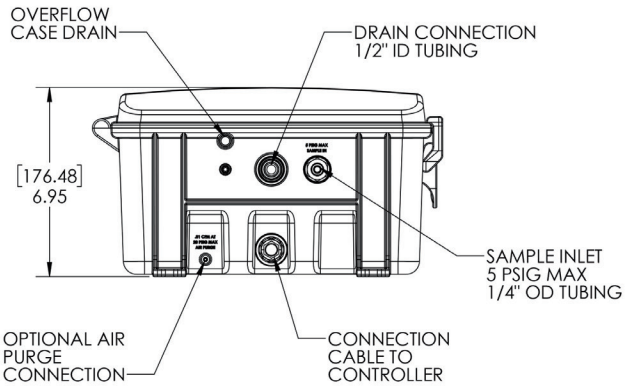

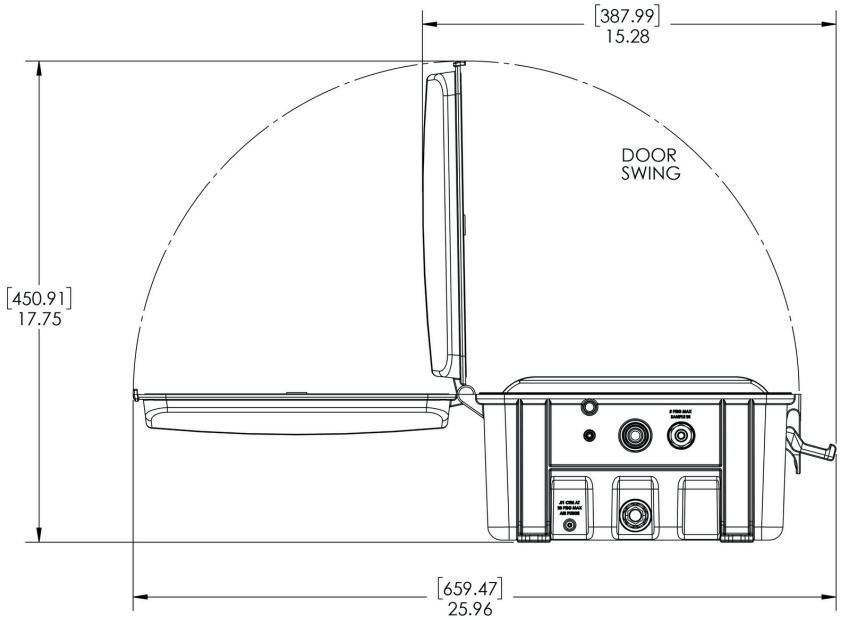

Order Information

Hach CL17sc Colorimetric Chlorine Analyzers are shipped with an installation kit, user manual, and one month of reagents where noted. The user selects a standpipe installation kit or a pressure regulator installation kit at the time of purchase. Hach SC controllers are required for operation and are sold separately.

CL17sc Colorimetric Chlorine Analyzers

8572700 CL17sc Colorimetric Chlorine Analyzer with Standpipe Installation Kit and Reagents for Free Chlorine

8572800 CL17sc Colorimetric Chlorine Analyzer with Standpipe Installation Kit and Reagents for Total Chlorine

8572900 CL17sc Colorimetric Chlorine Analyzer with Pressure Regulator Installation Kit and Reagents for Free Chlorine

8573000 CL17sc Colorimetric Chlorine Analyzer with Pressure Regulator Installation Kit and Reagents for Total Chlorine

8572300 CL17sc Colorimetric Chlorine Analyzer with Standpipe Installation Kit, w/o Reagents

8572400 CL17sc Colorimetric Chlorine Analyzer with Pressure Regulator Installation Kit, w/o Reagents

8572350 CL17sc Colorimetric Chlorine Analyzer with Standpipe Installation Kit (> 10 psi sample pressure to Y-strainer), w/o reagents

Accessories

8568200 CL17sc Calibration Verification Kit

8573200 CL17sc Calibration Verification Refill Kit

8560500 CL17sc Standpipe Installation Kit (< 10 psi sample pressure to Y-strainer)

8565700 CL17sc Pressure Regulator Installation Kit

8576001 CL17sc Standpipe Installation Kit (> 10 psi sample pressure to Y-strainer)

Reagents and Consumables

8560400 CL17sc Tubing Kit (pre-assembled)

8573100 CL17sc Cell Cleaning Kit

2556900 Set includes: CL17 DPD Indicator, CL17 Free Chlorine Indicator Solution, and CL17 Free Chlorine Buffer Solution.

2557000 Set includes: CL17 DPD Indicator, CL17 Total Chlorine Indicator Solution, and CL17 Total Chlorine Buffer Solution.

Enable the Benefits of Smart Monitoring

This instrument connects to Claros, Hach's innovative Water Intelligence System. Claros allows you to seamlessly connect and manage instruments, data, and process – anywhere, anytime. The result is greater confidence in your data and improved efficiencies in your operations. To unlock the full potential of Claros, insist on Claros Enabled instruments.

Hach Service Protects Your Investment

With Hach Service, you have a global partner who understands your needs and cares about delivering timely, high-quality service you can trust. Our Service Team brings unique expertise to help you maximize instrument uptime, ensure data integrity, maintain operational stability, and reduce compliance risk.

DOC053.53.35300.Dec24

Hach World Headquarters: Loveland, Colorado USA
United States: 800-227-4224 tel 970-669-2932 fax
Outside United States: 970-669-3050 tel 970-461-3939 fax
hach.com

Printed in U.S.A.
©Hach Company, 2024. All rights reserved.
In the interest of improving and updating its equipment, Hach Company reserves the right to alter specifications to equipment at any time.

HACH®
Be Right™

Consultas y ventas: AQUAREP · www.aquarep.com.ar · info@aquarep.com.ar · WhatsApp +54 9 11 6091-0087