TU5 Series Turbidimeters

Applications

- Drinking Water
- Power
- Beverage
- Pharmaceutical



The next standard in the evolution of turbidity

Only the new TU5 Series Lab & Process Turbidimeters with 360° x 90° Detection™ deliver unprecedented confidence that a change in your reading is a change in your water.

Groundbreaking 360° x 90° Detection™ Technology

The TU5 Series employs a patented optical design that sees more of your sample than any other turbidimeter, delivering the best low level precision and sensitivity while minimizing variability from test to test.

Matching lab and online results

For the first time you will be able to remove the uncertainty of which measurement to trust, thanks to identical 360° x 90° Detection™ Technology in both instruments.

Everything about turbidity – faster

The TU5 Series dramatically reduces the time needed to get a turbidity measurement you can rely on, with 98% less online sample surface area to clean, sealed vials for calibration, and the elimination of the need for indexing and silicone oil in the lab. Not to mention, a smaller online sample volume means you will detect events almost immediately.

No surprises

Prognosys™ monitors your TU5 Series online instrument, proactively alerting you to maintenance needs before your measurement becomes questionable. And a Hach Service Agreement protects your investment and helps ensure that you stay in compliance and on budget.

USEPA and ISO 7027 reporting: The TU5 Series Turbidimeters apply the instrument design and meet performance criteria established by EPA Approved Hach Method 10258 and ISO 7027-1:2016, making them suitable for regulatory reporting.

HACH®
Be Right™

Consultas y ventas: AQUAREP · www.aquarep.com.ar · info@aquarep.com.ar · WhatsApp +54 9 11 6091-0087

Technical Data*

TU5200

Light Source	Class 2 laser product, with embedded 650 nm (EPA 0.43 mW) or Class 1 laser product, with embedded 850 nm (ISO), max. 0.55 mW (complies with IEC/EN 60825-1 and to 21 CFR 1040.10 in accordance with Laser Notice No. 50)
Range	EPA: 0 - 700 NTU / FNU / TE/F / FTU 0 - 100 mg/L 0 - 175 EBC ISO: 0 - 1000 NTU / FNU / TE/F / FTU 0 - 100 mg/L 0 - 250 EBC
Accuracy	±2 % plus 0.01 NTU from 0 - 40 NTU; ±10 % of reading from 40 - 1000 NTU based on Formazin primary standard (at 25 °C)
Resolution	0.0001 NTU / FNU / TE/F / FTU / EBC / mg/L
Repeatability	<40 NTU: Better than 1% of reading or ±0.002 NTU on Formazin at 25 °C, whichever is greater >40 NTU: Better than 3.5% of reading on Formazin at 25 °C
Stray Light	<10 mNTU
Units	NTU, FNU, TE/F, FTU, EBC; mg/L if calibrated with Degrees calibration curve
Operating Temperature Range	10 - 40 °C (50 - 104 °F)
Operating Humidity	80% at 30 °C (non condensing)
Sample Temperature	4 - 70 °C (39 - 158 °F)
Storage Conditions	-30 - 60 °C (-22 - 140 °F)
Power Requirements (Voltage)	100 - 240 VAC
Power Requirements (Hz)	50/60 Hz
Certifications	CE compliant US FDA accession number: 1420493-000 EPA version, 1420492-000 ISO version Complies with IEC/EN 60825-1 and to 21 CFR 1040.10 in accordance with Laser Notice No. 50) Australian ACMA Marking
Dimensions (H x W x D)	195 mm x 409 mm x 278 mm
Weight	2.4 kg (5.29 lbs.)
Warranty	1 year

TU5300sc / TU5400sc

Light Source	Class 2 laser product, with embedded 650 nm (EPA 0.43 mW) or Class 1 laser product, with embedded 850 nm (ISO), max. 0.55 mW (complies with IEC/EN 60825-1 and to 21 CFR 1040.10 in accordance with Laser Notice No. 50)
Range	EPA: 0 - 700 NTU / FNU / TE/F / FTU 0 - 100 mg/L 0 - 175 EBC ISO: 0 - 1000 NTU / FNU / TE/F / FTU 0 - 100 mg/L 0 - 250 EBC
Accuracy	±2% or 0.01 NTU from 0 - 40 NTU ±10% of reading from 40 - 1000 NTU based on Formazin primary standard
Resolution	0.0001 NTU / FNU / TE/F / FTU / EBC
Repeatability	Better than 1% of reading or ±0.002 NTU (TU5300sc) or ±0.0006 NTU (TU5400sc) on Formazin at 25 °C (77 °F), whichever is greater
Stray Light	<10 mNTU
Units	NTU, FNU, TE/F, FTU, EBC
Signal Average Time	TU5300sc: 30 - 90 seconds TU5400sc: 1 - 90 seconds
Response Time	TU5300sc: T90 <45 seconds at 100 mL/min TU5400sc: T90 <30 seconds at 100 mL/min
Sample Temperature	2 - 60 °C (35 - 140 °F)
Sample Pressure	6 bar (87 psi) maximum, compared to air at sample temperature range from 2 - 40 °C (35.6 - 104 °F)
Sample Flow Rate	100 - 1000 mL/min; optimal flow rate: 200 - 500 mL/min
Operating Temperature Range	0 - 50 °C (32 - 122 °F)
Operating Humidity	Relative humidity: 5 - 95% at different temperatures, non-condensing
Storage Conditions	-40 - 60 °C (-40 - 140 °F)
Enclosure Rating	Electronic compartment IP55; all other functional units IP65 with process head/ACM attached to the TU5300sc/TU5400sc instrument
Certifications	CE compliant US FDA accession number: 1420493-000 EPA version, 1420492-000 ISO version Australian ACMA Marking
Dimensions (H x W x D)	249 mm x 268 mm x 190 mm
Weight	5.95 lbs. (2.7 kg); 11 lbs. (5.0 kg) with all accessories
Warranty	1 year

**Subject to change without notice.*

Principle of Operation

The TU5 Series turbidimeters measure turbidity by directing a laser into a sample to scatter off suspended particles. The light that is scattered at a 90° angle from the incident beam is reflected through a conical mirror in a 360° ring around the sample before it is captured by a detector.

The amount of light scattered is proportional to the turbidity of the sample. If the turbidity of the sample is negligible, little light will be scattered and detected by the photocell and the turbidity reading will be low. High turbidity, on the other hand, will cause a high level of light scattering and result in a high reading.

The 360° x 90° optics of the TU5 series were optimized for high accuracy at low turbidity ranges and therefore the TU5 does not include ratio technology. Ratio technology is only applicable for high turbidity applications which have interference from color and large particles.

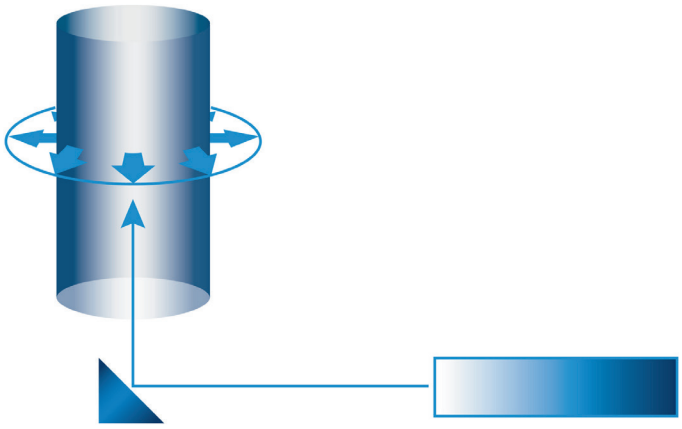

Dimensions

TU5300sc and TU5400sc front view

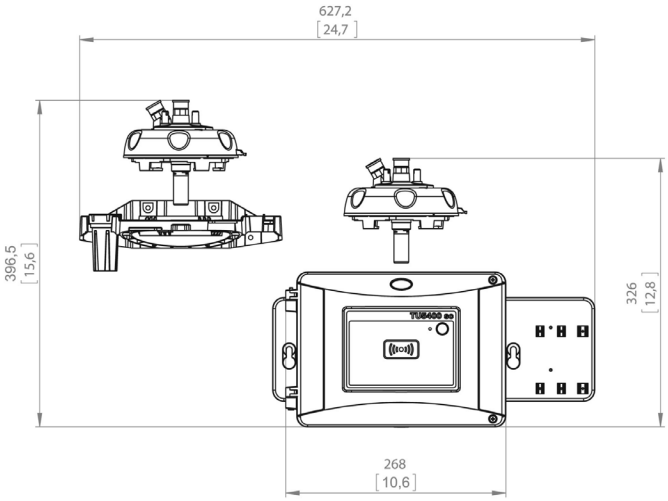

TU5300sc and TU5400sc rear view

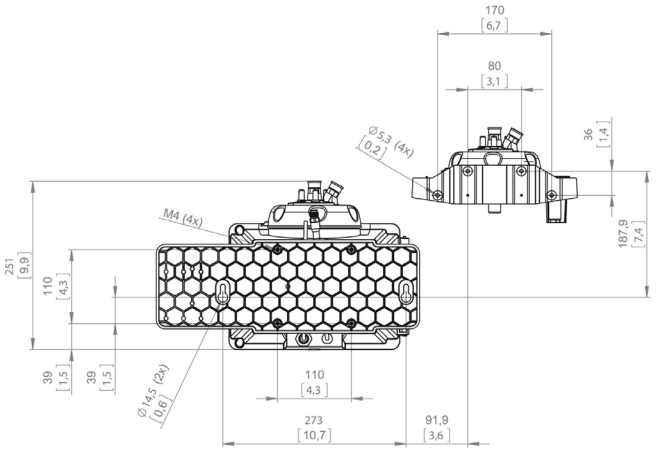

TU5300sc and TU5400sc top view

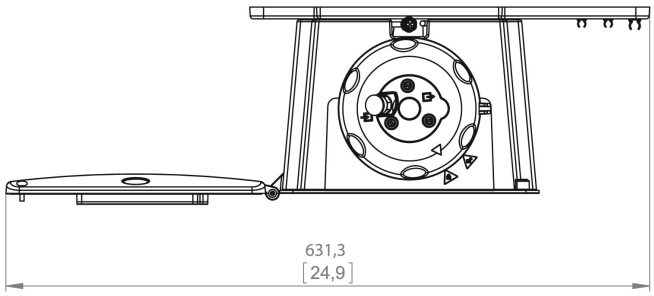

TU5300sc and TU5400sc with automatic cleaning module

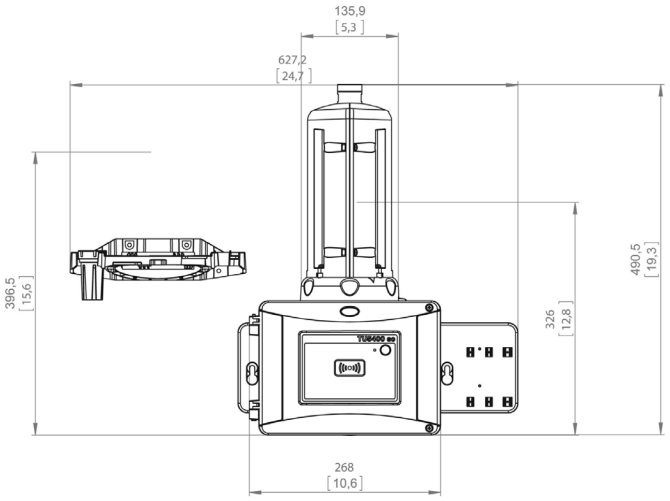

Order Information





TU5200 Benchtop Laser Turbidimeters

LPV442.99.03012	TU5200 Benchtop Laser Turbidimeter with RFID, EPA Version
LPV442.99.01012	TU5200 Benchtop Laser Turbidimeter without RFID, EPA Version
LPV442.99.03022	TU5200 Benchtop Laser Turbidimeter with RFID, ISO Version
LPV442.99.01022	TU5200 Benchtop Laser Turbidimeter without RFID, ISO Version

TU5300sc/TU5400sc Online Laser Turbidimeters

LXV445.99.10112	TU5300sc Low Range Laser Turbidimeter, EPA Version
LXV445.99.10212	TU5400sc Ultra-High Precision Low Range Laser Turbidimeter, EPA Version
LXV445.99.53112	TU5300sc with Flow Sensor, Automatic Cleaning, RFID, and System Check, EPA Version
LXV445.99.53212	TU5400sc with Flow Sensor, Automatic Cleaning, RFID, and System Check, EPA Version

Please note: Other turbidimeter configurations are available and RFID may not be available in all areas. Please visit hach.com or contact your local Hach representative.

Please note: An SC controller is required for operation of the TU5300sc or TU5400sc.

Calibration and Verification

LZY835	StablCal Primary Turbidity Standards Kit, 10/20/600 NTU, with RFID
LZY898	StablCal Primary Turbidity Standards Kit without RFID (10 NTU, 20 NTU, 600 NTU)
LZY901	Glass Rod Secondary Turbidity Standard <0.1 NTU
LZY834	Replacement Vial for TU5300sc and TU5400sc
LZV946	Sample Vials for TU5200

TU5 Series Accessories

LQV159.97.00002	Automatic Cleaning Module for TU5300sc and TU5400sc
LQV160.99.00002	Flow Sensor for TU5300sc and TU5400sc
LZY876	Desiccant Cartridge for TU5300sc and TU5400sc
LZY907.97.00002	Maintenance kit for TU5300sc and TU5400sc (incl. 20 NTU + 600 NTU vials and <0.1 NTU glass rod)
LQV157.99.50002	SIP10 Sipper Unit for TU5200
LZY903	Manual Vial Wiper for TU5200, TU5300sc, and TU5400sc

Hach Service Protects Your Investment

With Hach Service, you have a global partner who understands your needs and cares about delivering timely, high-quality service you can trust. Our Service Team brings unique expertise to help you maximize instrument uptime, ensure data integrity, maintain operational stability, and reduce compliance risk.

DOC050.53.10053.Dec24

HACH COMPANY World Headquarters: Loveland, Colorado USA
United States: 800-227-4224 tel 970-669-2932 fax
Outside United States: 970-669-3050 tel 970-461-3939 fax
hach.com

Printed in U.S.A.
©Hach Company, 2024. All rights reserved.
In the interest of improving and updating its equipment, Hach Company reserves the right to alter specifications to equipment at any time.

HACH® Be Right™

Consultas y ventas: AQUAREP · www.aquarep.com.ar · info@aquarep.com.ar · WhatsApp +54 9 11 6091-0087