TI01046D/06/EN/11.26-00
71751115
2026-01-01

Technical Information
Proline Promag W 400

Electromagnetic flowmeter



Versatile standard flowmeter for the water and wastewater industry

Application

- The bidirectional measuring principle is virtually independent of pressure, density, temperature and viscosity
- Ideal for water measurement, e.g. drinking water, utility water and industrial/municipal wastewater

Device properties
- International drinking water approvals
- Degree of protection IP68 (Type 6P enclosure)
- Approved for custody transfer to MI-001/OIML R49
- Transmitter housing made of durable polycarbonate or aluminum
- WLAN access
- Integrated data logger: measured values monitoring

Your benefits

- Reliable measurement at constant accuracy with 0 x DN run without pressure loss
- Flexible engineering – sensors with fixed flanges or lap joint flanges
- Application suitability – corrosion protection according to EN ISO 12944 for buried or underwater installations
- Improved plant availability – sensor compliant with industry-specific requirements
- Safe operation – no need to open device
- Time-saving local operation without additional software and hardware – integrated web server
- Built-in verification and build-up detection – Heartbeat Technology

Endress+Hauser
People for Process Automation

Consultas y ventas: AQUAREP · www.aquarep.com.ar · info@aquarep.com.ar · WhatsApp +54 9 11 6091-0087

Table of contents

About this document 4
Symbols 4

Function and system design 5
Measuring principle 5
Measuring system 6
Equipment architecture 7
Safety 7

Input 8
Measured variable 8
Measuring range 8
Operable flow range 12
Input signal 13

Output 13
Output signal 13
Signal on alarm 15
Low flow cut off 17
Galvanic isolation 17
Protocol-specific data 17

Power supply 19
Terminal assignment 19
Pin assignment, device plug 22
Supply voltage 23
Power consumption 23
Current consumption 23
Device fuse 23
Power supply failure 23
Overcurrent protection element 23
Electrical connection 24
Potential equalization 28
Terminals 31
Cable entries 31
Cable specification 31
Overvoltage protection 34

Performance characteristics 34
Reference operating conditions 34
Maximum measured error 34
Repeatability 36
Influence of ambient temperature 36

Installation 37
Mounting location 37
Orientation 39
Inlet and outlet runs 40
Adapters 42
Length of connecting cable 43
Special installation instructions 43
Mounting the transmitter housing 45

Environment 46
Ambient temperature range 46
Storage temperature 46
Atmosphere 47
Degree of protection 47
Vibration- and shock-resistance 47
Mechanical load 48
Electromagnetic compatibility (EMC) 48

Process 48
Medium temperature range 48
Conductivity 49
Pressure/temperature ratings 49
Pressure tightness 52
Flow limit 53
Pressure loss 53
System pressure 54
Vibrations 54

Custody transfer 55

Mechanical construction 55
Dimensions in SI units 55
Dimensions in US units 75
Weight 87
Measuring tube specification 91
Materials 92
Fitted electrodes 95
Process connections 95
Surface roughness 95

Display and user interface 95
Operation concept 95
Languages 95
Onsite operation 96
Remote operation 96
Service interface 98
Supported operating tools 99
HistoROM data management 100

Certificates and approvals 101
CE mark 102
UKCA marking 102
RCM marking 102
Ex-approval 102
Drinking water approval 102
HART certification 102
Conformity PROFIBUS 102
Modbus RS485 certification 102
EtherNet/IP certification 102
Radio approval 102
Measuring instrument approval 102
External standards and guidelines 103

Ordering information 103

Application packages 103
Cleaning 104
Diagnostics functions 104
Heartbeat Technology 104

Accessories 104
Device-specific accessories 104
Communication-specific accessories 105
Service-specific accessories 106
System components 107

Supplementary documentation 107
Standard documentation 107
Supplementary device-dependent documentation 107

Registered trademarks 108

About this document

Symbols

Electrical symbols

Symbol	Meaning
	Direct current
	Alternating current
	Direct current and alternating current
	**Ground connection** A grounded terminal which, as far as the operator is concerned, is grounded via a grounding system.
	**Protective earth (PE)** Ground terminals that must be connected to ground prior to establishing any other connections. The ground terminals are located on the interior and exterior of the device: ▪ Interior ground terminal: protective earth is connected to the mains supply. ▪ Exterior ground terminal: device is connected to the plant grounding system.

Communication-specific symbols

Symbol	Meaning
	**Wireless Local Area Network (WLAN)** Communication via a wireless, local area network
	**Bluetooth** Wireless data transmission between devices over a short distance via radio technology
	**LED** LED is off.
	**LED** LED is on.
	**LED** LED flashing.

Symbols for certain types of information

Symbol	Meaning
	**Permitted** Procedures, processes or actions that are permitted.
	**Preferred** Procedures, processes or actions that are preferred.
	**Forbidden** Procedures, processes or actions that are forbidden.
	**Tip** Indicates additional information.
	Reference to documentation
	Reference to page
	Reference to graphic
	Visual inspection

Symbols in graphics

Symbol	Meaning
1, 2, 3, ...	Item numbers
1., 2., 3., ...	Series of steps
A, B, C, ...	Views
A-A, B-B, C-C, ...	Sections
	Hazardous area
	Safe area (non-hazardous area)
	Flow direction

Function and system design

Measuring principle

According to *Faraday's law of magnetic induction*, a voltage is induced in a conductor moving through a magnetic field.

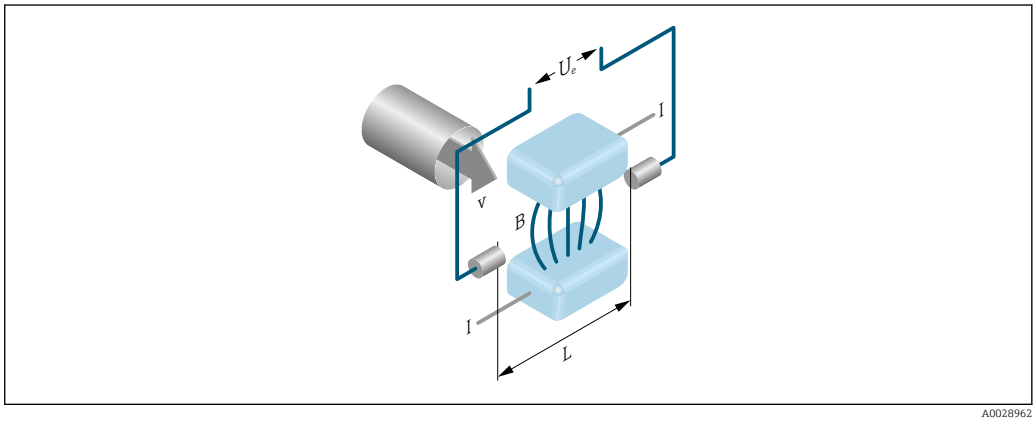

A0028962

Ue Induced voltage
B Magnetic induction (magnetic field)
L Electrode spacing
I Current
v Flow velocity

In the electromagnetic measuring principle, the flowing medium is the moving conductor. The induced voltage (U_e) is proportional to the flow velocity (v) and is transmitted to the amplifier via the working electrodes. The flow volume (Q) is calculated via the pipe cross-section (A). The magnetic field is created through a switched direct current of alternating polarity.

Formulae for calculation

- Induced voltage $U_e = B \cdot L \cdot v$
- Volume flow $Q = A \cdot v$

Measuring system

The device consists of a transmitter and a sensor.

Two device versions are available:
- Compact version - transmitter and sensor form a mechanical unit.
- Remote version - transmitter and sensor are mounted in separate locations.

Transmitter

Proline 400
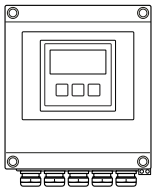
A0045222
	Device versions and materials:
	▪ Compact version: compact housing
	  ▪ Polycarbonate plastic
	  ▪ Aluminum, AlSi10Mg, coated
	▪ Remote version: wall-mount housing
	  ▪ Polycarbonate plastic
	  ▪ Aluminum, AlSi10Mg, coated
	
	Configuration:
	▪ External operation via four-line, illuminated local display with touch control and guided menus ("Make-it-run" wizards) for applications
	▪ Via operating tools (e.g. FieldCare)
	▪ Via Web browser (e.g. Microsoft Internet Explorer)
	▪ Also for device version with EtherNet/IP output:
	  ▪ Via Add-on Profile Level 3 for automation system from Rockwell Automation
	  ▪ Via Electronic Data Sheet (EDS)
	▪ Also for device version with PROFIBUS DP output:
	Via PDM driver for Siemens automation system

Sensor

Promag W *Lap joint flange, lap joint flange, stamped plate or fixed flange with aluminum half-shell housing: DN 25 to 300 mm (1 to 12 in)* 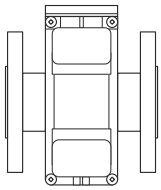 A0017040	▪ Nominal diameter range: DN 25 to 3 000 mm (1 to 120 in) ▪ Materials → 🖹 92
Fixed flange with fully welded housing made of carbon steel: DN 25 to 300 mm (1 to 12 in) 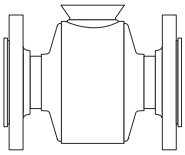 A0022673	

Fixed flange with fully welded housing made of carbon steel: DN 350 to 3 000 mm (14 to 120 in)

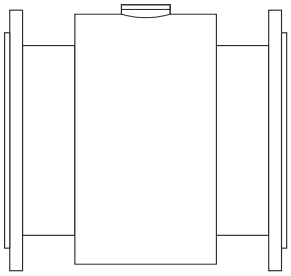

A0017041

Equipment architecture

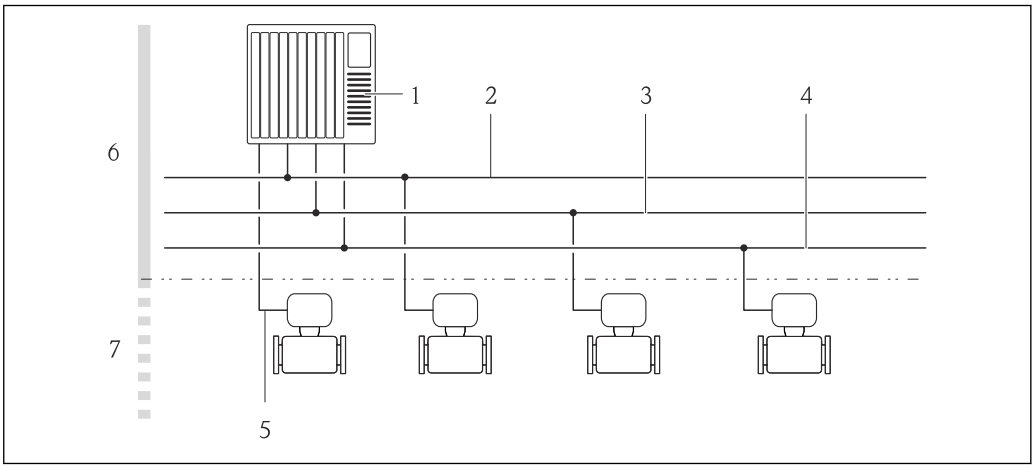

A0037833

1 *Possibilities for integrating measuring devices into a system*

1 *Control system (e.g. PLC)*
2 *EtherNet/IP*
3 *PROFIBUS DP*
4 *Modbus RS485*
5 *4 to 20 mA HART, pulse/frequency/switch output*
6 *Non-hazardous area*
7 *Non-hazardous area and Zone 2/Div. 2*

Safety

IT security

Our warranty is valid only if the device is installed and used as described in the Operating Instructions. The device is equipped with security mechanisms to protect it against any inadvertent changes to the settings.

IT security measures, which provide additional protection for the device and associated data transfer, must be implemented by the operators themselves in line with their security standards.

Device-specific IT security

The device offers a range of specific functions to support protective measures on the operator's side. These functions can be configured by the user and guarantee greater in-operation safety if used correctly. An overview of the most important functions is provided in the following section.

Protecting access via a password

Different passwords are available to protect write access to the device parameters or access to the device via the WLAN interface.

- User-specific access code
  Protect write access to the device parameters via the local display, Web browser or operating tool (e.g. FieldCare, DeviceCare). Access authorization is clearly regulated through the use of a user-specific access code.
- WLAN passphrase
  The network key protects a connection between an operating unit (e.g. notebook or tablet) and the device via the WLAN interface which can be ordered as an option.

User-specific access code

Write access to the device parameters via the local display or operating tool (e.g. FieldCare, DeviceCare) can be protected by the modifiable, user-specific access code.

WLAN passphrase: Operation as WLAN access point

A connection between an operating unit (e.g. notebook or tablet) and the device via the WLAN interface, which can be ordered as an optional extra, is protected by the network key. The WLAN authentication of the network key complies with the IEEE 802.11 standard.

When the device is delivered, the network key is pre-defined depending on the device. It can be changed via the **WLAN settings** submenu in the **WLAN passphrase** parameter.

General notes on the use of passwords

- The access code and network key supplied with the device should be changed during commissioning.
- Follow the general rules for generating a secure password when defining and managing the access code or network key.
- The user is responsible for the management and careful handling of the access code and network key.

Access via Web server

The device can be operated and configured via a Web browser with the integrated Web server. The connection is via the service interface (CDI-RJ45) or the WLAN interface. For device versions with the EtherNet/IP and PROFINET communication protocols, the connection can also be established via the terminal connection for signal transmission with EtherNet/IP or PROFINET (RJ45 plug).

The Web server is enabled when the device is delivered. The Web server can be disabled if necessary (e.g. after commissioning) via the **Web server functionality** parameter.

The device and status information can be hidden on the login page. This prevents unauthorized access to the information.

For detailed information on device parameters, see:
The "Description of Device Parameters" document → 107

Input

Measured variable

Direct measured variables

- Volume flow (proportional to induced voltage)
- Electrical conductivity

In custody transfer: only volume flow

Calculated measured variables

Mass flow

Measuring range

Typically v = 0.01 to 10 m/s (0.03 to 33 ft/s) with the specified accuracy

Electrical conductivity: ≥ 5 µS/cm for liquids in general

Flow characteristic values in SI units: DN 25 to 125 mm (1 to 4 in)

Nominal diameter		Recommended flow	Factory settings		
		min./max. full scale value (v ~ 0.3...10 m/s)	Full scale value current output (v ~ 2.5 m/s)	Pulse value (~ 2 Pulse/s at v ~ 2.5 m/s)	Low flow cut off (v ~ 0.04 m/s)
[mm]	[in]	[dm³/min]	[dm³/min]	[dm³]	[dm³/min]
25	1	9 to 300	75	0.5	1
32	–	15 to 500	125	1	2

Nominal diameter		Recommended flow	Factory settings		
		min./max. full scale value (v ~ 0.3...10 m/s)	Full scale value current output (v ~ 2.5 m/s)	Pulse value (~ 2 Pulse/s at v ~ 2.5 m/s)	Low flow cut off (v ~ 0.04 m/s)
[mm]	[in]	[dm³/min]	[dm³/min]	[dm³]	[dm³/min]
40	1 ½	25 to 700	200	1.5	3
50	2	35 to 1 100	300	2.5	5
65	–	60 to 2 000	500	5	8
80	3	90 to 3 000	750	5	12
100	4	145 to 4 700	1 200	10	20
125	–	220 to 7 500	1 850	15	30

Flow characteristic values in SI units: DN 150 to 3 000 mm (6 to 120 in)

Nominal diameter		Recommended flow	Factory settings		
		min./max. full scale value (v ~ 0.3...10 m/s)	Full scale value current output (v ~ 2.5 m/s)	Pulse value (~ 2 Pulse/s at v ~ 2.5 m/s)	Low flow cut off (v ~ 0.04 m/s)
[mm]	[in]	[m³/h]	[m³/h]	[m³]	[m³/h]
150	6	20 to 600	150	0.025	2.5
200	8	35 to 1 100	300	0.05	5
250	10	55 to 1 700	500	0.05	7.5
300	12	80 to 2 400	750	0.1	10
350	14	110 to 3 300	1 000	0.1	15
375	15	140 to 4 200	1 200	0.15	20
400	16	140 to 4 200	1 200	0.15	20
450	18	180 to 5 400	1 500	0.25	25
500	20	220 to 6 600	2 000	0.25	30
600	24	310 to 9 600	2 500	0.3	40
700	28	420 to 13 500	3 500	0.5	50
750	30	480 to 15 000	4 000	0.5	60
800	32	550 to 18 000	4 500	0.75	75
900	36	690 to 22 500	6 000	0.75	100
1000	40	850 to 28 000	7 000	1	125
–	42	950 to 30 000	8 000	1	125
1200	48	1 250 to 40 000	10 000	1.5	150
–	54	1 550 to 50 000	13 000	1.5	200
1400	–	1 700 to 55 000	14 000	2	225
–	60	1 950 to 60 000	16 000	2	250
1600	–	2 200 to 70 000	18 000	2.5	300
–	66	2 500 to 80 000	20 500	2.5	325
1800	72	2 800 to 90 000	23 000	3	350
–	78	3 300 to 100 000	28 500	3.5	450
2000	–	3 400 to 110 000	28 500	3.5	450

Nominal diameter		Recommended flow	Factory settings		
		min./max. full scale value (v ~ 0.3...10 m/s)	Full scale value current output (v ~ 2.5 m/s)	Pulse value (~ 2 Pulse/s at v ~ 2.5 m/s)	Low flow cut off (v ~ 0.04 m/s)
[mm]	[in]	[m³/h]	[m³/h]	[m³]	[m³/h]
–	84	3700 to 125000	31000	4.5	500
2200	–	4100 to 136000	34000	4.5	540
–	90	4300 to 143000	36000	5	570
2400	–	4800 to 162000	40000	5.5	650
–	96	5000 to 168000	42000	6	675
–	102	5700 to 190000	47500	7	750
2600	–	5700 to 191000	48000	7	775
–	108	6500 to 210000	55000	7	850
2800	–	6700 to 222000	55500	8	875
–	114	7100 to 237000	59500	8	950
3000	–	7600 to 254000	63500	9	1025
–	120	7900 to 263000	65500	9	1050

Flow characteristic values in SI units: DN 50 to 200 mm (2 to 8 in) for order code for "Design", option C "Fixed flange, constricted measuring tube, 0 x DN inlet/outlet runs"

Nominal diameter		Recommended flow	Factory settings		
		min./max. full scale value (v ~ 0.12...5 m/s)	Full scale value current output (v ~ 2.5 m/s)	Pulse value (~ 4 Pulse/s at v ~ 2.5 m/s)	Low flow cut off (v ~ 0.01 m/s)
[mm]	[in]	[dm³/min]	[dm³/min]	[dm³]	[dm³/min]
50	2	15 to 600	300	1.25	1.25
65	–	25 to 1000	500	2	2
80	3	35 to 1500	750	3	3.25
100	4	60 to 2400	1200	5	4.75
125	–	90 to 3700	1850	8	7.5
150	6	145 to 5400	2500	10	11
200	8	220 to 9400	5000	20	19

Flow characteristic values in SI units: DN 250 to 300 mm (10 to 12 in) for order code for "Design", option C "Fixed flange, constricted measuring tube, 0 x DN inlet/outlet runs"

Nominal diameter		Recommended flow	Factory settings		
		min./max. full scale value (v ~ 0.12...5 m/s)	Full scale value current output (v ~ 2.5 m/s)	Pulse value (~ 4 Pulse/s at v ~ 2.5 m/s)	Low flow cut off (v ~ 0.01 m/s)
[mm]	[in]	[m³/h]	[m³/h]	[m³]	[m³/h]
250	10	20 to 850	500	0.03	1.75
300	12	35 to 1300	750	0.05	2.75

Flow characteristic values in US units: DN 1 to 48 in (25 to 1200 mm)

Nominal diameter		Recommended flow	Factory settings		
		min./max. full scale value (v ~ 0.3...10 m/s)	Full scale value current output (v ~ 2.5 m/s)	Pulse value (~ 2 Pulse/s at v ~ 2.5 m/s)	Low flow cut off (v ~ 0.04 m/s)
[in]	[mm]	[gal/min]	[gal/min]	[gal]	[gal/min]
1	25	2.5 to 80	18	0.2	0.25
–	32	4 to 130	30	0.2	0.5
1 ½	40	7 to 185	50	0.5	0.75
2	50	10 to 300	75	0.5	1.25
–	65	16 to 500	130	1	2
3	80	24 to 800	200	2	2.5
4	100	40 to 1250	300	2	4
–	125	60 to 1950	450	5	7
6	150	90 to 2650	600	5	12
8	200	155 to 4850	1200	10	15
10	250	250 to 7500	1500	15	30
12	300	350 to 10600	2400	25	45
14	350	500 to 15000	3600	30	60
15	375	600 to 19000	4800	50	60
16	400	600 to 19000	4800	50	60
18	450	800 to 24000	6000	50	90
20	500	1000 to 30000	7500	75	120
24	600	1400 to 44000	10500	100	180
28	700	1900 to 60000	13500	125	210
30	750	2150 to 67000	16500	150	270
32	800	2450 to 80000	19500	200	300
36	900	3100 to 100000	24000	225	360
40	1000	3800 to 125000	30000	250	480
42	–	4200 to 135000	33000	250	600
48	1200	5500 to 175000	42000	400	600

Flow characteristic values in US units: DN 54 to 120 in (1400 to 3000 mm)

Nominal diameter		Recommended flow	Factory settings		
		min./max. full scale value (v ~ 0.3...10 m/s)	Full scale value current output (v ~ 2.5 m/s)	Pulse value (~ 2 Pulse/s at v ~ 2.5 m/s)	Low flow cut off (v ~ 0.04 m/s)
[in]	[mm]	[Mgal/d]	[Mgal/d]	[Mgal]	[Mgal/d]
54	–	9 to 300	75	0.0005	1.3
–	1400	10 to 340	85	0.0005	1.3
60	–	12 to 380	95	0.0005	1.3
–	1600	13 to 450	110	0.0008	1.7
66	–	14 to 500	120	0.0008	2.2
72	1800	16 to 570	140	0.0008	2.6

Nominal diameter		Recommended flow	Factory settings		
		min./max. full scale value (v ~ 0.3...10 m/s)	Full scale value current output (v ~ 2.5 m/s)	Pulse value (~ 2 Pulse/s at v ~ 2.5 m/s)	Low flow cut off (v ~ 0.04 m/s)
[in]	[mm]	[Mgal/d]	[Mgal/d]	[Mgal]	[Mgal/d]
78	–	18 to 650	175	0.0010	3.0
–	2000	20 to 700	175	0.0010	2.9
84	–	24 to 800	190	0.0011	3.2
–	2200	26 to 870	210	0.0012	3.4
90	–	27 to 910	220	0.0013	3.6
–	2400	31 to 1030	245	0.0014	4.0
96	–	32 to 1066	265	0.0015	4.0
102	–	34 to 1203	300	0.0017	5.0
–	2600	34 to 1212	305	0.0018	5.0
108	–	35 to 1300	340	0.0020	5.0
–	2800	42 to 1405	350	0.0020	6.0
114	–	45 to 1503	375	0.0022	6.0
–	3000	48 to 1613	405	0.0023	6.0
120	–	50 to 1665	415	0.0024	7.0

Flow characteristic values in US units: DN 2 to 12 in (50 to 300 mm) for order code for "Design", option C "Fixed flange, constricted measuring tube, 0 x DN inlet/outlet runs"

Nominal diameter		Recommended flow	Factory settings		
		min./max. full scale value (v ~ 0.12...5 m/s)	Full scale value current output (v ~ 2.5 m/s)	Pulse value (~ 4 Pulse/s at v ~ 2.5 m/s)	Low flow cut off (v ~ 0.01 m/s)
[in]	[mm]	[gal/min]	[gal/min]	[gal]	[gal/min]
2	50	4 to 160	75	0.3	0.35
–	65	7 to 260	130	0.5	0.6
3	80	10 to 400	200	0.8	0.8
4	100	16 to 650	300	1.2	1.25
–	125	24 to 1000	450	1.8	2
6	150	40 to 1400	600	2.5	3
8	200	60 to 2500	1200	5	5
10	250	90 to 3700	1500	6	8
12	300	155 to 5700	2400	9	12

Recommended measuring range

Flow limit → 53

For custody transfer, the applicable approval determines the permitted measuring range, the pulse value and the low flow cut off.

Operable flow range

Over 1000 : 1

For custody transfer, the operable flow range is 100 : 1 to 630 : 1, depending on the nominal diameter. Further details are specified by the applicable approval.

Input signal

External measured values

Various pressure transmitters and temperature measuring devices can be ordered from Endress +Hauser: see "Accessories" section → 107

It is recommended to read in external measured values to calculate the following measured variables: Mass flow

HART protocol

The measured values are written from the automation system to the measuring device via the HART protocol. The pressure transmitter must support the following protocol-specific functions:
- HART protocol
- Burst mode

Digital communication

The measured values can be written from the automation system to the measuring via:
- PROFIBUS DP
- Modbus RS485
- EtherNet/IP

Status input

Maximum input values	▪ DC 30 V ▪ 6 mA
Response time	Configurable: 5 to 200 ms
Input signal level	▪ Low signal (low): DC −3 to +5 V ▪ High signal (high): DC 12 to 30 V
Assignable functions	▪ Off ▪ Reset totalizers 1-3 separately ▪ Reset all totalizers ▪ Flow override

Output

Output signal

Current output

Current output	Can be set as: ▪ 4 to 20 mA NAMUR ▪ 4 to 20 mA US ▪ 4 to 20 mA HART ▪ 0 to 20 mA
Maximum output values	▪ DC 24 V (when idle) ▪ 22.5 mA
Load	0 to 700 Ω
Resolution	0.5 µA

Damping	Configurable: 0.07 to 999 s
Assignable measured variables	▪ Volume flow ▪ Mass flow ▪ Corrected volume flow ▪ Flow velocity ▪ Conductivity [1] ▪ Corrected conductivity [1] ▪ Electronics temperature ▪ Reference electrode potential [1] ▪ Coil current rise time [1] ▪ Noise [1] ▪ Buildup measured value [1] ▪ Test points 1-3

1) Visible depending on order options or device settings

Pulse/frequency/switch output

Function	▪ With the order code for "Output; Input", option **H**: output 2 can be set as a pulse or frequency output ▪ With the order code for "Output; Input", option **I**: output 2 and 3 can be set as a pulse, frequency or switch output ▪ With the order code for "Output; Input", option **J**: output 2 firmly assigned as certified pulse output
Version	Passive, open collector
Maximum input values	▪ DC 30 V ▪ 250 mA
Voltage drop	At 25 mA: ≤ DC 2 V
Pulse output	
Pulse width	Configurable: 0.05 to 2 000 ms
Maximum pulse rate	10 000 Impulse/s
Pulse value	Configurable
Assignable measured variables	▪ Volume flow ▪ Mass flow ▪ Corrected volume flow
Frequency output	
Output frequency	Configurable: 0 to 12 500 Hz
Damping	Configurable: 0 to 999 s
Pulse/pause ratio	1:1
Assignable measured variables	▪ Volume flow ▪ Mass flow ▪ Corrected volume flow ▪ Flow velocity ▪ Conductivity [1] ▪ Corrected conductivity [1] ▪ Electronics temperature ▪ Noise [1] ▪ Coil current rise time [1] ▪ Reference electrode potential [1] ▪ Buildup measured value [1] ▪ Test points 1-3
Switch output	
Switching behavior	Binary, conductive or non-conductive
Switching delay	Configurable: 0 to 100 s

Number of switching cycles	Unlimited

Assignable functions	▪ Off
	▪ On
	▪ Diagnostic behavior
	▪ Limit value:
	  ▪ Off
	  ▪ Volume flow
	  ▪ Corrected volume flow
	  ▪ Mass flow
	  ▪ Flow velocity
	  ▪ Conductivity [1)]
	  ▪ Corrected conductivity [1)]
	  ▪ Totalizer 1-3
	  ▪ Electronics temperature
	▪ Flow direction monitoring
	▪ Status:
	  ▪ Empty pipe detection
	  ▪ Low flow cut off
	  ▪ Buildup limit value [1)]

1) Visible depending on order options or device settings

PROFIBUS DP

Signal encoding	NRZ code
Data transmission	9.6 kBaud...12 MBaud

Modbus RS485

Physical interface	In accordance with EIA/TIA-485-A standard
Terminating resistor	Integrated, can be activated via DIP switch on the transmitter electronics module

Ethernet/IP

Standards	In accordance with IEEE 802.3

Signal on alarm

Depending on the interface, failure information is displayed as follows:

Current output 4 to 20 mA

4 to 20 mA

Failure mode	Choose from: ▪ 4 to 20 mA in accordance with NAMUR recommendation NE 43 ▪ 4 to 20 mA in accordance with US ▪ Min. value: 3.59 mA ▪ Max. value: 22.5 mA ▪ Definable value between: 3.59 to 22.5 mA ▪ Actual value ▪ Last valid value

0 to 20 mA

Failure mode	Choose from: ▪ Max. alarm: 22 mA ▪ Definable value between: 0 to 22.5 mA

HART current output

Device diagnostics	Device condition can be read out via HART Command 48

Pulse/frequency/switch output

Pulse output	
Fault mode	Choose from: ▪ Actual value ▪ No pulses
Frequency output	
Fault mode	Choose from: ▪ Actual value ▪ 0 Hz ▪ Definable value between: 0 to 12 500 Hz
Switch output	
Fault mode	Choose from: ▪ Current status ▪ Open ▪ Closed

Modbus RS485

Failure mode	Choose from: ▪ NaN value instead of current value ▪ Last valid value

PROFIBUS DP

Status and alarm messages	Diagnostics in accordance with PROFIBUS PA Profile 3.02

EtherNet/IP

Device diagnostics	Device condition can be read out in Input Assembly

Local display

Plain text display	With information on cause and remedial measures
Backlight	Red lighting indicates a device error.

Status signal as per NAMUR recommendation NE 107

Interface/protocol

- Via digital communication:
  - HART protocol
  - PROFIBUS DP
  - Modbus RS485
  - EtherNet/IP
- Via service interface
  - CDI-RJ45 service interface
  - WLAN interface

Plain text display	With information on cause and remedial measures

Additional information on remote operation → 96

Web browser

Plain text display	With information on cause and remedial measures

Light emitting diodes (LED)

Status information	Status indicated by various light emitting diodes The following information is displayed depending on the device version: ▪ Supply voltage active ▪ Data transmission active ▪ Device alarm/error has occurred ▪ EtherNet/IP network available ▪ EtherNet/IP connection established

Low flow cut off

The switch points for low flow cut off are user-selectable.

Galvanic isolation

The following connections are galvanically isolated from each other:
- Inputs
- Outputs
- Power supply

Protocol-specific data

HART

Manufacturer ID	0x11
Device type ID	0x1169
HART protocol revision	
Device description files (DTM, DD)	Information and files available at:
HART load	Min. 250 Ω
Dynamic variables PV, SV, TV, QV	▪ Read out the dynamic variables via HART command 3 ▪ The measured variables can be freely assigned to the dynamic variables
Device variables	▪ Read out the device variables via HART command 9 ▪ The measured variables can be freely assigned ▪ A maximum of 8 device variables can be transmitted
System integration	Operating Instructions for the device → 107

PROFIBUS DP

Manufacturer ID	0x11
Ident number	0x1562
Profile version	
Device description files (GSD, DTM, DD)	Information and files available at:
Output values	Output values (from the measuring device to the automation system) ▪ 4 Analog input ▪ 2 Digital input ▪ 3 Totalizer

Input values	Input values (from the automation system to the measuring device) ▪ 2 Analog output (fixed assignment) ▪ 2 Digital output (fixed assignment) ▪ 3 Totalizer
Device address configuration options	Configuration of the device address ▪ Hardware: DIP switches on the I/O electronics module ▪ Software: Via operating tools (e.g. FieldCare)
Supported functions	▪ Identification & Maintenance: Simple device identification via control system and nameplate ▪ PROFIBUS upload/download: Reading and writing parameters is up to ten times faster with PROFIBUS upload/download ▪ Condensed status: Simple, self-explanatory diagnostic information through categorization of diagnostic messages that appear
System integration	Operating Instructions for the device → 🖹 107

Modbus RS485

Protocol	Modbus Applications Protocol Specification V1.1
Device type	Slave
Slave address range	1 to 247
Broadcast address range	0
Function codes	▪ 03: Read holding register ▪ 04: Read input register ▪ 06: Write single registers ▪ 08: Diagnostics ▪ 16: Write multiple registers ▪ 23: Read/write multiple registers
Broadcast messages	Supported by the following function codes: ▪ 06: Write single registers ▪ 16: Write multiple registers ▪ 23: Read/write multiple registers
Supported baud rate	▪ 1200 BAUD ▪ 2400 BAUD ▪ 4800 BAUD ▪ 9600 BAUD ▪ 19200 BAUD ▪ 38400 BAUD ▪ 57600 BAUD ▪ 115200 BAUD
Data transmission mode	▪ ASCII ▪ RTU
Data access	Each device parameter can be accessed via Modbus RS485. For detailed information on the "Modbus RS485 register information", see the Description of Device Parameters.→ 🖹 107
System integration	Operating Instructions for the device → 🖹 107

Ethernet/IP

Protocol	▪ The CIP Networks Library Volume 1: Common Industrial Protocol ▪ The CIP Networks Library Volume 2: Ethernet/IP Adaptation of CIP
Communication type	▪ 10Base-T ▪ 100Base-TX
Device profile	Generic device (product type: 0x2B)
Manufacturer ID	0x49E

Device type ID	0x1069
Baud rates	Automatic 10/100 Mbit with half-duplex and full-duplex detection
Polarity	Auto-polarity for automatic correction of crossed TxD and RxD pairs
Supported CIP connections	Max. 3 connections
Explicit connections	Max. 5 connections
I/O connections	Max. 6 connections (scanner)
Configuration options for measuring device	Configuration options for measuring device ▪ DIP switches on the electronics module for IP addressing ▪ Manufacturer-specific software (FieldCare) ▪ Custom Add-on Profile for Rockwell Automation control systems ▪ Web browser ▪ Electronic Data Sheet (EDS) integrated in the measuring device
Ethernet interface configuration options	Configuration of the Ethernet interface ▪ Speed: 10 MBit, 100 MBit, auto (factory setting) ▪ Duplex: half-duplex, full-duplex, auto (factory setting)
Device address configuration options	Configuration of the device address ▪ DIP switches on the electronics module for IP addressing (last octet) ▪ DHCP ▪ Manufacturer-specific software (FieldCare) ▪ Custom Add-on Profile for Rockwell Automation control systems ▪ Web browser ▪ Ethernet/IP tools, e.g. RSLinx (Rockwell Automation)
Device Level Ring (DLR)	No
Assembly	▪ Legacy Input Assembly Fix (Assem 100) ▪ Legacy Input Assembly Configurable (Assem 101) ▪ Legacy Output Assembly Fix (Assem 102) ▪ Legacy Configuration Assembly (Assem 104) ▪ Input Assembly Fix (Assem 120) ▪ Input Assembly Configurable (Assem 121) ▪ Output Assembly Fix (Assem 122) ▪ Configuration Assembly (Assem 124) ▪ Volume Flow Extended Fix Input (Assem 126) ▪ Volume Flow Universal Fix Input (Assem 127) ▪ Dummy Output Assembly Fix (Assem 199)
Requested Packet Interval (RPI)	5 ms to 10 s (factory setting: 20 ms)
System integration	Operating Instructions for the device → 🖹 107

Power supply

Terminal assignment

Transmitter: 0 to 20 mA/4 to 20 mA HART

The sensor can be ordered with terminals.

Connection methods available		Possible options for order code "Electrical connection"
Outputs	**Power supply**	
Terminals	Terminals	▪ Option **A**: coupling M20x1 ▪ Option **B**: thread M20x1 ▪ Option **C**: thread G ½" ▪ Option **D**: thread NPT ½"

Supply voltage

Order code "Power supply"	Terminal numbers	terminal voltage		Frequency range
Option **L** (wide range power unit)	1 (L+/L), 2 (L-/N)	DC 24 V	±25%	–
		AC 24 V	±25%	50/60 Hz, ±4 Hz
		AC 100 to 240 V	−15 to +10%	50/60 Hz, ±4 Hz

Signal transmission current output 0 to 20 mA/4 to 20 mA HART and additional outputs and inputs

Order code for "Output" and "Input"	Terminal numbers							
	Output 1		Output 2		Output 3		Input	
	26 (+)	27 (-)	24 (+)	25 (-)	22 (+)	23 (-)	20 (+)	21 (-)
Option **H**	Current output ▪ 4 to 20 mA HART (active) ▪ 0 to 20 mA (active)		Pulse/frequency output (passive)		Switch output (passive)		-	
Option **I**	Current output ▪ 4 to 20 mA HART (active) ▪ 0 to 20 mA (active)		Pulse/frequency/ switch output (passive)		Pulse/frequency/ switch output (passive)		Status input	
Option **J**	Current output ▪ 4 to 20 mA HART (active) ▪ 0 to 20 mA (active)		Permanently assigned: Pulse output adjusted (passive)		Switch output		Status input	

Transmitter: PROFIBUS DP

The sensor can be ordered with terminals.

Connection methods available		Possible options for order code "Electrical connection"
Outputs	Power supply	
Terminals	Terminals	▪ Option **A**: coupling M20x1 ▪ Option **B**: thread M20x1 ▪ Option **C**: thread G ½" ▪ Option **D**: thread NPT ½"

Supply voltage

Order code "Power supply"	Terminal numbers	terminal voltage		Frequency range
Option **L** (wide range power unit)	1 (L+/L), 2 (L-/N)	DC 24 V	±25%	–
		AC 24 V	±25%	50/60 Hz, ±4 Hz
		AC 100 to 240 V	−15 to +10%	50/60 Hz, ±4 Hz

PROFIBUS DP signal transmission

Order code for "Output" and "Input"	Terminal numbers	
	26 (RxD/TxD-P)	27 (RxD/TxD-N)
Option **L**	B	A
Order code for "Output": Option L: PROFIBUS DP, for use in non-hazardous areas and Zone 2/div. 2		

Transmitter: Modbus RS485

The sensor can be ordered with terminals.

Connection methods available		Possible options for order code "Electrical connection"
Outputs	**Power supply**	
Terminals	Terminals	▪ Option **A**: coupling M20x1 ▪ Option **B**: thread M20x1 ▪ Option **C**: thread G ½" ▪ Option **D**: thread NPT ½"

Supply voltage

Order code "Power supply"	Terminal numbers	terminal voltage		Frequency range
Option **L** (wide range power unit)	1 (L+/L), 2 (L-/N)	DC 24 V	±25%	–
		AC 24 V	±25%	50/60 Hz, ±4 Hz
		AC 100 to 240 V	−15 to +10%	50/60 Hz, ±4 Hz

Signal transmission Modbus RS485 and additional outputs

Order code for "Output" and "Input"	Terminal numbers							
	26 (+)	27 (-)	24 (+)	25 (-)	22 (+)	23 (-)	20 (+)	21 (-)
Option **M**	Modbus		-		-		-	
	B	A						
Option **O**	Current output 4 to 20 mA (active)		Pulse/frequency/ switch output (passive)		Pulse/frequency/ switch output (passive)		Modbus	
							B	A
Option **P**	Current output 4 to 20 mA (active)		Pulse output adjusted (passive)		Pulse/frequency/ switch output (passive)		Modbus	
							B	A

Transmitter: Ethernet/IP

The transmitter can be ordered with terminals or a device plug.

Connection methods available		Possible options for order code "Electrical connection"
Outputs	**Power supply**	
Ethernet/IP (RJ45 plug)	Terminals	Option **D**: thread NPT ½"
Connectors → 🖹 22	Terminals	▪ Option **L**: plug M12x1 + thread NPT ½" ▪ Option **N**: plug M12x1 + coupling M20 ▪ Option **P**: plug M12x1 + thread G ½" ▪ Option **U**: plug M12x1 + thread M20

Supply voltage

Order code "Power supply"	Terminal numbers	terminal voltage		Frequency range
Option **L** (wide range power unit)	1 (L+/L), 2 (L-/N)	DC 24 V	±25%	–
		AC 24 V	±25%	50/60 Hz, ±4 Hz
		AC 100 to 240 V	−15 to +10%	50/60 Hz, ±4 Hz

Ethernet/IP signal transmission

Order code for "Output"	Connection via
Option **N**	Ethernet/IP: RJ45 or M12 connector

Remote version

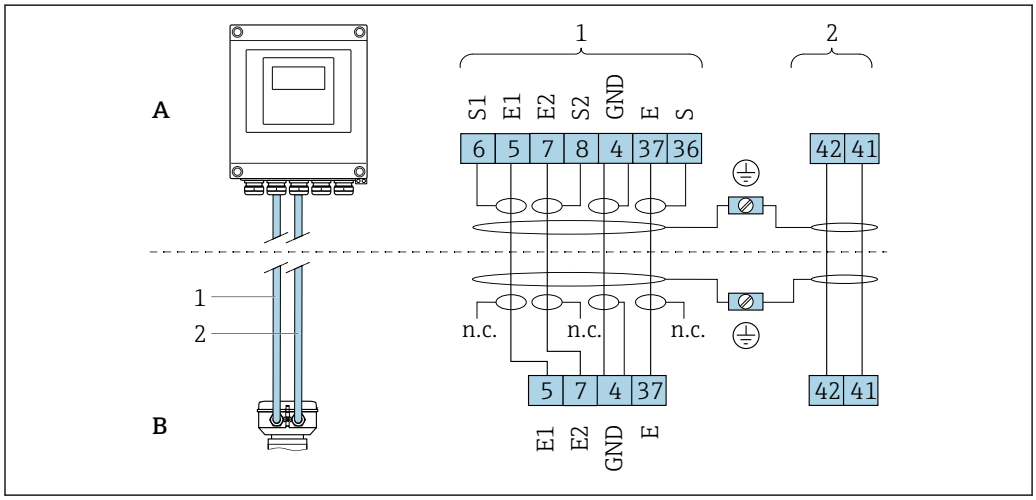

2 *Remote version terminal assignment*

A Transmitter wall-mount housing
B Sensor connection housing
1 Electrode cable
2 Coil current cable
n.c. Not connected, insulated cable shields

Terminal No. and cable colors: 6/5 = brown; 7/8 = white; 4 = green; 36/37 = yellow

Pin assignment, device plug

Order codes for the M12x1 connectors; see the "Order code for electrical connection" column: Ethernet/IP → 21

Ethernet/IP

Device plug for signal transmission (device side)

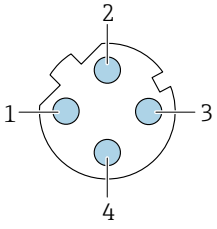

Pin		Assignment	Coding	Plug/socket
1	+	Tx	D	Socket
2	+	Rx		
3	-	Tx		
4	-	Rx		

Recommended plug:
- Binder, series 825, part no. 99 3729 810 04
- Phoenix, part no. 1543223 SACC-M12MSD-4Q
- The device plug is not permitted in the hazardous area, Class I Division 2. The device plug may only be used in the non-hazardous area (General Purpose).

Supply voltage

Transmitter

Order code for "Power supply"	terminal voltage		Frequency range
Option **L**	DC 24 V	±25%	–
	AC 24 V	±25%	50/60 Hz, ±4 Hz
	AC 100 to 240 V	−15 to +10%	50/60 Hz, ±4 Hz

Power consumption

Order code for "Output"	Maximum power consumption
Option **H**: 4-20mA HART, pulse/frequency output, switch output	30 VA/8 W
Option **I**: 4-20mA HART, 2 x pulse/frequency/switch output, status input	30 VA/8 W
Option **J**: 4-20mA HART, certified pulse output, switch output, status input	30 VA/8 W
Option **L**: PROFIBUS DP	30 VA/8 W
Option **M**: Modbus RS485	30 VA/8 W
Option **O**: Modbus RS485, 4-20mA, 2 x pulse/ frequency/switch output	30 VA/8 W
Option **P**: Modbus RS485, 4-20mA, certified pulse output, pulse/frequency/switch output	30 VA/8 W
Option **N**: Ethernet/IP	30 VA/8 W

Current consumption

Transmitter

Order code for "Power supply"	Maximum Current consumption	Maximum switch-on current
Option **L**: AC 100 to 240 V	145 mA	25 A (< 5 ms)
Option **L**: AC/DC 24 V	350 mA	27 A (< 5 ms)

Device fuse

Fine-wire fuse (slow-blow):
- DC 24 V: T1A
- AC 100 to 240 V: T1A

Power supply failure

- Totalizers stop at the last value measured.
- Depending on the device version, the configuration is retained in the device memory or in the pluggable data memory (HistoROM DAT).
- Error messages (incl. total operated hours) are stored.

Overcurrent protection element

The device must be operated with a dedicated circuit breaker, as it does not have an ON/OFF switch of its own.
- The circuit breaker must be easy to reach and labeled accordingly.
- Permitted nominal current of the circuit breaker: 2 A up to maximum 10 A.

Electrical connection

Terminal connection for transmitter

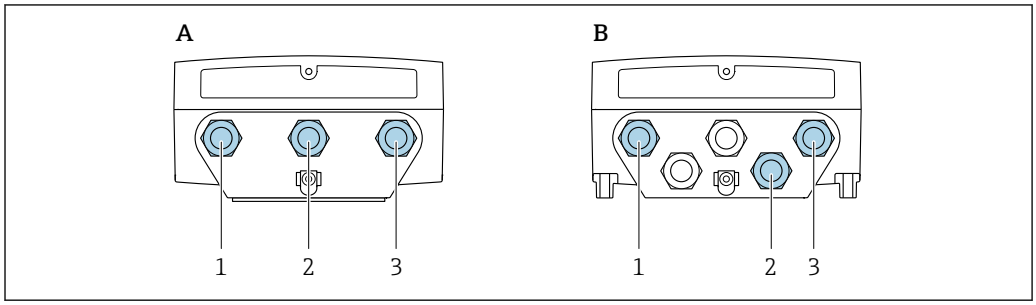

3 *Supply voltage and signal transmission connection*

A Compact version
B Remote version wall-mount housing
1 Cable entry for supply voltage
2 Cable entry for signal transmission
3 Cable entry for signal transmission

Remote version connection

Connecting cable

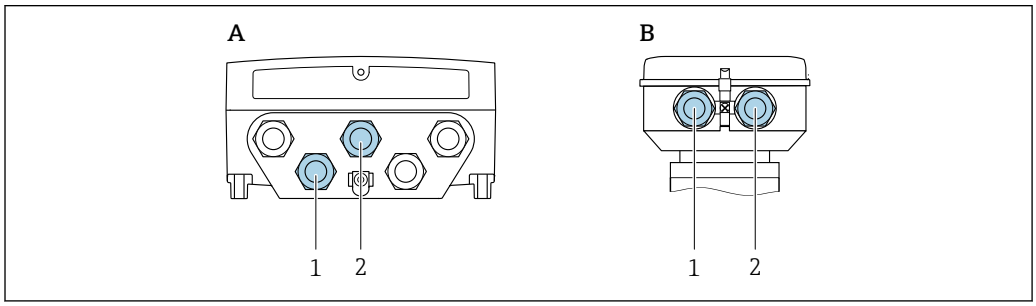

4 *Connecting cable connection: electrode and coil current cable*

A Transmitter wall-mount housing
B Sensor connection housing
1 Electrode cable
2 Coil current cable

- Fix the cable run or route it in an armored conduit.
  Cable movements can influence the measuring signal especially in the case of low fluid conductivities.
- Route the cable well clear of electrical machines and switching elements.
- Ensure potential equalization between the sensor and transmitter → 28.

Connection examples

Current output 4 to 20 mA HART

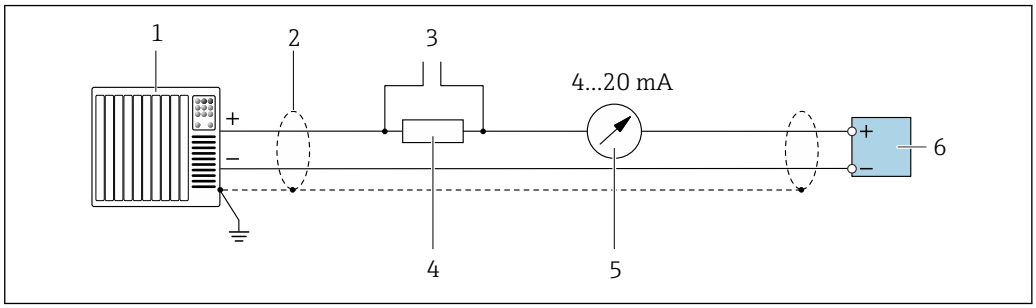

5 *Connection example for 4 to 20 mA HART current output (active)*

1 *Automation system with current input (e.g. PLC)*
2 *Ground cable shield at one end. The cable shield must be grounded at both ends to comply with EMC requirements; observe cable specifications*
3 *Connection for HART operating devices → 96*
4 *Resistor for HART communication (≥ 250 Ω): observe maximum load → 13*
5 *Analog display unit: observe maximum load → 13*
6 *Transmitter*

Current output 4 to 20 mA

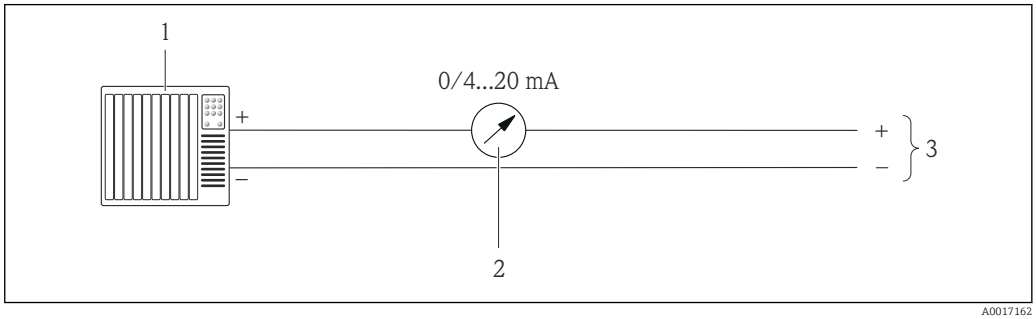

6 *Connection example for 0 to 20 mA (active) and 4 to 20 mA (active) current output*

1 *Automation system with current input (e.g. PLC)*
2 *Analog display unit: observe maximum load*
3 *Transmitter*

Pulse/frequency output

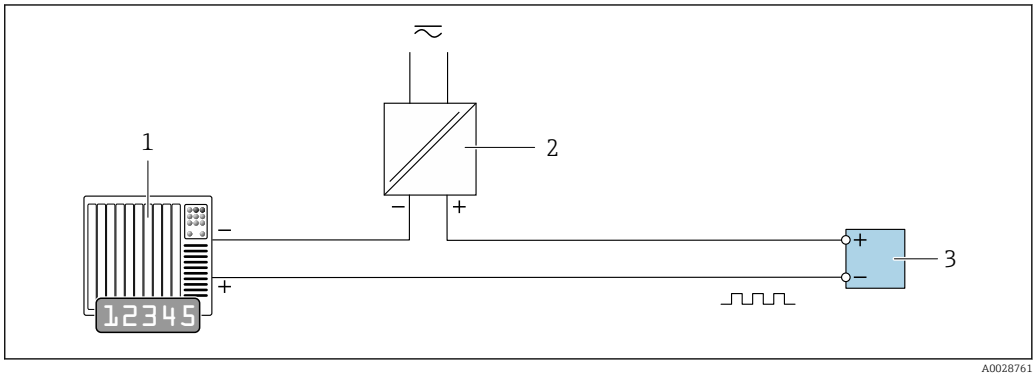

7 *Connection example for pulse/frequency output (passive)*

1 *Automation system with pulse/frequency input (e.g. PLC with 10 kΩ pull-up or pull-down resistor)*
2 *Power supply*
3 *Transmitter: observe input values → 14*

Switch output

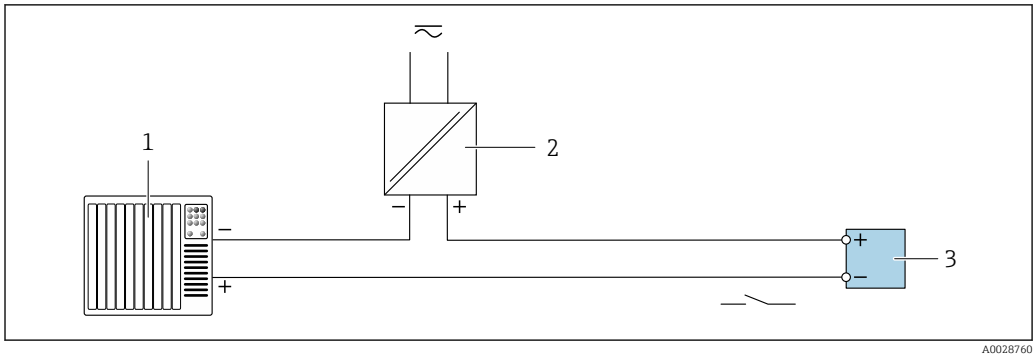

8 Connection example for switch output (passive)

1 Automation system with switch input (e.g. PLC with a 10 kΩ pull-up or pull-down resistor)
2 Power supply
3 Transmitter: observe input values → 14

PROFIBUS DP

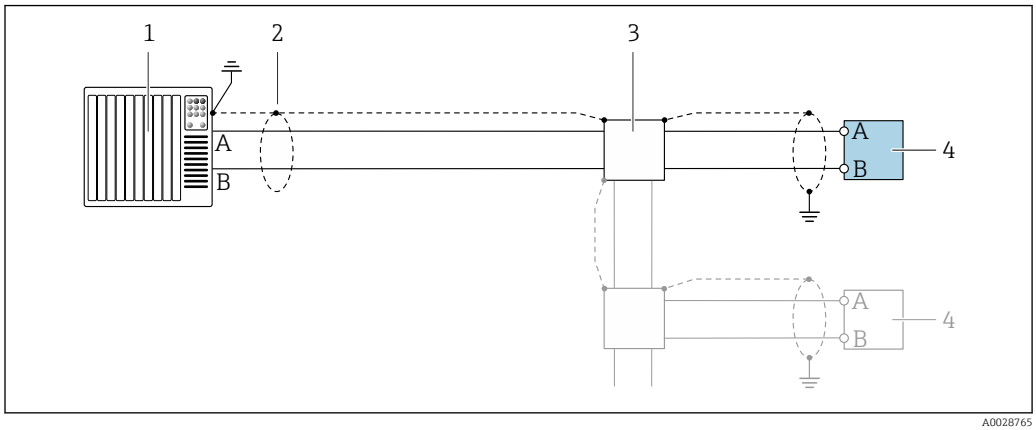

9 Connection example for PROFIBUS DP, non-hazardous area and Zone 2/Div. 2

1 Control system (e.g. PLC)
2 Cable shield provided at one end. The cable shield must be grounded at both ends to comply with EMC requirements; observe cable specifications
3 Distribution box
4 Transmitter

If baud rates > 1.5 MBaud an EMC cable entry must be used and the cable shield must continue as far as the terminal wherever possible.

Modbus RS485

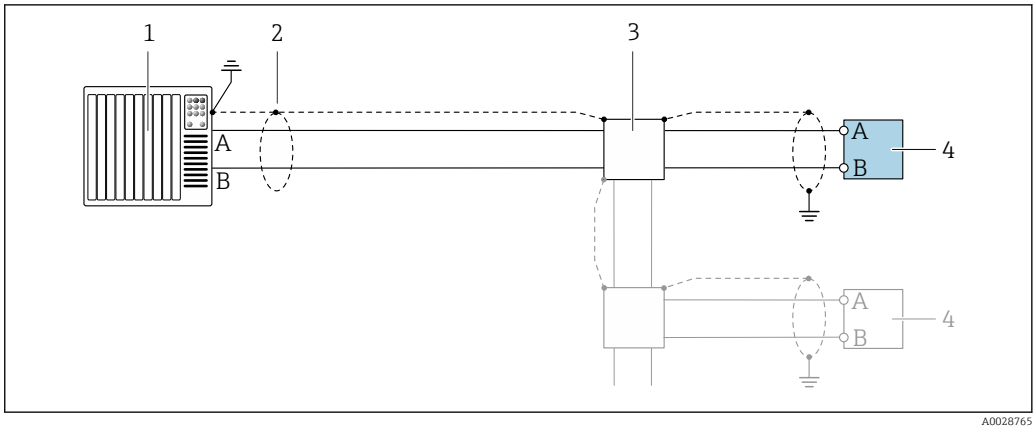

10 Connection example for Modbus RS485, non-hazardous area and Zone 2/Div. 2

1 Control system (e.g. PLC)
2 Ground cable shield at one end. The cable shield must be grounded at both ends to comply with EMC requirements; observe cable specifications
3 Distribution box
4 Transmitter

EtherNet/IP

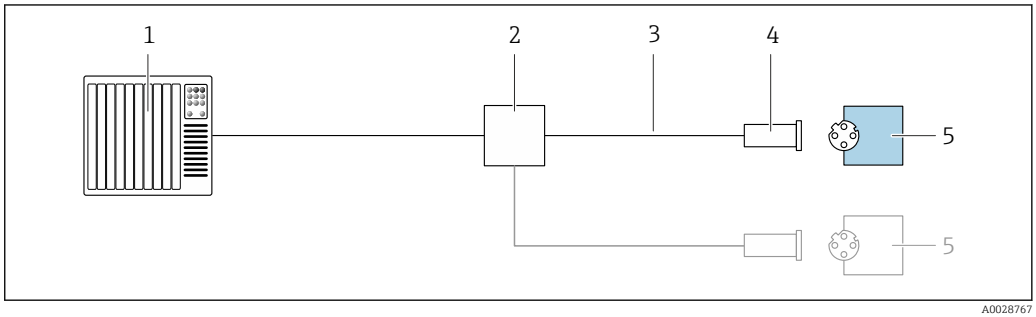

11 Connection example for EtherNet/IP

1 Control system (e.g. PLC)
2 Ethernet switch
3 Observe cable specifications
4 Device plug
5 Transmitter

Status input

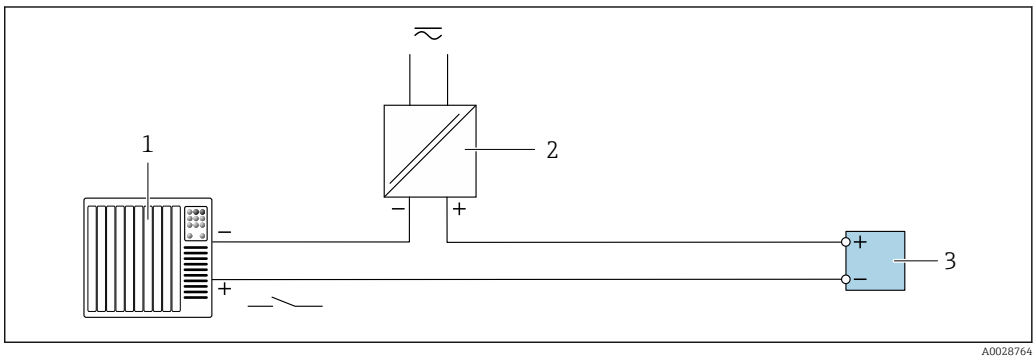

12 Connection example for status input

1 Automation system with status output (e.g. PLC)
2 Power supply
3 Transmitter

Potential equalization

Introduction

Correct potential equalization (equipotential bonding) is a prerequisite for stable and reliable flow measurement. Inadequate or incorrect potential equalization can result in device failure and present a safety hazard.

The following requirements must be observed to ensure correct, trouble-free measurement:
- The principle that the medium, the sensor and the transmitter must be at the same electrical potential applies.
- Take in-company grounding guidelines, materials and the grounding conditions and potential conditions of the pipe into consideration.
- The necessary potential equalization connections must be established using a ground cable with a minimum cross-section of 6 mm^2 (0.0093 in^2) and a cable lug.
- In the case of remote device versions, the ground terminal in the example always refers to the sensor and not to the transmitter.

You can order accessories such as ground cables and ground disks directly from Endress+Hauser → 104

Abbreviations used

- PE (Protective Earth): potential at the protective earth terminals of the device
- P_P (Potential Pipe): potential of the pipe, measured at the flanges
- P_M (Potential Medium): potential of the medium

Connection examples for standard situations

Unlined and grounded metal pipe

- Potential equalization is via the measuring pipe.
- The medium is set to ground potential.

Starting conditions:
- Pipes are correctly grounded on both sides.
- Pipes are conductive and at the same electrical potential as the medium

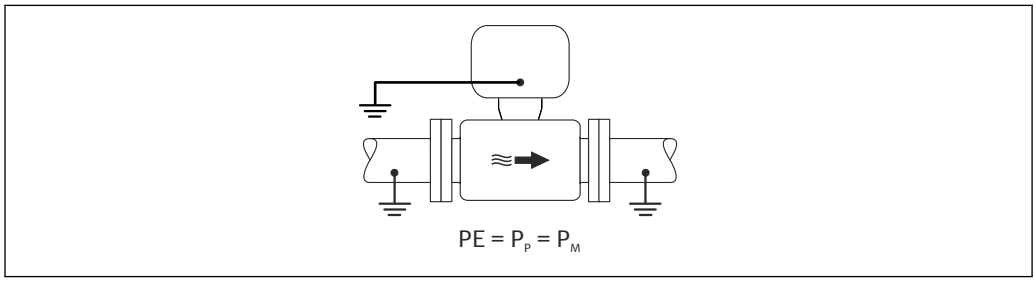

A0044854

▶ Attach the connection housing of the transmitter or sensor to ground potential by means of the ground terminal provided for this purpose.

Promag L, W: Metal pipe without liner

- Potential equalization is via the ground terminal and pipe flanges.
- The medium is set to ground potential.

Starting conditions:
- Pipes are not sufficiently grounded.
- Pipes are conductive and at the same electrical potential as the medium

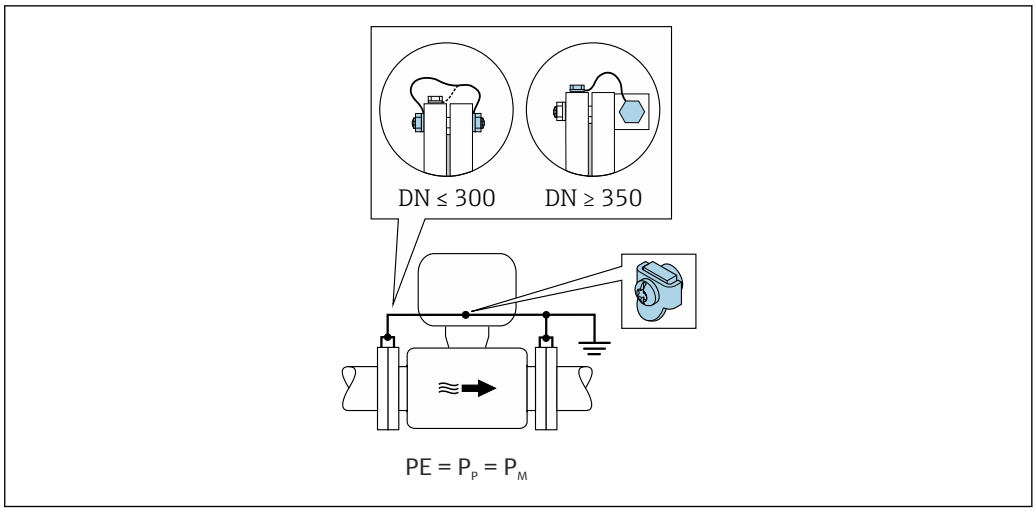

A0042089

1. Connect both sensor flanges to the pipe flange via a ground cable and ground them.
2. Attach the connection housing of the transmitter or sensor to ground potential by means of the ground terminal provided for this purpose.
3. For DN ≤ 300 (12"): Mount the ground cable directly on the conductive flange coating of the sensor with the flange screws.
4. For DN ≥ 350 (14"): Mount the ground cable directly on the metal transport bracket. Observe the screw tightening torques: see the Brief Operating Instructions for the sensor.

Plastic pipe or pipe with insulating liner

- Potential equalization is via the ground terminal and ground disks.
- The medium is set to ground potential.

Starting conditions:
- The pipe has an insulating effect.
- Low-impedance medium grounding close to the sensor is not guaranteed.
- Equalizing currents through the medium cannot be ruled out.

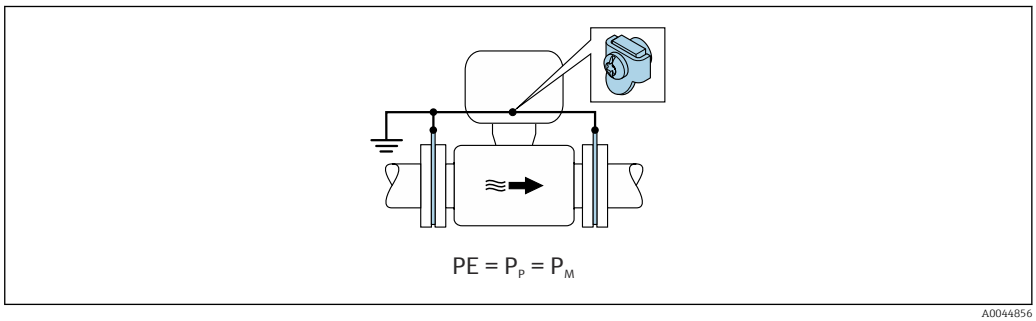

A0044856

1. Connect the ground disks to the ground terminal of the transmitter or sensor connection housing via the ground cable.
2. Connect the connection to ground potential.

Connection example with the potential of medium not equal to protective ground

In these cases, the medium potential can differ from the potential of the device.

Metal, ungrounded pipe

The sensor and transmitter are installed in a way that provides electrical insulation from PE, e.g. applications for electrolytic processes or systems with cathodic protection.

Starting conditions:
- Unlined metal pipe
- Pipes with an electrically conductive liner

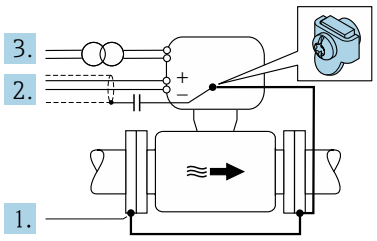

A0042253

1. Connect the pipe flanges and transmitter via the ground cable.
2. Route the shielding of the signal lines via a capacitor (recommended value 1.5µF/50V).
3. Device connected to power supply such that it is floating in relation to the protective earth (isolation transformer). This measure is not required in the case of 24V DC supply voltage without PE (= SELV power unit).

Connection examples with the potential of medium not equal to protective ground with the "Floating measurement" option

In these cases, the medium potential can differ from the potential of the device.

Introduction

The "Floating measurement" option enables the galvanic isolation of the measuring system from the device potential. This minimizes harmful equalizing currents caused by differences in potential between the medium and the device. The "Floating measurement" is optionally available: order code for "Sensor option", option CV

Operating conditions for the use of the "Floating measurement" option

Device version	Compact version and remote version (length of connecting cable ≤ 10 m)
Differences in voltage between medium potential and device potential	As small as possible, usually in the mV range
Alternating voltage frequencies in the medium or at ground potential (PE)	Below typical power line frequency in the country

To achieve the specified conductivity measurement accuracy, a conductivity calibration is recommended when the device is installed.

A full pipe adjustment is recommended when the device is installed.

Plastic pipe

Sensor and transmitter are correctly grounded. A difference in potential can occur between the medium and protective earth. Potential equalization between P_M and PE via the reference electrode is minimized with the "Floating measurement" option.

Starting conditions:
- The pipe has an insulating effect.
- Equalizing currents through the medium cannot be ruled out.

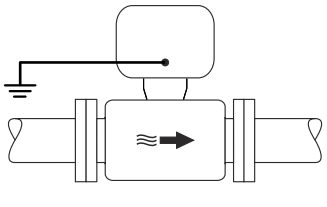

A0044855

1. Use the "Floating measurement" option, while also observing the operating conditions for floating measurement.
2. Attach the connection housing of the transmitter or sensor to ground potential by means of the ground terminal provided for this purpose.

Metal, ungrounded pipe with insulating liner

The sensor and transmitter are installed in a way that provides electrical insulation from PE. The medium and pipe have different potentials. The "Floating measurement" option minimizes harmful equalizing currents between P_M and P_P via the reference electrode.

Starting conditions:
- Metal pipe with insulating liner
- Equalizing currents through the medium cannot be ruled out.

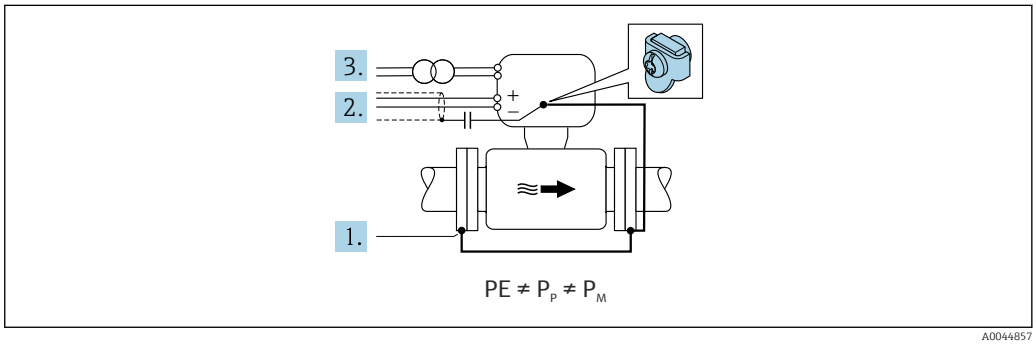

A0044857

1. Connect the pipe flanges and transmitter via the ground cable.
2. Route the shielding of the signal cables via a capacitor (recommended value 1.5µF/50V).
3. Device connected to power supply such that it is floating in relation to the protective earth (isolation transformer). This measure is not required in the case of 24V DC supply voltage without PE (= SELV power unit).
4. Use the "Floating measurement" option, while also observing the operating conditions for floating measurement.

Terminals

Transmitter
- Supply voltage cable: plug-in spring terminals for wire cross-sections 0.5 to 2.5 mm² (20 to 14 AWG)
- Signal cable: plug-in spring terminals for wire cross-sections 0.5 to 2.5 mm² (20 to 14 AWG)
- Electrode cable: spring terminals for wire cross-sections 0.5 to 2.5 mm² (20 to 14 AWG)
- Coil current cable: spring terminals for wire cross-sections 0.5 to 2.5 mm² (20 to 14 AWG)

Sensor connection housing
Spring terminals for wire cross-sections 0.5 to 2.5 mm² (20 to 14 AWG)

Cable entries

Cable entry thread
- M20 x 1.5
- Via adapter:
  - NPT ½"
  - G ½"

Cable gland
- For standard cable: M20 × 1.5 with cable ϕ 6 to 12 mm (0.24 to 0.47 in)
- For armored cable: M20 × 1.5 with cable ϕ 9.5 to 16 mm (0.37 to 0.63 in)

If metal cable entries are used, use a grounding plate.

Cable specification

Permitted temperature range
- The installation guidelines that apply in the country of installation must be observed.
- The cables must be suitable for the minimum and maximum temperatures to be expected.

Power supply cable (incl. conductor for the inner ground terminal)

Standard installation cable is sufficient.

Signal cable

Current output 0/4 to 20 mA

Standard installation cable is sufficient.

Current output 4 to 20 mA HART

A shielded cable is recommended. Observe grounding concept of the plant.

Pulse /frequency /switch output

Standard installation cable is sufficient.

Status input

Standard installation cable is sufficient.

PROFIBUS DP

The IEC 61158 standard specifies two types of cable (A and B) for the bus line which can be used for every transmission rate. Cable type A is recommended.

Cable type	A
Characteristic impedance	135 to 165 Ω at a measuring frequency of 3 to 20 MHz
Cable capacitance	< 30 pF/m
Wire cross-section	> 0.34 mm^2 (22 AWG)
Cable type	Twisted pairs
Loop resistance	≤110 Ω/km
Signal damping	Max. 9 dB over the entire length of the cable cross-section
Shield	Copper braided shielding or braided shielding with foil shield. When grounding the cable shield, observe the grounding concept of the plant.

For further information on planning and installing PROFIBUS networks see:

Operating Instructions "PROFIBUS DP/PA: Guidelines for planning and commissioning" (BA00034S)

Modbus RS485

The EIA/TIA-485 standard specifies two types of cable (A and B) for the bus line which can be used for every transmission rate. Cable type A is recommended.

Cable type	A
Characteristic impedance	135 to 165 Ω at a measuring frequency of 3 to 20 MHz
Cable capacitance	< 30 pF/m
Wire cross-section	> 0.34 mm^2 (22 AWG)
Cable type	Twisted pairs
Loop resistance	≤110 Ω/km
Signal damping	Max. 9 dB over the entire length of the cable cross-section
Shield	Copper braided shielding or braided shielding with foil shield. When grounding the cable shield, observe the grounding concept of the plant.

EtherNet/IP

The standard ANSI/TIA/EIA-568-B.2 Annex specifies CAT 5 as the minimum category for a cable used for EtherNet/IP. CAT 5e and CAT 6 are recommended.

For more information on planning and installing EtherNet/IP networks, please refer to the "Media Planning and Installation Manual. EtherNet/IP" of ODVA Organization

Connecting cable for remote version

Electrode cable

Standard cable	3 ×0.38 mm² (20 AWG) with common, braided copper shield (⌀ ~9.5 mm (0.37 in)) and individual shielded cores
Cable for empty pipe detection (EPD)	4 ×0.38 mm² (20 AWG) with common, braided copper shield (⌀ ~9.5 mm (0.37 in)) and individual shielded cores
Conductor resistance	≤50 Ω/km (0.015 Ω/ft)
Capacitance: core/shield	≤420 pF/m (128 pF/ft)
Continuous operating temperature	–20 to +80 °C (–4 to +176 °F)

Coil current cable

Standard cable	3 ×0.75 mm² (18 AWG) with common, braided copper shield (⌀ ~9 mm (0.35 in))
Conductor resistance	≤37 Ω/km (0.011 Ω/ft)
Capacitance: core/core, shield grounded	≤120 pF/m (37 pF/ft)
Continuous operating temperature	–20 to +80 °C (–4 to +176 °F)
Test voltage for cable insulation	≤ AC 1433 V rms 50/60 Hz or ≥ DC 2026 V

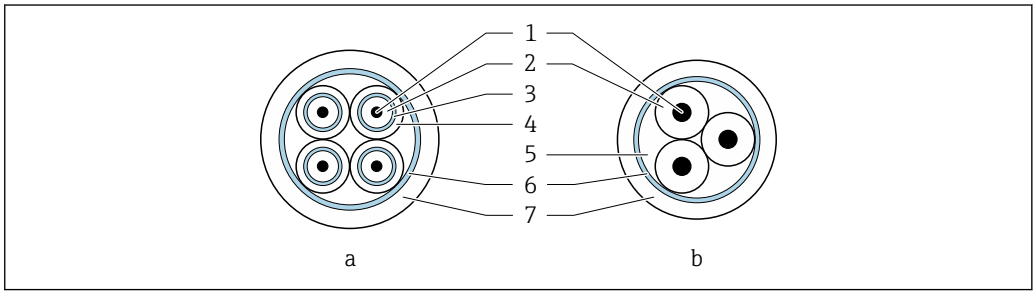

A0029151

13 Cable cross-section

a Electrode cable
b Coil current cable
1 Core
2 Core insulation
3 Core shield
4 Core jacket
5 Core reinforcement
6 Cable shield
7 Outer jacket

A connecting cable can be ordered from Endress+Hauser for IP68:
- Pre-terminated cables that are already connected to the sensor
- Pre-terminated cables, where the cables are connected by the customer onsite (incl. tools for sealing the connection compartment)

Armored connecting cable

Armored connecting cables with an additional, reinforcing metal braid should be used:
- When laying the cable directly in the ground
- Where there is a risk of damage from rodents
- Use in accordance with IP68 protection

Armored connecting cables with an additional, reinforcing metal braid can be ordered from Endress+Hauser → 104.

Operation in environments with strong electrical interference

The measuring system meets the general safety requirements (→ 103) and EMC specifications (→ 48).

Grounding is by means of the ground terminal provided for the purpose inside the connection housing. The stripped and twisted lengths of cable shield to the ground terminal must be as short as possible.

Overvoltage protection

Mains voltage fluctuations	→ 23
Overvoltage category	Overvoltage category II
Short-term, temporary overvoltage	Between cable and ground up to 1200 V, for max. 5 s
Long-term, temporary overvoltage	Between cable and ground up to 500 V

Performance characteristics

Reference operating conditions

- Error limits following DIN EN 29104, in future ISO 20456
- Water, typically +15 to +45 °C (+59 to +113 °F); 0.5 to 7 bar (73 to 101 psi)
- Data as indicated in the calibration protocol
- Accuracy based on accredited calibration rigs according to ISO 17025

Maximum measured error

Error limits under reference operating conditions

Volume flow

- ±0.5 % o.r. ± 1 mm/s (0.04 in/s)
- Optional: ±0.2 % o.r. ± 2 mm/s (0.08 in/s)

Fluctuations in the supply voltage do not have any effect within the specified range.

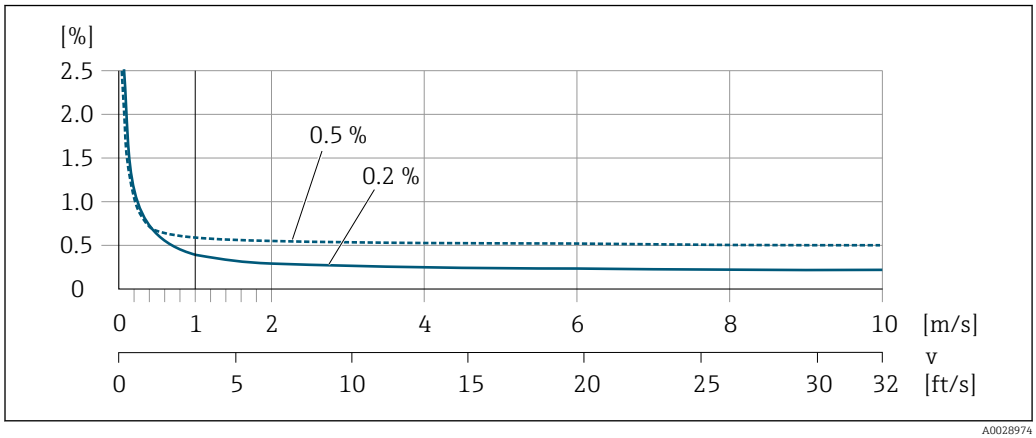

14 *Maximum measured error in % o.r.*

Flat Spec

For Flat Spec in the range $v_{0.5}$ ($v_{0.2}$) up to v_{max} the measured error is constant.

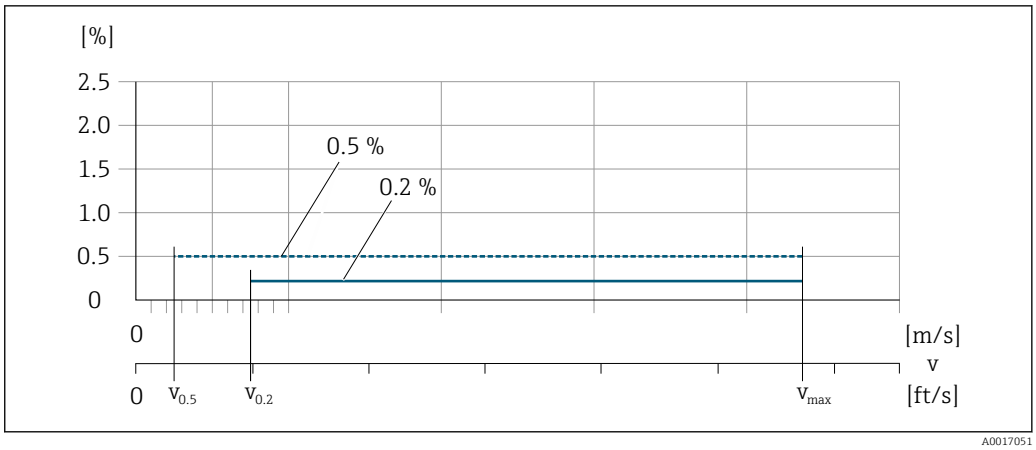

15 *Flat Spec in % o.r.*

Flat Spec flow values 0.5 %

Nominal diameter		$v_{0.5}$		v_{max}	
[mm]	[in]	[m/s]	[ft/s]	[m/s]	[ft/s]
25 to 600	1 to 24	0.5	1.64	10	32
50 to 300 [1)]	2 to 12	0.25	0.82	5	16

1) Order code for "Design", option C

Flat Spec flow values 0.2 %

Nominal diameter		$v_{0.2}$		v_{max}	
[mm]	[in]	[m/s]	[ft/s]	[m/s]	[ft/s]
25 to 600	1 to 24	1.5	4.92	10	32
50 to 300 [1)]	2 to 12	0.6	1.97	4	13

1) Order code for "Design", option C

Electrical conductivity

The values apply for:
- Measurements at a reference temperature of 25 °C (77 °F)
  At different temperatures, attention must be paid to the temperature coefficient of the medium (typically 2.1 %/K)
- Device version: compact version - transmitter and sensor form a mechanical unit
- Devices installed in a metal pipe or in a non-metal pipe with ground disks
- Devices whose potential equalization was performed according to the instructions in the associated Operating Instructions

Conductivity [µS/cm]	Measured error [%] o. r.
5 to 20	± 20%
20 to 20 000	± 10%
20 000 to 100 000	± 20%

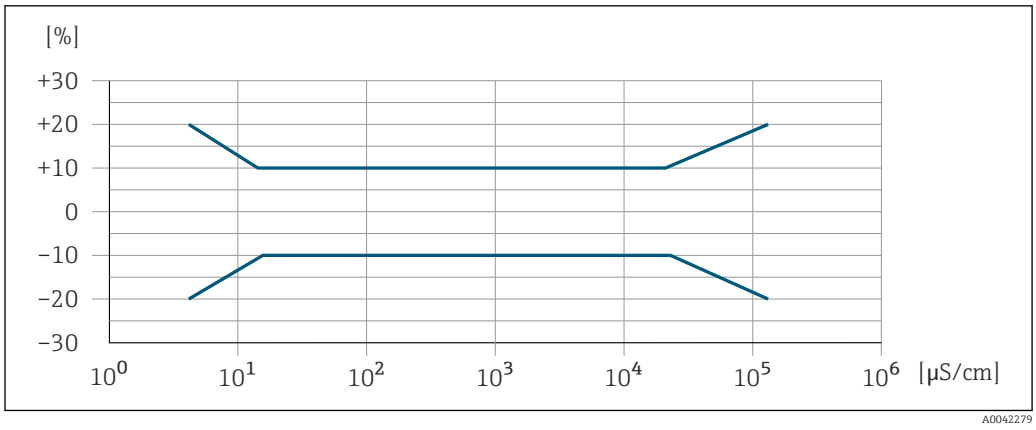

16 *Measured error*

Accuracy of outputs

The outputs have the following base accuracy specifications.

Current output

Accuracy	Max. ±5 µA

Pulse/frequency output

o.r. = of reading

Accuracy	Max. ±50 ppm o.r. (over the entire ambient temperature range)

Repeatability

o.r. = of reading

Volume flow
max. ±0.1 % o.r. ± 0.5 mm/s (0.02 in/s)

Electrical conductivity
Max. ±5 % o.r.

Influence of ambient temperature

Current output

o.r. = of reading

Temperature coefficient	Max. ±0.005 % o.r./°C

Pulse/frequency output

Temperature coefficient	No additional effect. Included in accuracy.

Installation

Mounting location

- Do not install the device at the highest point of the pipe.
- Do not install the device upstream from a free pipe outlet in a down pipe.

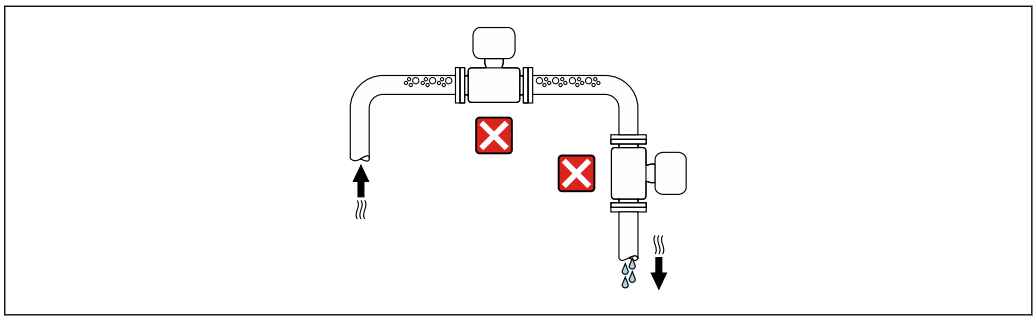

A0042131

The device should ideally be installed in an ascending pipe.

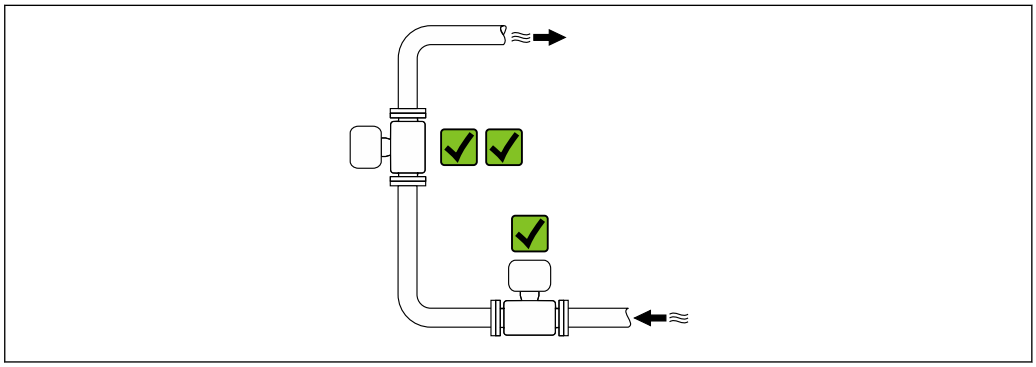

A0042317

Installation near valves

Install the device in the direction of flow upstream from the valve.

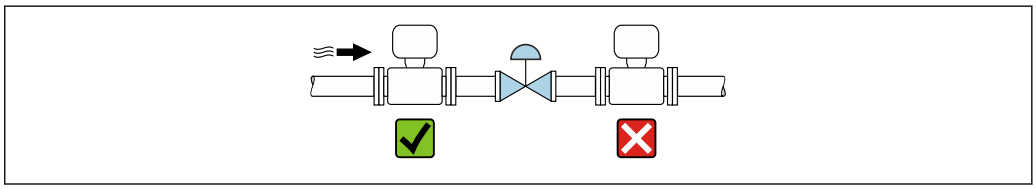

A0041091

Installation upstream from a down pipe

NOTICE

Negative pressure in the measuring pipe can damage the liner!

▶ If installing upstream of down pipes whose length h ≥ 5 m (16.4 ft): install a siphon with a vent valve downstream of the device.

This arrangement prevents the flow of liquid stopping in the pipe and air entrainment.

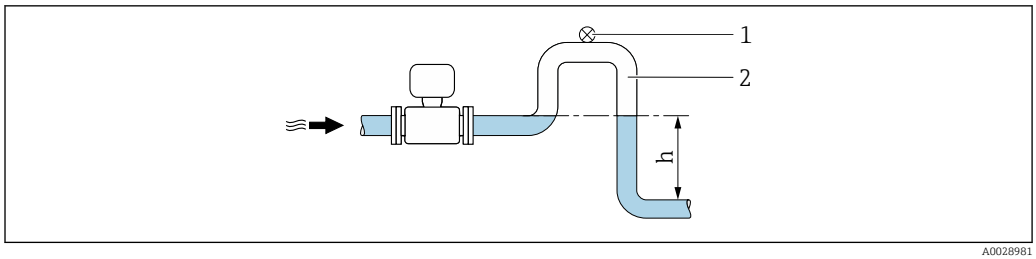

A0028981

1 Vent valve
2 Pipe siphon
h Length of down pipe

Installation with partially filled pipes

- Partially filled pipes with a gradient require a drain-type configuration.
- The installation of a cleaning valve is recommended.

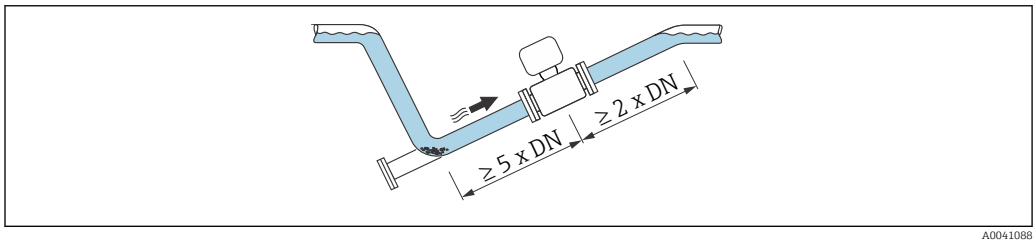

A0041088

No inlet and outlet runs for devices with the order code for "Design": Option C, H, I, J or K.

Installation near pumps

NOTICE

Negative pressure in the measuring pipe can damage the liner!

- ▶ In order to maintain the system pressure, install the device in the flow direction downstream from the pump.
- ▶ Install pulsation dampers if reciprocating, diaphragm or peristaltic pumps are used.

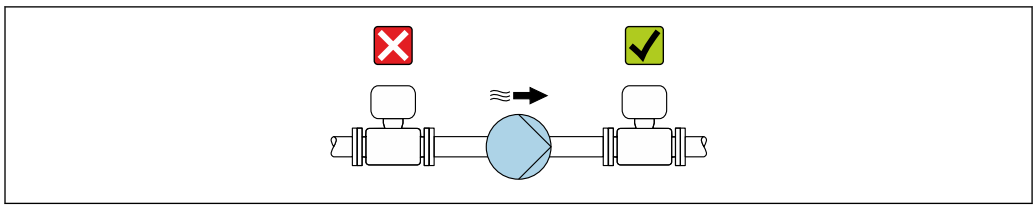

A0041083

- Information on the liner's resistance to partial vacuum → 52
- Information on the measuring system's resistance to vibration and shock → 47

Installation of very heavy devices

Support required for nominal diameters of DN ≥ 350 mm (14 in).

NOTICE

Damage to the device!

If incorrect support is provided, the sensor housing could buckle and the internal magnetic coils could be damaged.

- ▶ Only provide supports at the pipe flanges.

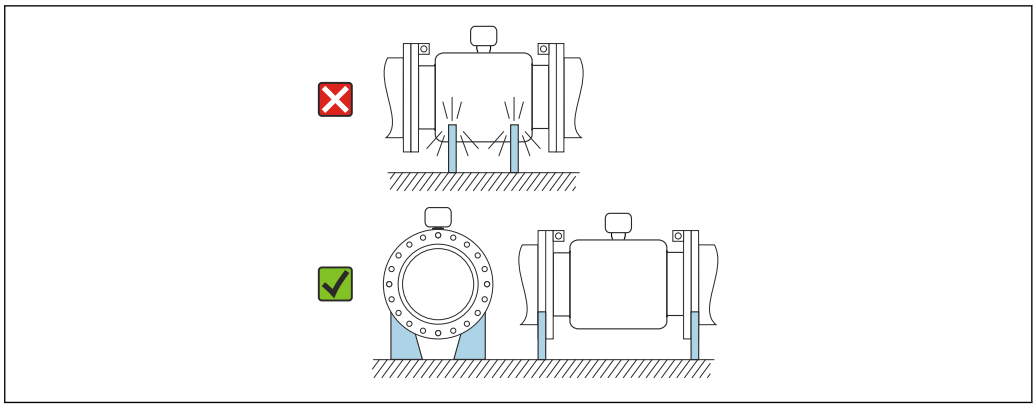

A0041087

Installation in event of pipe vibrations

A remote version is recommended in the event of strong pipe vibrations.

NOTICE

Pipe vibrations can damage the device!

- Do not expose the device to strong vibrations.
- Support the pipe and fix it in place.
- Support the device and fix it in place.
- Mount the sensor and transmitter separately.

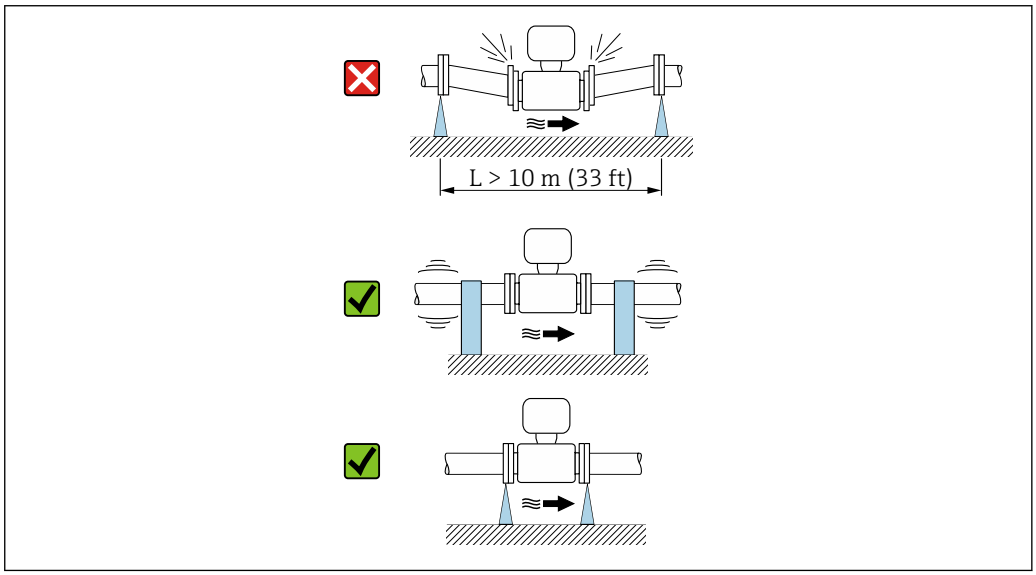

A0041092

Information on the measuring system's resistance to vibration and shock → 47

Orientation

The direction of the arrow on the sensor nameplate helps you to install the sensor according to the flow direction (direction of medium flow through the piping).

Orientation		Recommendation
Vertical orientation	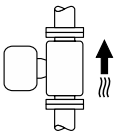 A0015591	✓✓
Horizontal orientation, transmitter at top	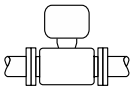 A0015589	✓✓ 1)
Horizontal orientation, transmitter at bottom	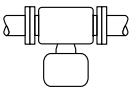 A0015590	✓✓ 2) 3) ✗ 4)
Horizontal orientation, transmitter at side	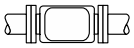 A0015592	✗

1) Applications with low process temperatures may decrease the ambient temperature. To maintain the minimum ambient temperature for the transmitter, this orientation is recommended.
2) Applications with high process temperatures may increase the ambient temperature. To maintain the maximum ambient temperature for the transmitter, this orientation is recommended.
3) To prevent the electronics module from overheating in the case of a sharp rise in temperature (e.g. CIP or SIP processes), install the device with the transmitter component pointing downwards.
4) With the empty pipe detection function switched on: empty pipe detection only works if the transmitter housing is pointing upwards.

Vertical

Optimum for self-emptying pipe systems and for use in conjunction with empty pipe detection.

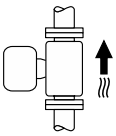

A0015591

Horizontal

- Ideally, the measuring electrode plane should be horizontal. This prevents brief insulation of the measuring electrodes by entrained air bubbles.
- Empty pipe detection only works if the transmitter housing is pointing upwards as otherwise there is no guarantee that the empty pipe detection function will actually respond to a partially filled or empty measuring tube.

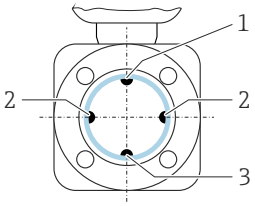

A0029344

1 EPD electrode for empty pipe detection
2 Measuring electrodes for signal detection
3 Reference electrode for potential equalization

Inlet and outlet runs

Installation with inlet and outlet runs

Installation is carried out with inlet and outlet runs.

Maintain straight, unimpeded inlet and outlet runs.

To avoid a vacuum and to maintain the specified level of measurement accuracy, if possible install the device upstream from assemblies that produce turbulence (e.g. valves, T-sections) and downstream from pumps.

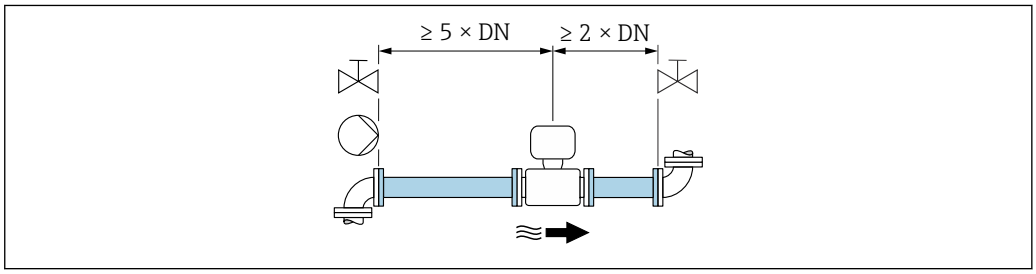

A0028997

Keep a sufficient distance to the next pipe elbow.

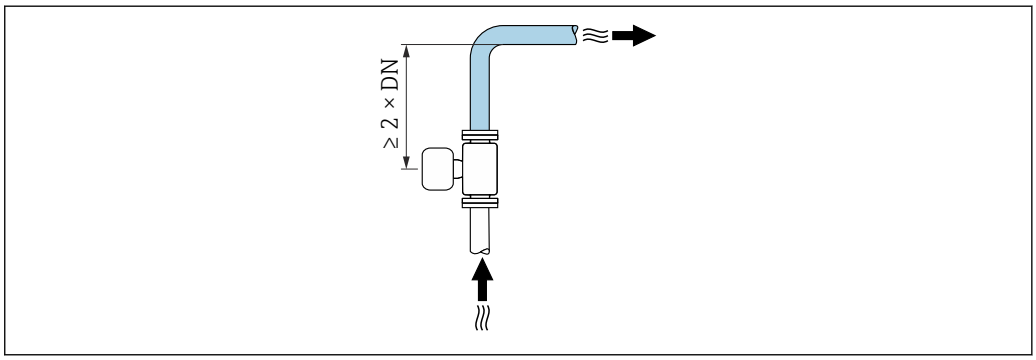

A0042132

Installation without inlet and outlet runs

Depending on the device design and installation location, the inlet and outlet runs can be reduced or omitted entirely.

Maximum measurement error
When the device is installed with the inlet and outlet runs described, a maximum measurement error of ±0.5 % of measured value ±1 mm/s (0.04 in/s) (optional: ±0.2 % of measured value ±2 mm/s (0.08 in/s)) can be ensured.

Devices and possible order options

Order code for "Design"		
Option	**Description**	**Design**
C	Fixed flange, constricted measuring tube, 0 x DN inlet/outlet runs	Constricted measuring tube [1]
H	Lap joint flange, 0 x DN inlet/outlet runs	0 x DN full-bore design [2]
I	Fixed flange, 0 x DN inlet/outlet runs	
J	Fixed flange, short installed length, 0 x DN inlet/outlet runs	
K	Fixed flange, long installed length, 0 x DN inlet/outlet runs	

1) "Constricted measuring tube" stands for a reduction of the internal diameter of the measuring tube. The reduced internal diameter causes a higher flow velocity inside the measuring tube.
2) "Full-bore" indicates a measuring tube cross-section corresponding to the nominal diameter without constriction. This means there is no pressure loss.

Installation before or after bends

Installation without inlet and outlet runs is possible.

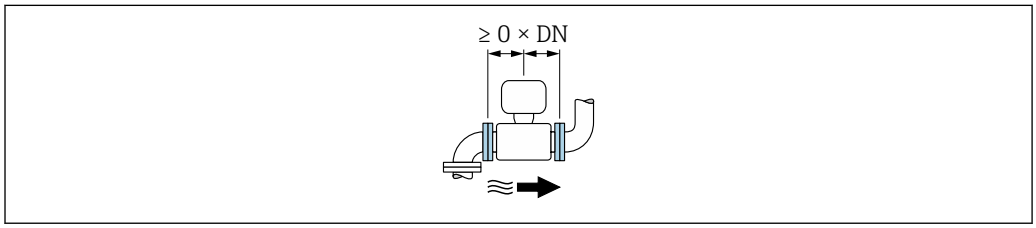

A0032859

Installation downstream of pumps

Installation without inlet and outlet runs is possible.

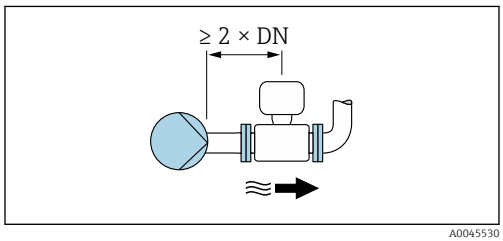

A0045530

An inlet run of ≥ 2 x DN is recommended.

Installation upstream of valves

Installation without inlet and outlet runs is possible.

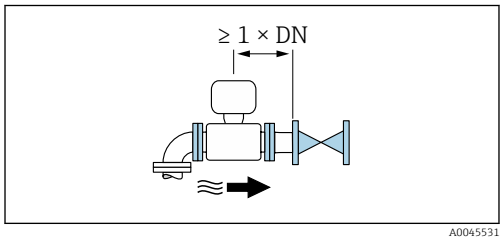

A0045531

An outlet run of ≥ 1 x DN is recommended.

Installation downstream of valves

The device can be installed without inlet and outlet runs if the valve is 100% open during operation.

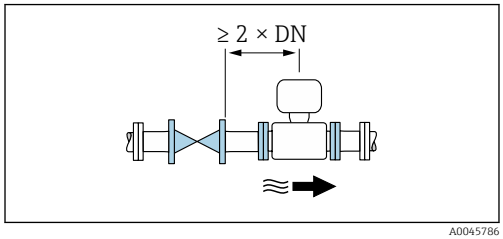

A0045786

An inlet run of ≥ 2 x DN is recommended if the valve is 100% open during operation.

Adapters

Suitable adapters to DIN EN 545 (double-flange reducers) can be used to install the sensor in larger-diameter pipes. The resulting increase in the flow velocity improves measurement accuracy for very slow-moving fluids.

The nomogram shown here can be used to calculate the pressure loss caused by reducers and expanders:

- Calculate the ratio of the diameters d/D.
- From the nomogram read off the pressure loss as a function of flow velocity (downstream from the reduction) and the d/D ratio.

The nomogram only applies to liquids with a viscosity similar to that of water.

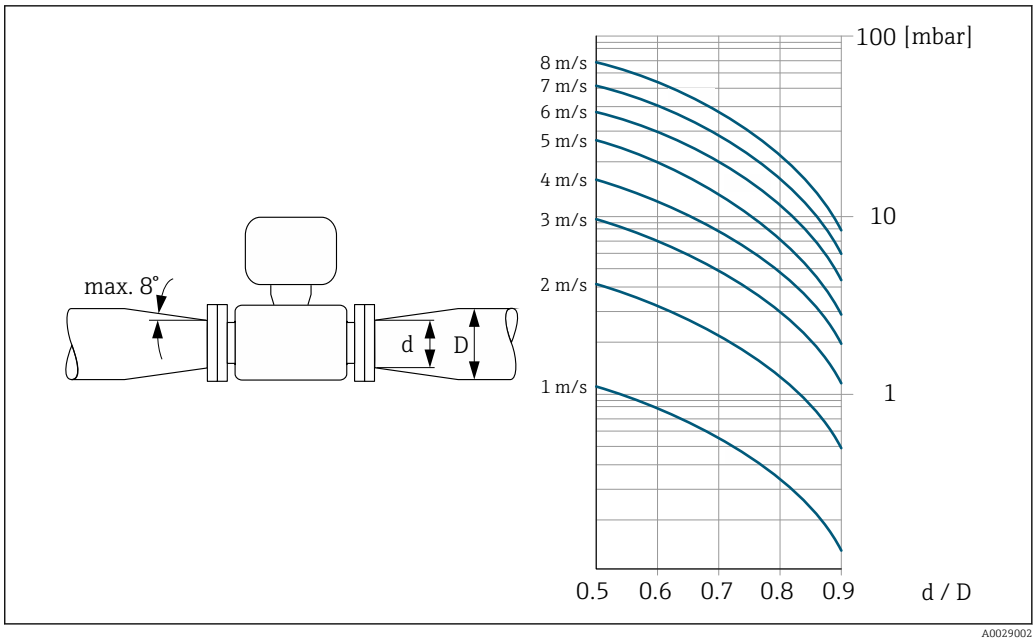

Length of connecting cable

To obtain correct measurement results, observe the permitted connecting cable length of L_{max}. This length is determined by the conductivity of the medium. If measuring liquids in general: 5 µS/cm

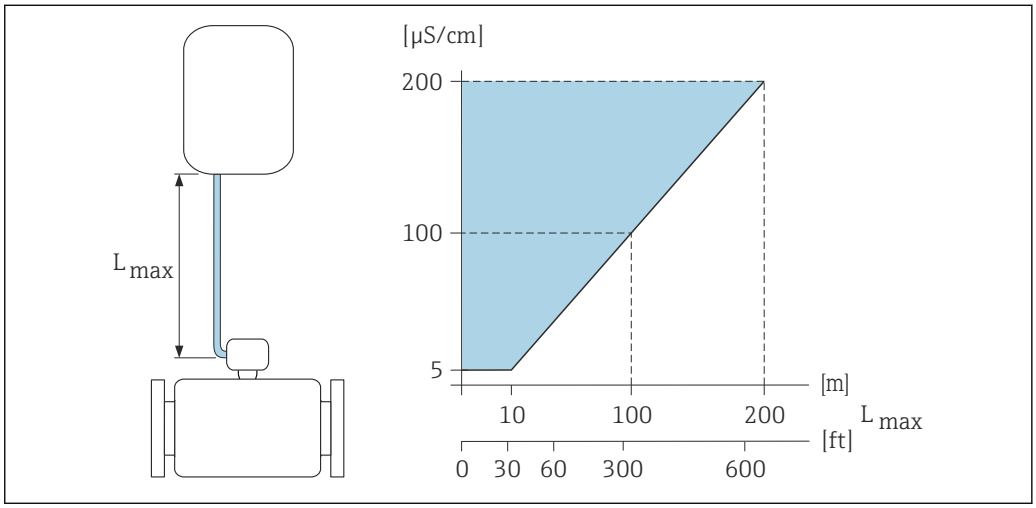

17 *Permitted length of connecting cable*

Colored area = permitted range
L_{max} = length of connecting cable in [m] ([ft])
[µS/cm] = medium conductivity

Special installation instructions

Display guard

To ensure that the optional display guard can be easily opened, maintain the following minimum head clearance: 350 mm (13.8 in)

Weather protection cover

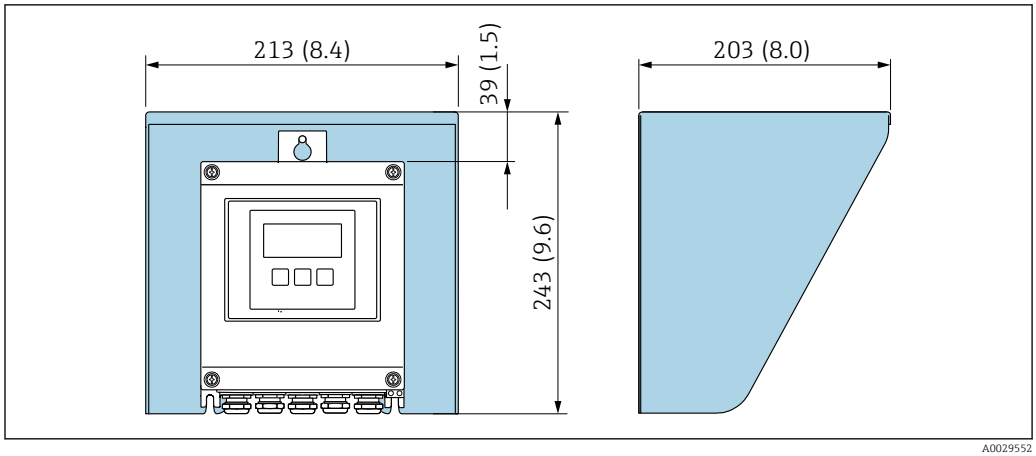

18 *Weather protection cover; engineering unit mm (in)*

Immersion in water

- Only the remote version of the device with IP68 protection, Type 6P is suitable for underwater use: order code for "Sensor option", options CB, CC, CD, CE and CQ.
- Pay attention to regional installation instructions.

NOTICE

If the maximum water depth and operating duration is exceeded, this can damage the device!

► Observe the maximum water depth and operating duration.

Order code for "Sensor option", options CB, CC

- For the operation of the device under water
- Operating duration at a maximum depth of:
  - 3 m (10 ft): permanent use
  - 10 m (30 ft): maximum 48 hours

Order code for "Sensor option", option CQ "IP68, Type 6P, factory-potted"

- For permanent operation of the device under rain or surface water
- Operation at a maximum depth of 3 m (10 ft)

Order code for "Sensor option", options CD, CE

- For the operation of the device under water and in saline water
- Operating duration at a maximum depth of:
  - 3 m (10 ft): permanent use
  - 10 m (30 ft): maximum 48 hours

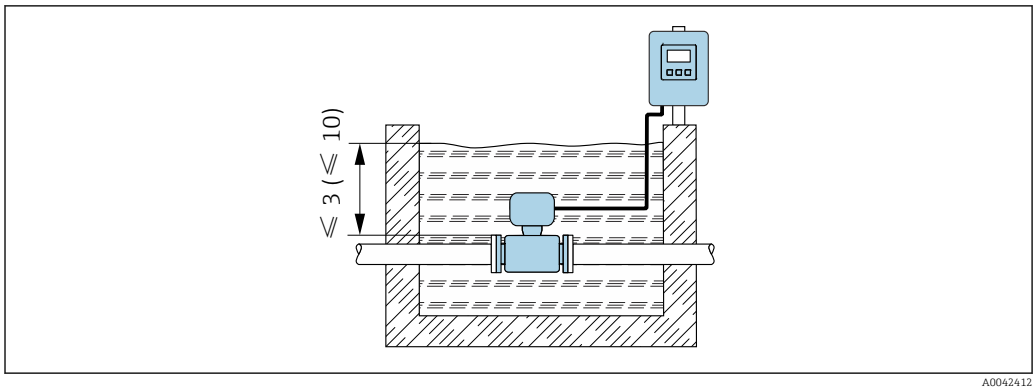

Use in buried applications

- Only the remote version of the device with IP68 protection is suitable for use in buried applications: order code for "Sensor option", options CD and CE.
- Pay attention to regional installation instructions.

Order code for "Sensor option", options CD, CE

For the use of the device in buried applications.

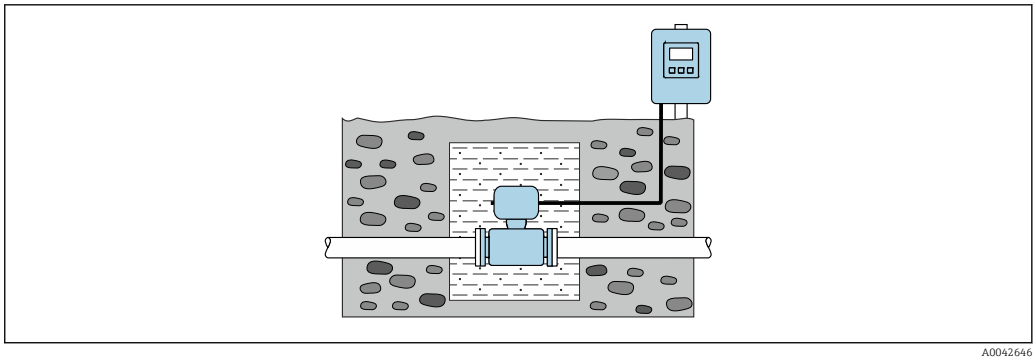

A0042646

Mounting the transmitter housing

Wall mounting

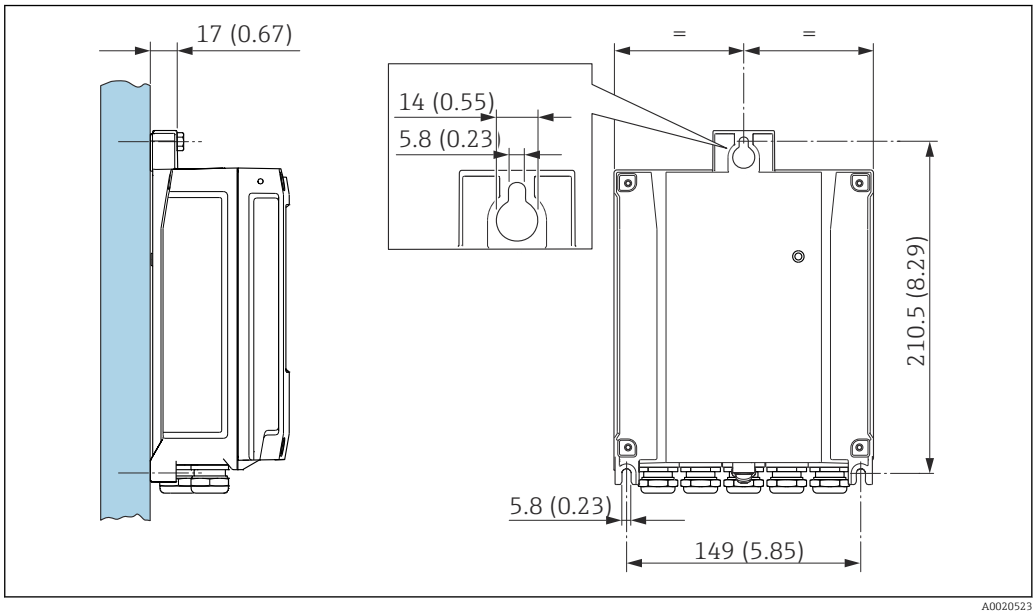

A0020523

19 *Engineering unit mm (in)*

Post mounting

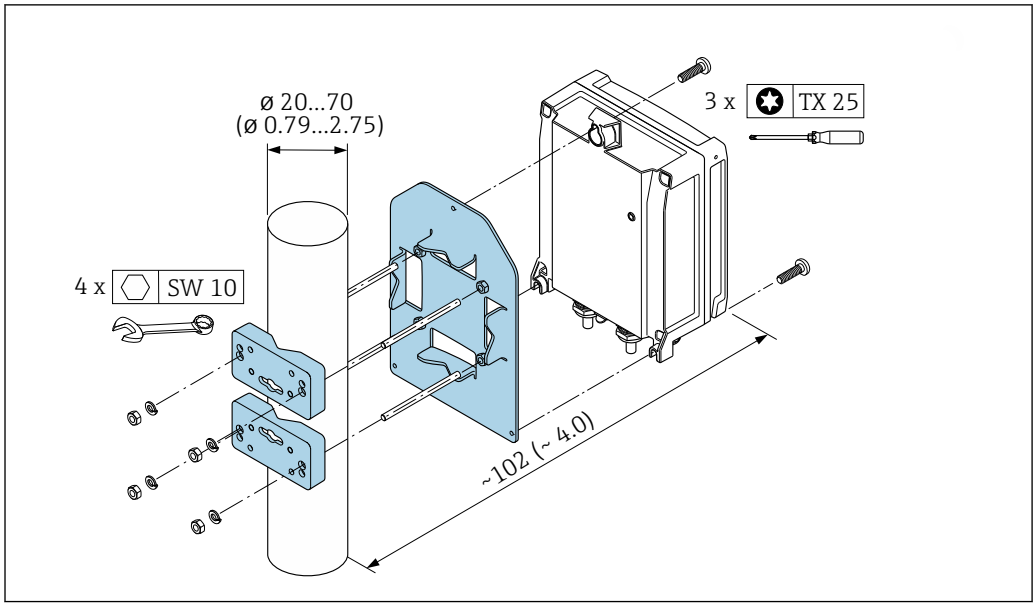

20 *Engineering unit mm (in)*

Environment

Ambient temperature range

Transmitter	−40 to +60 °C (−40 to +140 °F)
Local display	−20 to +60 °C (−4 to +140 °F), the legibility of the local display may be impaired at temperatures outside the temperature range.
Sensor	▪ Process connection material, carbon steel: −10 to +60 °C (+14 to +140 °F) ▪ Process connection material, stainless steel: −40 to +60 °C (−40 to +140 °F) If both the ambient and the medium temperatures are high, mount the sensor separately from the transmitter.
Liner	Do not exceed or fall below the permitted temperature range of the liner → 48.

If operating outdoors:
- Install the measuring device in a shady location.
- Avoid direct sunlight, particularly in warm climatic regions.
- Avoid direct exposure to weather conditions.
- If the compact version of the device is insulated at low temperatures, the insulation must also include the device neck.
- Protect the display against impact.
- Protect the display from abrasion, e.g. caused by sand in desert areas.

Display guard available as an accessory → 104.

Temperature tables

Observe the interdependencies between the permitted ambient and fluid temperatures when operating the device in hazardous areas.

For detailed information on the temperature tables, see the separate document entitled "Safety Instructions" (XA) for the device.

Storage temperature

The storage temperature corresponds to the operating temperature range of the transmitter and the sensor → 46.

- Protect the measuring device against direct sunlight during storage in order to avoid unacceptably high surface temperatures.
- Select a storage location where moisture cannot collect in the measuring device as fungus or bacteria infestation can damage the liner.
- If protection caps or protective covers are mounted these should never be removed before installing the measuring device.

Atmosphere

If a plastic transmitter housing is permanently exposed to certain steam and air mixtures, this can damage the housing.

In cases of doubt, please contact the Sales Center.

Degree of protection

Transmitter

- IP66/67, type 4X enclosure, suitable for pollution degree 4
- When the housing is open: IP20, type 1 enclosure, suitable for pollution degree 2
- Display module: IP20, type 1 enclosure, suitable for pollution degree 2

Sensor

Compact and remote version

IP66/67, type 4X enclosure, suitable for pollution degree 4

Optionally available for compact and remote version:

Order code for "Sensor option", option CA, C3
- IP66/67, type 4X enclosure
- Fully welded, with protective coating as per EN ISO 12944 C5-M
- For the operation of the device in corrosive environments

Optionally available for remote version:

Order code for "Sensor option", option CB, CC
- IP68, type 6P enclosure
- Fully welded, with protective coating as per EN ISO 12944 C5-M/Im1 and EN 60529
- For the operation of the device under water
- Operating duration at a maximum depth of:
  - 3 m (10 ft): permanent use
  - 10 m (30 ft): maximum 48 hours

Order code for "Sensor option", option CQ
- IP68, type 6P, factory encapsulation
- Sensor with aluminum half-shell housing
- For permanent use of device under rain or surface water
- Use at a maximum water depth of 3 m (10 ft)

Order code for "Sensor option", option CD, CE
- IP68, type 6P enclosure
- Fully welded, with protective coating as per EN ISO 12944 Im2/Im3 and EN 60529
- For the operation of the device in buried applications
- For the operation of the device under water and in saline water
- Operating duration at a maximum depth of:
  - 3 m (10 ft): permanent use
  - 10 m (30 ft): maximum 48 hours

Vibration- and shock-resistance

Sinusoidal vibration according to IEC 60068-2-6

Compact version; order code for "Housing", option A "Compact, aluminum, coated"
- 2 to 8.4 Hz, 3.5 mm peak
- 8.4 to 2 000 Hz, 1 g peak

Compact version; order code for "Housing", option M "Compact, polycarbonate"
- 2 to 8.4 Hz, 7.5 mm peak
- 8.4 to 2 000 Hz, 2 g peak

Remote version; order code for "Housing", option N "Remote, polycarbonate" and option P "Remote, aluminum, coated"
- 2 to 8.4 Hz, 7.5 mm peak
- 8.4 to 2 000 Hz, 2 g peak

Vibration broad-band random, according to IEC 60068-2-64

Compact version; order code for "Housing", option A "Compact, aluminum, coated"
- 10 to 200 Hz, 0.003 g^2/Hz
- 200 to 2 000 Hz, 0.001 g^2/Hz
- Total: 1.54 g rms

Compact version; order code for "Housing", option M "Compact, polycarbonate"
- 10 to 200 Hz, 0.01 g^2/Hz
- 200 to 2 000 Hz, 0.003 g^2/Hz
- Total: 2.70 g rms

Remote version; order code for "Housing", option N "Remote, polycarbonate" and option P "Remote, aluminum, coated"
- 10 to 200 Hz, 0.01 g^2/Hz
- 200 to 2 000 Hz, 0.003 g^2/Hz
- Total: 2.70 g rms

Shock half-sine, according to IEC 60068-2-27

- Compact version; order code for "Housing", option A "Compact, aluminum, coated"
  6 ms 30 g
- Compact version; order code for "Housing", option M "Compact, polycarbonate"
  6 ms 50 g
- Remote version; order code for "Housing", option N "Remote, polycarbonate" and option P "Remote, aluminum, coated"
  6 ms 50 g

Rough handling shocks according to IEC 60068-2-31

Mechanical load

- Protect the transmitter housing against mechanical effects, such as shock or impact; the use of the remote version is sometimes preferable.
- Never use the transmitter housing as a ladder or climbing aid.

Electromagnetic compatibility (EMC)

- As per IEC/EN 61326 and NAMUR Recommendation 21 (NE 21)
- As per IEC/EN 61000-6-2 and IEC/EN 61000-6-4
- Complies with emission limits for industry as per EN 55011 (Class A)
- Device version with PROFIBUS DP: Complies with emission limits for industry as per EN 50170 Volume 2, IEC 61784

The following applies for PROFIBUS DP: If baud rates > 1.5 MBaud, an EMC cable entry must be used and the cable shield must continue as far as the terminal wherever possible.

Details are provided in the Declaration of Conformity.

This unit is not intended for use in residential environments and cannot guarantee adequate protection of the radio reception in such environments.

Process

Medium temperature range

- 0 to +80 °C (+32 to +176 °F) for hard rubber, DN 50 to 3000 (2 to 120")
- −20 to +50 °C (−4 to +122 °F) for polyurethane, DN 25 to 1200 (1 to 48")
- −20 to +90 °C (−4 to +194 °F) for PTFE, DN 25 to 300 (1 to 12")

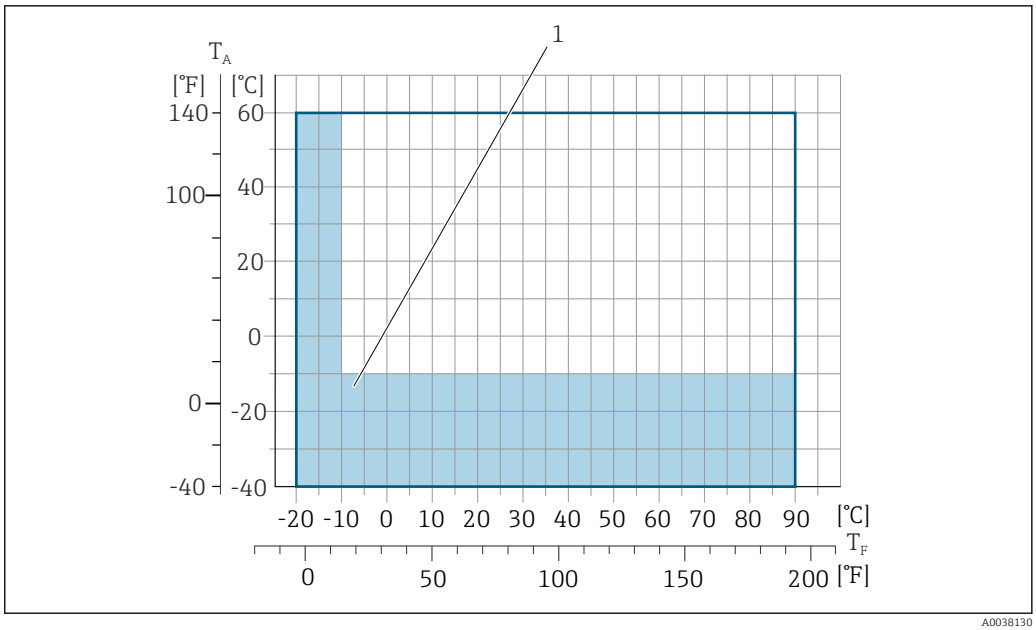

T_A *Ambient temperature*
T_F *Medium temperature*
1 *Colored area: The ambient temperature range of −10 to −40 °C (+14 to −40 °F) and the medium temperature range of −10 to −20 °C (+14 to −4 °F) only apply for stainless flanges*

The permitted fluid temperature in custody transfer is 0 to +50 °C (+32 to +122 °F).

Conductivity

≥5 µS/cm for liquids in general.

- Note that in the case of the remote version, the requisite minimum conductivity additionally depends on the length of the connecting cable → 43.
- Maximum measured error for electrical conductivity → 35.

Pressure/temperature ratings

The following pressure/temperature diagrams apply to all pressure-bearing parts of the device and not just the process connection. The diagrams show the maximum permissible medium pressure depending on the specific medium temperature.

Process connection: fixed flange according to EN 1092-1 (DIN 2501)

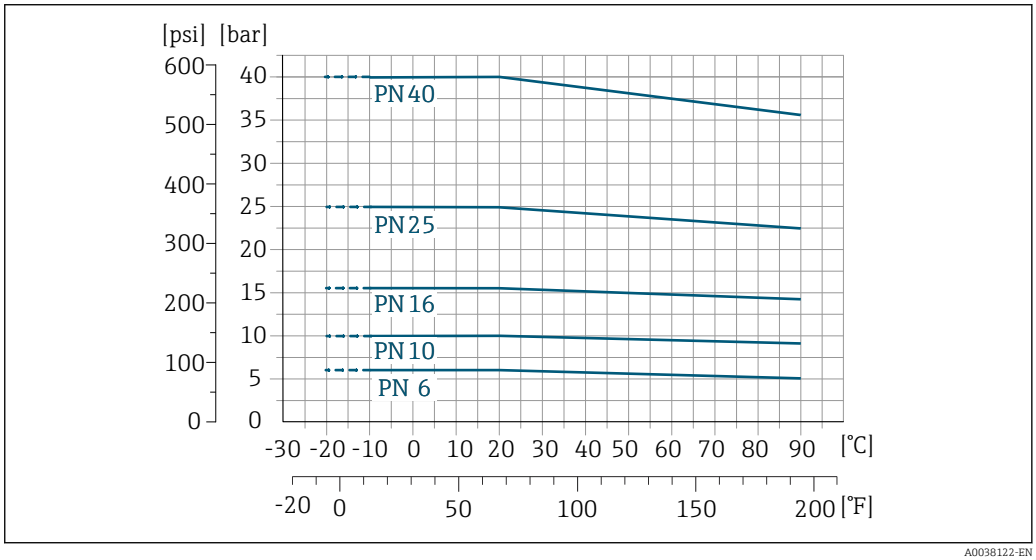

21 *Process connection material: stainless steel (−20 °C (−4 °F)); carbon steel (−10 °C (14 °F))*

Process connection: fixed flange according to ASME B16.5

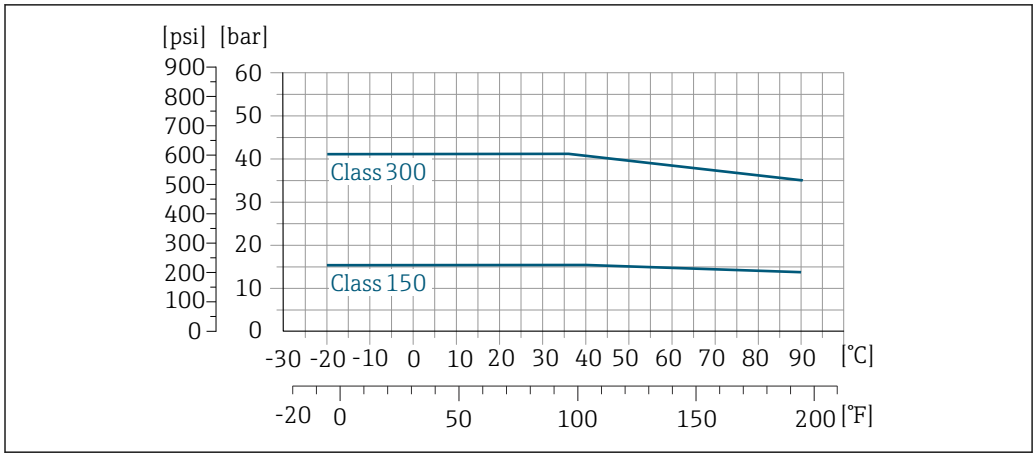

22 *Process connection material: stainless steel*

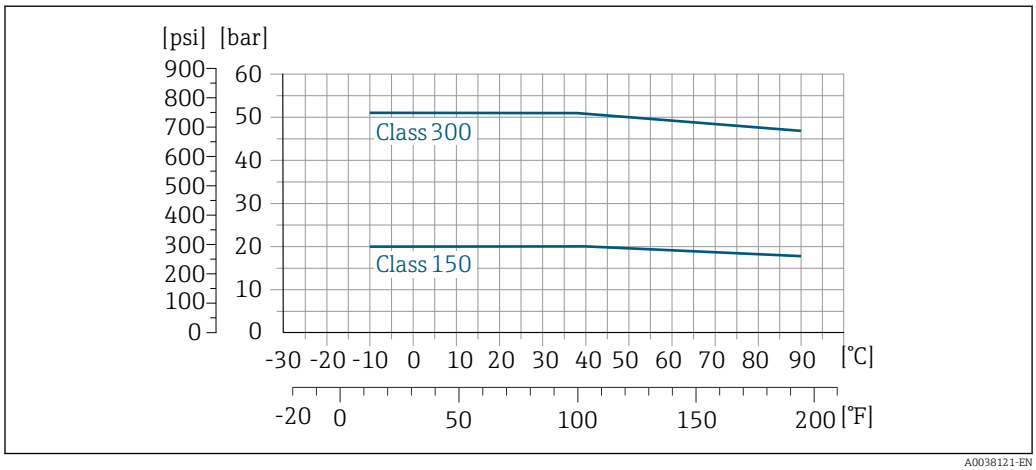

23 *Process connection material: carbon steel*

Process connection: fixed flange according to JIS B2220

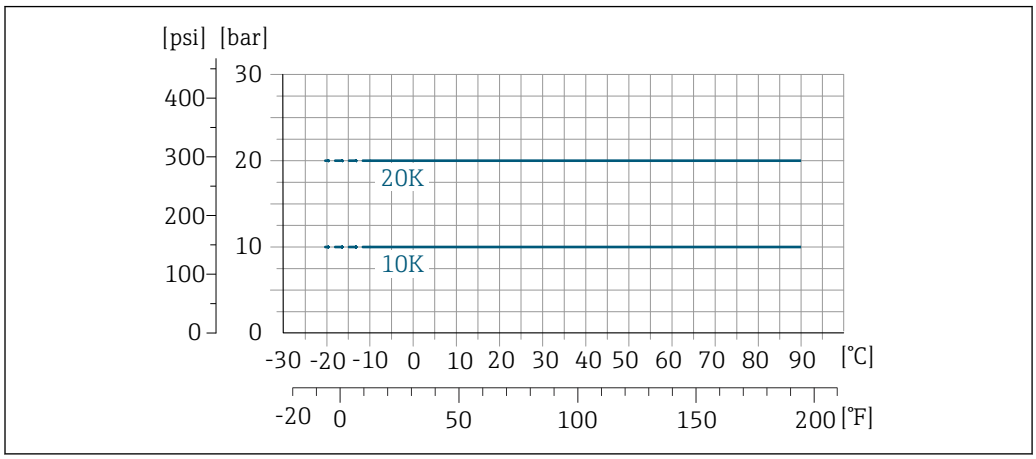

24 *Process connection material: stainless steel (−20 °C (−4 °F)); carbon steel (−10 °C (14 °F))*

Process connection: fixed flange according to AWWA C207

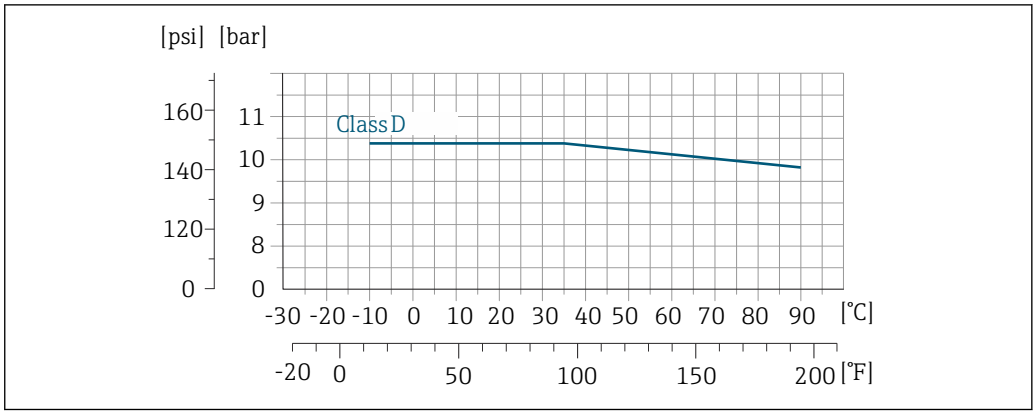

25 *Process connection material: carbon steel*

Process connection: fixed flange according to AS 2129

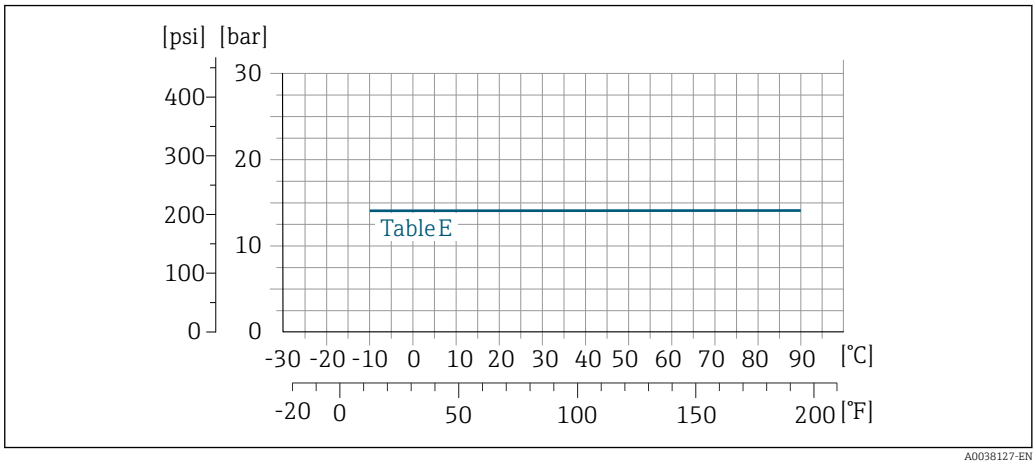

26 *Process connection material: carbon steel*

Process connection: fixed flange according to AS 4087

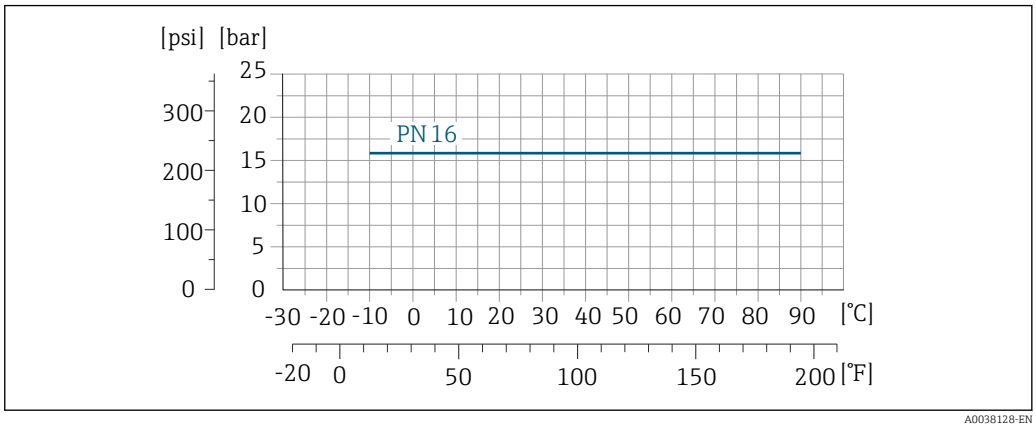

27 *Process connection material: carbon steel*

Process connection: lap joint flange/lap joint flange, stamped plate according to EN 1092-1 (DIN 2501) and ASME B16.5; DN 25 to 300 (1 to 12")

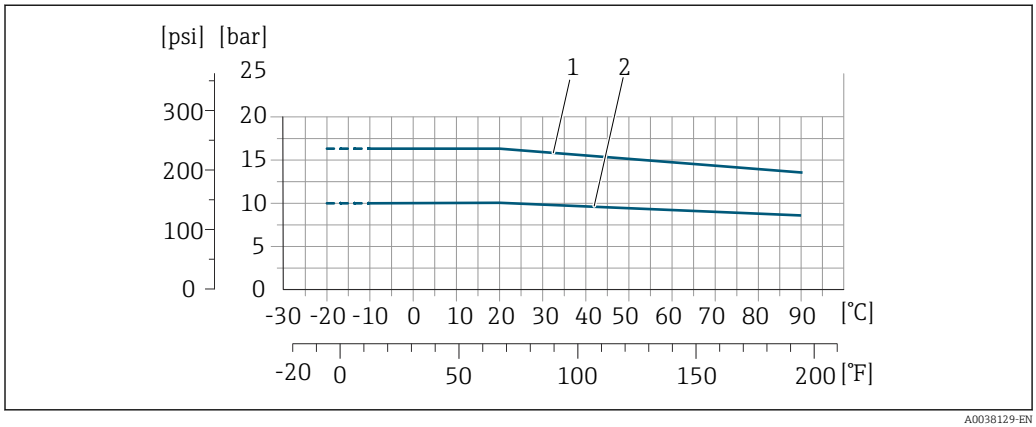

28 *Process connection material: stainless steel (−20 °C (−4 °F)); carbon steel (−10 °C (14 °F))*

1 Lap joint flange PN16/ Class150
2 Lap joint flange, stamped plate PN10, lap joint flange PN10

Pressure tightness

Liner: hard rubber

Nominal diameter		Limit values for absolute pressure in [mbar] ([psi]) for medium temperatures:		
[mm]	[in]	+25 °C (+77 °F)	+50 °C (+122 °F)	+80 °C (+176 °F)
50 … 3000	2 … 120	0 (0)	0 (0)	0 (0)

Liner: polyurethane

Nominal diameter		Limit values for absolute pressure in [mbar] ([psi]) for medium temperatures:	
[mm]	[in]	+25 °C (+77 °F)	+50 °C (+122 °F)
25 … 1200	1 … 48	0 (0)	0 (0)

Liner: PTFE

Nominal diameter		Limit values for absolute pressure in [mbar] ([psi]) for medium temperatures:	
[mm]	[in]	+25 °C (+77 °F)	+90 °C (+194 °F)
25	1	0 (0)	0 (0)
40	2	0 (0)	0 (0)
50	2	0 (0)	0 (0)
65	2 ½	0 (0)	40 (0.58)
80	3	0 (0)	40 (0.58)
100	4	0 (0)	135 (2.0)
125	5	135 (2.0)	240 (3.5)
150	6	135 (2.0)	240 (3.5)
200	8	200 (2.9)	290 (4.2)
250	10	330 (4.8)	400 (5.8)
300	12	400 (5.8)	500 (7.3)

Flow limit

The diameter of the pipe and the flow rate determine the nominal diameter of the sensor. The optimum velocity of flow is between 2 to 3 m/s (6.56 to 9.84 ft/s). Also match the velocity of flow (v) to the physical properties of the medium:

- v < 2 m/s (6.56 ft/s): for abrasive media (e.g. potter's clay, lime milk, ore slurry)
- v > 2 m/s (6.56 ft/s): for media producing buildup (e.g. wastewater sludge)

A necessary increase in the flow velocity can be achieved by reducing the sensor nominal diameter.

For an overview of the full scale values for the measuring range, see the "Measuring range" section → 8

For custody transfer, the applicable approval determines the permitted measuring range.

Pressure loss

- No pressure loss occurs if the sensor is installed in a pipe with the same nominal diameter.
- Pressure losses for configurations incorporating adapters according to DIN EN 545 → 42

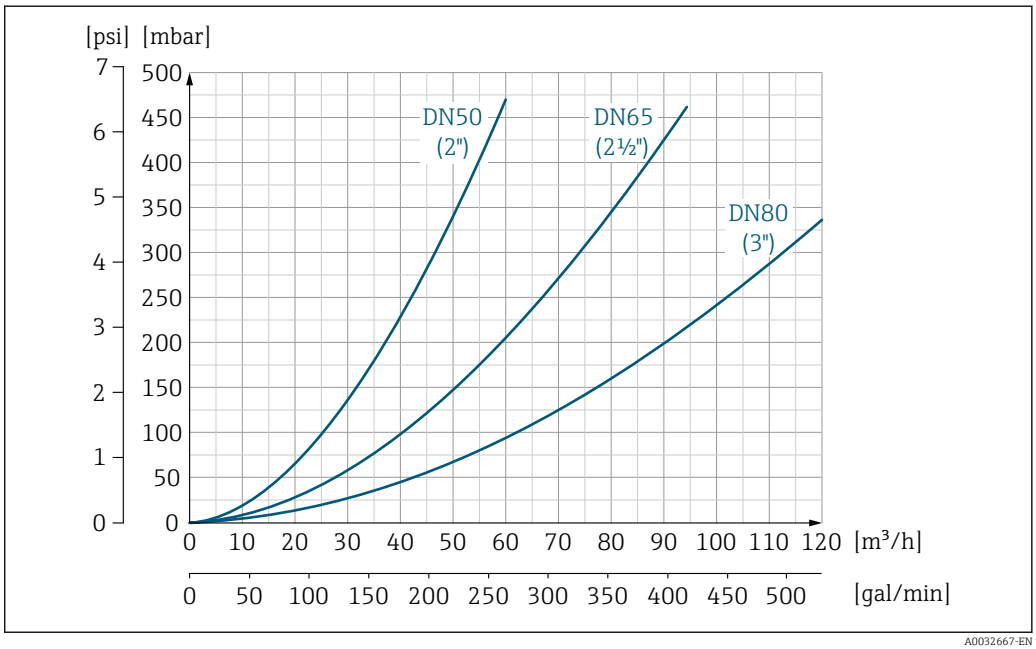

29 *Pressure loss DN 50 to 80 (2 to 3") for order code for "Design", option C "Fixed flange, constricted measuring tube", 0 x DN inlet/outlet runs"*

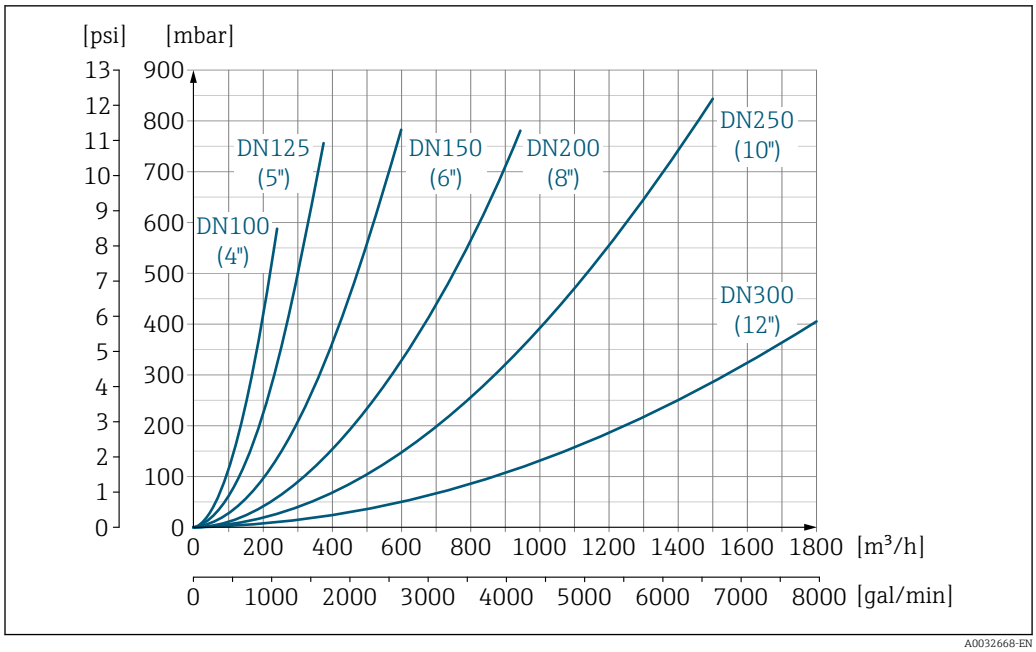

30 *Pressure loss DN 100 to 300 (4 to 12") for order code for "Design", option C "Fixed flange, constricted measuring tube", 0 x DN inlet/outlet runs"*

System pressure

Installation near pumps → 38

Vibrations

Installation in event of pipe vibrations → 39

Custody transfer

The measuring device is optionally tested in accordance with OIML R49 and has an EU type-examination certificate according to Measuring Instruments Directive 2014/32/EU for service subject to legal metrological control ("custody transfer") for cold water (Annex III).

The permitted medium temperature in these applications is 0 to +50 °C (+32 to +122 °F).

The device is used with a legally controlled totalizer display on the local display and optionally with outputs subject to legal metrological control.

Measuring devices subject to legal metrological control totalize in both directions, i.e. all the outputs consider flow components in the positive (forward) and negative (reverse) flow direction.

Generally a measuring device subject to legal metrological control is secured against tampering by seals on the transmitter or sensor. These seals may normally only be opened by a representative of the competent authority for legal metrology controls.

After putting the device into circulation or after sealing the device, operation is only possible to a limited extent.

Detailed ordering information is available from your local Endress+Hauser sales center for national approvals (outside Europe) as cold water meters based on OIML R49.

Mechanical construction

Dimensions in SI units

Compact version

Order code for "Housing", option A "Compact, aluminum, coated" or option M "Compact, polycarbonate"

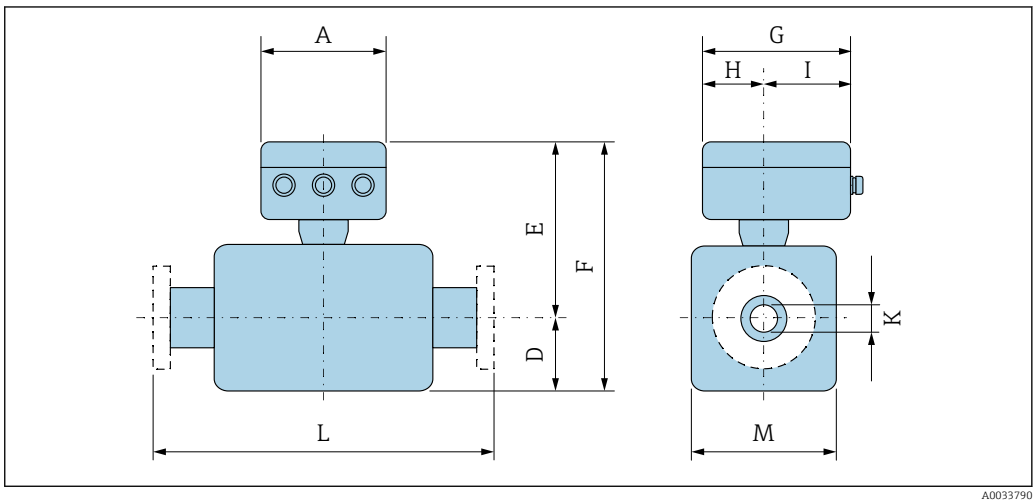

A0033790

A [mm]	G [1] [mm]	H [mm]	I [1] [mm]
167	193	90	103

1) Depending on the cable gland used: values up to + 30 mm

DN 25 to 300 mm (1 to 12 in): Sensor with aluminum half-shell housing

DN		Order code for "Design"								K	L
		Options D, E, H, I				Option C					
		D [1]	E [1]	F [1]	M [1]	D [1]	E [1]	F [1]	M [1]		
[mm]	[in]	[mm]	[mm]	[mm]	[mm]	[mm]	[mm]	[mm]	[mm]	[mm]	[mm]
25	1	84	201	285	120	–	–	–	–	[2]	200
32	–	84	201	285	120	–	–	–	–	[2]	200
40	1 ½	84	201	285	120	–	–	–	–	[2]	200
50	2	84	201	285	120	84	201	285	120	[2]	200
65	–	109	226	335	180	84	201	285	120	[2]	200
80	3	109	226	335	180	84	201	285	120	[2]	200
100	4	109	226	335	180	109	226	335	180	[2]	250
125	–	150	266	416	260	109	226	335	180	[2]	250
150	6	150	266	416	260	109	226	335	180	[2]	300
200	8	180	291	471	324	150	266	416	260	[2]	350
250	10	205	316	521	400	150	266	416	260	[2]	450
300	12	230	341	571	460	180	291	471	324	[2]	500

1) The dimensions are reference values. They may vary depending on the pressure rating, design and order option.
2) Depends on the liner → 🖹 91

DN 350 to 400 mm (14 to 16 in)

DN		Order code for "Design" Options E, I				K	L
		D [1]	E [1]	F [1]	M [1]		
[mm]	[in]	[mm]	[mm]	[mm]	[mm]	[mm]	[mm]
350	14	282	379	679	564	[2]	550
375	15	308	423	731	616	[2]	600
400	16	308	423	731	616	[2]	600

1) The dimensions are reference values. They may vary depending on the pressure rating, design and order option.
2) Depends on the liner → 🖹 91

DN 450 to 900 mm (18 to 36 in)

DN		Order code for "Design"								K	L	
		Options F, J				Options G, K						
		D [1]	E [1]	F [1]	M [1]	D [1]	E [1]	F [1]	M [1]			
[mm]	[in]	[mm]	[mm]	[mm]	[mm]	[mm]	[mm]	[mm]	[mm]	[mm]	[mm]	
450	18	290	405	695	580	333	448	781	666	[2]	600 [3]	650 [4]
500	20	315	430	745	630	359	474	833	717	[2]	600 [3]	650 [4]
600	24	365	480	845	730	411	526	937	821	[2]	600 [3]	780 [4]
700	28	426	541	967	851	512	627	1139	1024	[2]	700 [3]	910 [4]
750	30	463	578	1041	926	512	627	1139	1024	[2]	750 [3]	975 [4]

DN		Order code for "Design"								K	L	
		Options F, J				Options G, K						
		D [1]	E [1]	F [1]	M [1]	D [1]	E [1]	F [1]	M [1]			
[mm]	[in]	[mm]	[mm]	[mm]	[mm]	[mm]	[mm]	[mm]	[mm]	[mm]	[mm]	
800	32	482	597	1079	964	534	649	1183	1065	[2]	800 [3]	1040 [4]
900	36	532	647	1179	1064	610	725	1335	1218	[2]	900 [3]	1170 [4]

1) The dimensions are reference values. They may vary depending on the pressure rating, design and order option.
2) Depends on the liner → 91
3) Order code for "Design", option F "Fixed flange, short installed length" and option J "Fixed flange, short installed length, 0 x DN inlet/outlet runs"
4) Order code for "Design", option G "Fixed flange, long installed length" and option K "Fixed flange, long installed length 0 x DN inlet/outlet runs"

DN 1000 to 2000 mm (40 to 78 in)

DN		Order code for "Design" Options F, G, J, K				K	L	
		D [1]	E [1]	F [1]	M [1]			
[mm]	[in]	[mm]	[mm]	[mm]	[mm]	[mm]	[mm]	
1000	40	582	697	1279	1164	[2]	1000 [3]	1300 [4]
–	42	618	733	1351	1236	[2]	1050 [3]	1365 [4]
1200	48	696	811	1507	1392	[2]	1200 [3]	1560 [4]
–	54	809	924	1733	1617	[2]	1350 [3]	1755 [4]
1400	–	809	924	1733	1617	[2]	1400 [3]	1820 [4]
–	60	909	1024	1933	1817	[2]	1500 [3]	1950 [4]
1600	–	909	1024	1933	1817	[2]	1600 [3]	2080 [4]
–	66	960	1075	2035	1919	[2]	1650 [3]	2145 [4]
1800	72	1016	1131	2147	2032	[2]	1800 [3]	2340 [4]
–	78	1127	1242	2369	2254	[2]	2000 [3]	2600 [4]
2000	–	1127	1242	2369	2254	[2]	2000 [3]	2600 [4]

1) The dimensions are reference values. They may vary depending on the pressure rating, design and order option.
2) Depends on the liner → 91
3) Order code for "Design", option F "Fixed flange, short installed length" and option J "Fixed flange, short installed length, 0 x DN inlet/outlet runs"
4) Order code for "Design", option G "Fixed flange, long installed length" and option K "Fixed flange, long installed length 0 x DN inlet/outlet runs"

DN 2200 to 3000 mm (84 to 120 in)

DN		Order code for "Design" Option F, J				K	L
		D [1]	E [1]	F [1]	M [1]		
[mm]	[in]	[mm]	[mm]	[mm]	[mm]	[mm]	[mm]
–	84	1227	1342	2569	2454	[2]	2200
2200	–	1227	1342	2569	2454	[2]	2200
–	90	1332	1447	2779	2664	[2]	2400
2400	–	1332	1447	2783	2664	[2]	2400
–	96	1431	1546	2977	2861	[2]	2450

DN		Order code for "Design" Option F, J				K	L
		D [1]	E [1]	F [1]	M [1]		
[mm]	[in]	[mm]	[mm]	[mm]	[mm]	[mm]	[mm]
–	102	1516	1631	3147	3032	[2]	2600
2600	–	1442	1557	2999	2883	[2]	2600
–	108	1602	1718	3320	3204	[2]	2750
2800	–	1547	1662	3209	3093	[2]	2800
–	114	1688	1803	3491	3375	[2]	2900
3000	–	1647	1762	3409	3293	[2]	3000
–	120	1774	1889	3663	3547	[2]	3050

1) The dimensions are reference values. They may vary depending on the pressure rating, design and order option.
2) Depends on the liner → 🖹 91

Remote version

Transmitter remote version

Order code for "Housing", option N "Remote, polycarbonate" or option P "Remote, aluminum coated"

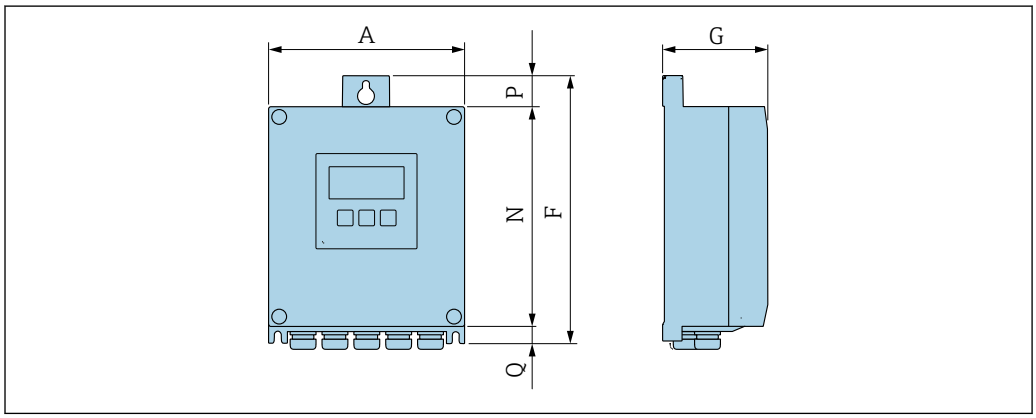

A0033789

Order code for "Transmitter housing", option P "Remote, aluminum, coated"

A [mm]	F [mm]	G [mm]	N [mm]	P [mm]	Q [mm]
167	232	80	187	24	21

Order code for "Transmitter housing", option N "Remote, polycarbonate"

A [mm]	F [mm]	G [mm]	N [mm]	P [mm]	Q [mm]
177	234	90	197	17	22

Sensor connection housing

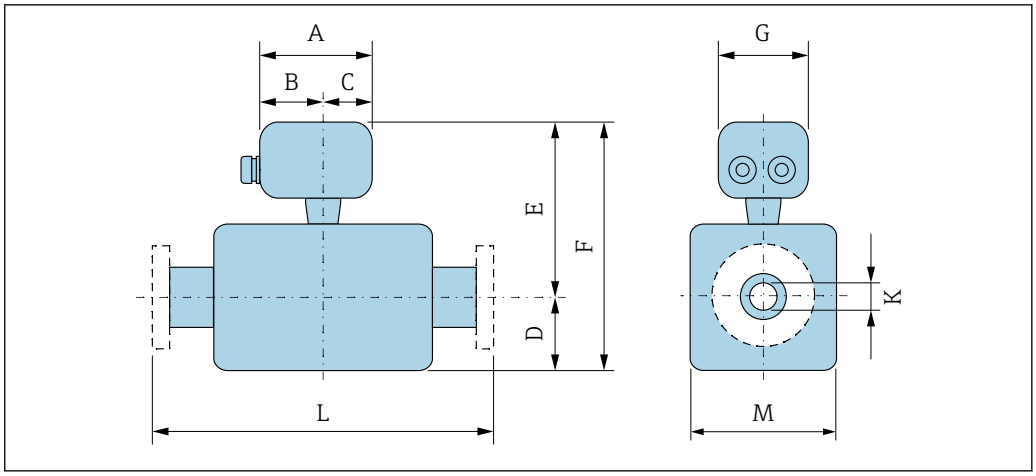

A0033784

Aluminum, coated

A [mm]	B [mm]	C [mm]	G [mm]
148	94	54	136

Polycarbonate (only in conjunction with order code for "Sensor option", options CA...CE)

A [mm]	B [mm]	C [mm]	G [mm]
113	62	51	112

DN 25 to 300 mm (1 to 12 in): Sensor with aluminum half-shell housing

DN		Order code for "Design"									
		Options D, E, H, I				Option C					
		D [1]	E [1]	F [1]	M [1]	D [1]	E [1]	F [1]	M [1]	K	L
[mm]	[in]	[mm]	[mm]	[mm]	[mm]	[mm]	[mm]	[mm]	[mm]	[mm]	[mm]
25	1	84	200	284	120	–	–	–	–	[2]	200
32	–	84	200	284	120	–	–	–	–	[2]	200
40	1 ½	84	200	284	120	–	–	–	–	[2]	200
50	2	84	200	284	120	84	200	284	120	[2]	200
65	–	109	225	334	180	84	200	284	120	[2]	200
80	3	109	225	334	180	84	200	284	120	[2]	200
100	4	109	225	334	180	109	225	334	180	[2]	250
125	–	150	265	415	260	109	225	334	180	[2]	250
150	6	150	265	415	260	109	225	334	180	[2]	300
200	8	180	290	470	324	150	265	415	260	[2]	350
250	10	205	315	520	400	150	265	415	260	[2]	450
300	12	230	340	570	460	180	290	470	324	[2]	500

1) The dimensions are reference values. They may vary depending on the pressure rating, design and order option.
2) Depends on the liner → 🖹 91

DN 25 to 300 mm (1 to 12 in): Sensor with fully welded carbon steel housing

DN		Order code for "Design"								K	L
		Option E				Option C					
		D [1]	E [1]	F [1]	M [1]	D [1]	E [1]	F [1]	M [1]		
[mm]	[in]	[mm]	[mm]	[mm]	[mm]	[mm]	[mm]	[mm]	[mm]	[mm]	[mm]
25	1	70	200	270	140	–	–	–	–	[2]	200
32	–	70	200	270	140	–	–	–	–	[2]	200
40	1 ½	70	200	270	140	–	–	–	–	[2]	200
50	2	70	200	270	140	70	200	270	140	[2]	200
65	–	82	225	307	165	70	200	270	140	[2]	200
80	3	87	225	312	175	70	200	270	140	[2]	200
100	4	100	225	325	200	82	225	307	165	[2]	250
125	–	113	265	378	226	87	225	312	175	[2]	250
150	6	134	265	399	269	100	225	325	200	[2]	300
200	8	160	290	450	320	113	265	378	226	[2]	350
250	10	193	315	508	387	134	265	399	269	[2]	450
300	12	218	340	558	437	160	290	450	320	[2]	500

1) The dimensions are reference values. They may vary depending on the pressure rating, design and order option.
2) Depends on the liner → 🖹 91

DN 350 to 400 mm (14 to 16 in)

DN		Order code for "Design" Options E, I				K	L
		D [1]	E [1]	F [1]	M [1]		
[mm]	[in]	[mm]	[mm]	[mm]	[mm]	[mm]	[mm]
350	14	282	379	679	564	[2]	550
375	15	308	423	731	616	[2]	550
400	16	308	423	731	616	[2]	600

1) The dimensions are reference values. They may vary depending on the pressure rating, design and order option.
2) Depends on the liner → 🖹 91

DN 450 to 900 mm (18 to 36 in)

DN		Order code for "Design"								K	L	
		Options F, J				Options G, K						
		D [1]	E [1]	F [1]	M [1]	D [1]	E [1]	F [1]	M [1]			
[mm]	[in]	[mm]	[mm]	[mm]	[mm]	[mm]	[mm]	[mm]	[mm]	[mm]	[mm]	
450	18	290	405	695	580	333	448	781	666	[2]	600 [3]	650 [4]
500	20	315	430	745	630	359	474	833	717	[2]	600 [3]	650 [4]
600	24	365	480	845	730	411	526	937	821	[2]	600 [3]	780 [4]
700	28	426	541	967	851	512	627	1139	1024	[2]	700 [3]	910 [4]
750	30	463	578	1041	926	512	627	1139	1024	[2]	750 [3]	975 [4]

DN		Order code for "Design"								K	L	
		Options F, J				Options G, K						
		D [1]	E [1]	F [1]	M [1]	D [1]	E [1]	F [1]	M [1]			
[mm]	[in]	[mm]	[mm]	[mm]	[mm]	[mm]	[mm]	[mm]	[mm]	[mm]	[mm]	
800	32	482	597	1079	964	534	649	1183	1065	[2]	800 [3]	1040 [4]
900	36	532	647	1179	1064	610	725	1335	1218	[2]	900 [3]	1170 [4]

1) The dimensions are reference values. They may vary depending on the pressure rating, design and order option.
2) Depends on the liner → 🖹 91
3) Order code for "Design", option F "Fixed flange, short installed length" and option J "Fixed flange, short installed length, 0 x DN inlet/outlet runs"
4) Order code for "Design", option G "Fixed flange, long installed length" and option K "Fixed flange, long installed length 0 x DN inlet/outlet runs"

DN 1000 to 2000 mm (40 to 78 in)

DN		Order code for "Design" Options F, G, J, K				K	L	
		D [1]	E [1]	F [1]	M [1]			
[mm]	[in]	[mm]	[mm]	[mm]	[mm]	[mm]	[mm]	
1000	40	582	697	1279	1164	[2]	1000 [3]	1300 [4]
–	42	618	733	1351	1236	[2]	1050 [3]	1365 [4]
1200	48	696	811	1507	1392	[2]	1200 [3]	1560 [4]
–	54	809	924	1733	1617	[2]	1350 [3]	1755 [4]
1400	–	809	924	1733	1617	[2]	1400 [3]	1820 [4]
–	60	909	1024	1933	1817	[2]	1500 [3]	1950 [4]
1600	–	909	1024	1933	1817	[2]	1600 [3]	2080 [4]
–	66	960	1075	2035	1919	[2]	1650 [3]	2145 [4]
1800	72	1016	1131	2147	2032	[2]	1800 [3]	2340 [4]
–	78	1127	1242	2369	2254	[2]	2000 [3]	2600 [4]
2000	–	1127	1242	2369	2254	[2]	2000 [3]	2600 [4]

1) The dimensions are reference values. They may vary depending on the pressure rating, design and order option.
2) Internal diameter depends on the liner, see the measuring tube specification → 🖹 91
3) Order code for "Design", option F "Fixed flange, short installed length" and option J "Fixed flange, short installed length, 0 x DN inlet/outlet runs"
4) Order code for "Design", option G "Fixed flange, long installed length" and option K "Fixed flange, long installed length 0 x DN inlet/outlet runs"

DN 2200 to 3000 mm (84 to 120 in)

DN		Order code for "Design" Option F, J				K	L
		D [1]	E [1]	F [1]	M [1]		
[mm]	[in]	[mm]	[mm]	[mm]	[mm]	[mm]	[mm]
–	84	1227	1342	2569	2454	[2]	2200
2200	–	1227	1342	2569	2454	[2]	2200
–	90	1332	1447	2779	2664	[2]	2400
2400	–	1332	1447	2783	2664	[2]	2400
–	96	1431	1546	2977	2861	[2]	2450

DN		Order code for "Design" Option F, J				K	L
		D [1]	E [1]	F [1]	M [1]		
[mm]	[in]	[mm]	[mm]	[mm]	[mm]	[mm]	[mm]
–	102	1516	1631	3147	3032	[2]	2600
2600	–	1442	1557	2999	2883	[2]	2600
–	108	1602	1718	3320	3204	[2]	2750
2800	–	1547	1662	3209	3093	[2]	2800
–	114	1688	1803	3491	3375	[2]	2900
3000	–	1647	1762	3409	3293	[2]	3000
–	120	1774	1889	3663	3547	[2]	3050

1) The dimensions are reference values. They may vary depending on the pressure rating, design and order option.
2) Internal diameter depends on the liner, see the measuring tube specification → 🖹 91

Flange connections

Fixed flange

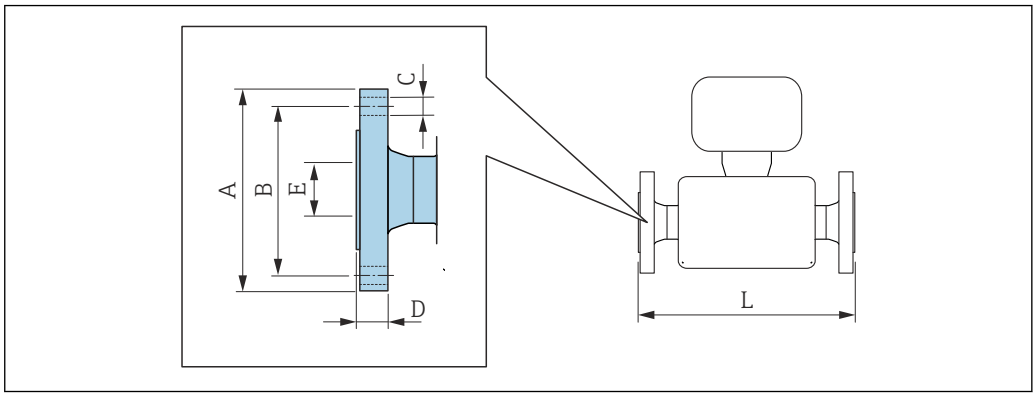

A0015621

Flange in accordance with EN 1092-1 (DIN 2501 / DIN 2512N): PN 6 **Carbon steel:** *order code for "Process connection", option* **D1K** **Stainless steel:** *order code for "Process connection", option* **D1S**						
DN **[mm]**	**A** **[mm]**	**B** **[mm]**	**C** **[mm]**	**D** **[mm]**	**E** **[mm]**	**L** **[mm]**
350	490	445	12 × Ø22	22	1)	2)
400	540	495	16 × Ø22	22		
450	595	565	20 × Ø26	26		
500	645	600	20 × Ø22	24		
600	755	705	20 × Ø26	30		
700	860	810	24 × Ø26	30		
800	975	920	24 × Ø30	30		
900	1075	1020	24 × Ø30	34		
1000	1175	1120	28 × Ø30	38		
1200	1405	1340	32 × Ø33	42		
1400	1630	1560	36 × Ø36	56		
1600	1830	1760	40 × Ø36	63		
1800	2045	1970	44 × Ø39	69		
2000	2265	2180	48 × Ø42	74		
2200	2475	2390	52 × Ø42	81		
2400	2685	2600	56 × Ø42	87		
2600	2905	2810	60 × Ø48	91		
2800	3115	3020	64 × Ø48	101		
3000	3315	3220	68 × Ø48	102		
Surface roughness (flange): EN 1092-1 Form B1 (DIN 2526 Form C), Ra 6.3 to 12.5 µm						

1) Depends on the liner → 🖹 91
2) Total installed length is independent of the process connections. Length according to DVGW (German Technical and Scientific Association for Gas and Water) → 🖹 55 (compact version) → 🖹 59 (remote version)

Flange in accordance with EN 1092-1 (DIN 2501 / DIN 2512N): PN 10
Carbon steel: *order code for "Process connection", option* **D2K**
Stainless steel: *order code for "Process connection", option* **D2S**

DN [mm]	A [mm]	B [mm]	C [mm]	D [mm]	E [mm]	L [mm]
200	340	295	8 × Ø22	26	1)	2)
250	395	350	12 × Ø22	28		
300	445	400	12 × Ø22	28		
350	505	460	16 × Ø22	26		
400	565	515	16 × Ø26	26		
450	615	565	20 × Ø26	26		
500	670	620	20 × Ø26	28		
600	780	725	20 × Ø30	30		
700	895	840	24 × Ø30	35		
800	1015	950	24 × Ø33	38		
900	1115	1050	28 × Ø33	38		
1000	1230	1160	28 × Ø36	44		
1200	1455	1380	32 × Ø39	55		
1400	1675	1590	36 × Ø42	65		
1600	1915	1820	40 × Ø48	75		
1800	2115	2020	44 × Ø48	85		
2000	2325	2230	48 × Ø48	90		
2200	2550	2440	52 × Ø56	100		
2400	2760	2650	56 × Ø56	110		
2600	2960	2850	60 × Ø56	110		
2800	3180	3070	64 × Ø56	124		
3000	3405	3290	68 × Ø62	132		
Surface roughness (flange): EN 1092-1 Form B1 (DIN 2526 Form C), Ra 6.3 to 12.5 µm						

1) Depends on the liner → 🖹 91
2) Total installed length is independent of the process connections. Length according to DVGW (German Technical and Scientific Association for Gas and Water) → 🖹 55 (compact version) → 🖹 59 (remote version)

Flange in accordance with EN 1092-1 (DIN 2501 / DIN 2512N): PN 16
Carbon steel: *order code for "Process connection", option* **D3K**
Stainless steel: *order code for "Process connection", option* **D3S**

DN [mm]	A [mm]	B [mm]	C [mm]	D [mm]	E [mm]	L [mm]
65	185	145	8 × Ø18	20	1)	2)
80	200	160	8 × Ø18	20		
100	220	180	8 × Ø18	22		
125	250	210	8 × Ø18	24		
150	285	240	8 × Ø22	24		
200	340	295	12 × Ø22	26		
250	405	355	12 × Ø26	32		
300	460	410	12 × Ø26	32		

Flange in accordance with EN 1092-1 (DIN 2501 / DIN 2512N): PN 16
Carbon steel: *order code for "Process connection", option* **D3K**
Stainless steel: *order code for "Process connection", option* **D3S**

DN [mm]	A [mm]	B [mm]	C [mm]	D [mm]	E [mm]	L [mm]
350	520	470	16 × Ø26	30		
400	580	525	16 × Ø30	32		
450	640	585	20 × Ø30	34		
500	715	650	20 × Ø33	36		
600	840	770	20 × Ø36	40		
700	910	840	24 × Ø36	40		
800	1025	950	24 × Ø39	41		
900	1125	1050	28 × Ø39	48		
1000	1255	1170	28 × Ø42	59		
1200	1485	1390	32 × Ø48	78		
1400	1685	1590	36 × Ø48	84		
1600	1930	1820	40 × Ø56	102		
1800	2130	2020	44 × Ø56	110		
2000	2345	2230	48 × Ø62	124		

Surface roughness (flange): EN 1092-1 Form B1 (DIN 2526 Form C), Ra 6.3 to 12.5 µm

1) Depends on the liner→ 🖹 91
2) Total length is independent of the process connections. Length according to DVGW (German Technical and Scientific Association for Gas and Water) → 🖹 55 (compact version) → 🖹 59 (remote version)

Flange in accordance with EN 1092-1 (DIN 2501 / DIN 2512N): PN 25
Carbon steel: *order code for "Process connection", option* **D4K**
Stainless steel: *order code for "Process connection", option* **D4S**

DN [mm]	A [mm]	B [mm]	C [mm]	D [mm]	E [mm]	L [mm]
200	360	310	12 × Ø26	32	1)	2)
250	425	370	12 × Ø30	36		
300	485	430	16 × Ø30	40		
350	555	490	16 × Ø33	38		
400	620	550	16 × Ø36	40		
450	670	600	20 × Ø36	46		
500	730	660	20 × Ø36	48		
600	845	770	20 × Ø39	48		
700	960	875	24 × Ø42	50		
800	1085	990	24 × Ø48	53		
900	1185	1090	28 × Ø48	57		
1000	1320	1210	28 × Ø56	63		

Surface roughness (flange): EN 1092-1 Form B1 (DIN 2526 Form C), Ra 6.3 to 12.5 µm

1) Depends on the liner→ 🖹 91
2) Total length is independent of the process connections. Length according to DVGW (German Technical and Scientific Association for Gas and Water) → 🖹 55 (compact version) → 🖹 59 (remote version)

Flange in accordance with EN 1092-1 (DIN 2501 / DIN 2512N): PN 40
Carbon steel: *order code for "Process connection", option* **D5K**
Stainless steel: *order code for "Process connection", option* **D5S**

DN [mm]	A [mm]	B [mm]	C [mm]	D [mm]	E [mm]	L [mm]
25	115	85	4 × Ø14	16	1)	2)
32	140	100	4 × Ø18	18		
40	150	110	4 × Ø18	18		
50	165	125	4 × Ø18	20		
65	185	145	8 × Ø18	24		
80	200	160	8 × Ø18	26		
100	235	190	8 × Ø22	26		
125	270	220	8 × Ø26	28		
150	300	250	8 × Ø26	30		
Surface roughness (flange): EN 1092-1 Form B1 (DIN 2526 Form C), Ra 6.3 to 12.5 µm						

1) Depends on the liner→ 🖹 91
2) Total length is independent of the process connections. Length according to DVGW (German Technical and Scientific Association for Gas and Water) → 🖹 55 (compact version) → 🖹 59 (remote version)

Flange according to ASME B16.5, Class 150
Carbon steel: *order code for "Process connection", option* **A1K**
Stainless steel: *order code for "Process connection", option* **A1S**

DN		A	B	C	D	E	L
[mm]	[in]	[mm]	[mm]	[mm]	[mm]	[mm]	[mm]
25	1	108	79.2	4 × Ø16	12.6	1)	2)
40	1 ½	127	98.6	4 × Ø16	15.9		
50	2	152.4	120.7	4 × Ø19.1	17.5		
80	3	190.5	152.4	4 × Ø19.1	22.3		
100	4	228.6	190.5	8 × Ø19.1	22.3		
150	6	279.4	241.3	8 × Ø22.4	23.8		
200	8	342.9	298.5	8 × Ø22.4	26.8		
250	10	406.4	362	12 × Ø25.4	29.6		
300	12	482.6	431.8	12 × Ø25.4	30.2		
350	14	535	476.3	12 × Ø28.6	35.4		
400	16	595	539.8	16 × Ø28.6	37		
450	18	635	577.9	16 × Ø31.8	40.1		
500	20	700	635	20 × Ø31.8	43.3		
600	24	815	749.3	20 × Ø34.9	48.1		
Surface roughness (flange): Ra 6.3 to 12.5 µm							

1) Depends on the liner→ 🖹 91
2) Total length is independent of the process connections. Length according to DVGW (German Technical and Scientific Association for Gas and Water) → 🖹 55 (compact version) → 🖹 59 (remote version)

Flange according to ASME B16.5, Class 300
Carbon steel: *order code for "Process connection", option* **A2K**
Stainless steel: *order code for "Process connection", option* **A2S**

DN		A	B	C	D	E	L
[mm]	[in]	[mm]	[mm]	[mm]	[mm]	[mm]	[mm]
25	1	123.9	88.9	4 × Ø19.1	15.9	1)	2)
40	1 ½	155.4	114.3	4 × Ø22.4	19		
50	2	165.1	127	8 × Ø19.1	20.8		
80	3	209.6	168.1	8 × Ø22.4	26.8		
100	4	254	200.2	8 × Ø22.4	30.2		
150	6	317.5	269.7	12 × Ø22.4	35		
Surface roughness (flange): Ra 6.3 to 12.5 µm							

1) Depends on the liner→ 🖹 91
2) Total length is independent of the process connections. Length according to DVGW (German Technical and Scientific Association for Gas and Water) → 🖹 55 (compact version) → 🖹 59 (remote version)

Flange according to JIS B2220, 10K
Carbon steel: *order code for "Process connection", option* **N3K**
Stainless steel: *order code for "Process connection", option* **N3S**

DN [mm]	A [mm]	B [mm]	C [mm]	D [mm]	E [mm]	L [mm]
50	155	120	4 × Ø19	16	1)	2)
65	175	140	4 × Ø19	18		
80	185	150	8 × Ø19	18		
100	210	175	8 × Ø19	18		
125	250	210	8 × Ø23	20		
150	280	240	8 × Ø23	22		
200	330	290	12 × Ø23	22		
250	400	355	12 × Ø25	24		
300	445	400	16 × Ø25	24		
Surface roughness (flange): Ra 6.3 to 12.5 µm						

1) Depends on the liner→ 🖹 91
2) Total length is independent of the process connections. Length according to DVGW (German Technical and Scientific Association for Gas and Water) → 🖹 55 (compact version) → 🖹 59 (remote version)

Flange according to JIS B2220, 20K
Carbon steel: *order code for "Process connection", option* **N4K**
Stainless steel: *order code for "Process connection", option* **N4S**

DN [mm]	A [mm]	B [mm]	C [mm]	D [mm]	E [mm]	L [mm]
25	125	90	4 × Ø19	16	1)	2)
32	135	100	4 × Ø19	18		
40	140	105	4 × Ø19	18		
50	155	120	8 × Ø19	18		
65	175	140	8 × Ø19	20		
80	200	160	8 × Ø23	22		
100	225	185	8 × Ø23	24		

Flange according to JIS B2220, 20K
Carbon steel: *order code for "Process connection", option* **N4K**
Stainless steel: *order code for "Process connection", option* **N4S**

DN [mm]	A [mm]	B [mm]	C [mm]	D [mm]	E [mm]	L [mm]
125	270	225	8 × Ø25	26		
150	305	260	12 × Ø25	28		
200	350	305	12 × Ø25	30		
250	430	380	12 × Ø27	34		
300	480	430	16 × Ø27	36		
Surface roughness (flange): Ra 6.3 to 12.5 µm						

1) Depends on the liner→ 🖹 91
2) Total length is independent of the process connections. Length according to DVGW (German Technical and Scientific Association for Gas and Water) → 🖹 55 (compact version) → 🖹 59 (remote version)

Flange according to AWWA, Class D
Order code for "Process connection", option **W1K**

DN		A	B	C	D	E	L
[mm]	[in]	[mm]	[mm]	[mm]	[mm]	[mm]	[mm]
700	28	927	863.6	28 × Ø35	33.4	1)	2)
750	30	984	914.4	28 × Ø35	35.0		
800	32	1060	977.9	28 × Ø42	38.1		
900	36	1168	1085.9	32 × Ø42	41.3		
1000	40	1289	1200.2	36 × Ø42	41.3		
–	42	1346	1257.3	36 × Ø42	44.5		
1200	48	1511	1422.4	44 × Ø42	47.7		
–	54	1683	1593.9	44 × Ø48	54.0		
–	60	1855	1759.0	52 × Ø48	57.2		
–	66	2032	1930.4	52 × Ø48	63.5		
1800	72	2197	2095.5	60 × Ø48	66.7		
–	78	2362	2260.6	64 × Ø54	69.9		
–	84	2535	2425.7	64 × Ø54	73.1		
–	90	2705	2717.8	68 × Ø60	76.2		
–	96	2877	2755.9	68 × Ø60.3	82.55		
–	102	3048	2908.3	68 × Ø66.7	82.55		
–	108	3219	3067.0	68 × Ø66.7	85.73		
–	114	3391	3219.5	68 × Ø73	88.90		
–	120	3562	3371.8	68 × Ø73	88.90		
Surface roughness (flange): Ra 6.3 to 12.5 µm							

1) Depends on the liner → 🖹 91
2) Total length is independent of the process connections. Installed length according to DVGW → 🖹 55 (compact version) → 🖹 59 (remote version)

Flange according to AS 2129, Tab. E
Order code for "Process connection", option **M2K**

DN [mm]	A [mm]	B [mm]	C [mm]	D [mm]	E [mm]	L [mm]
80	185	146	4 × Ø18	12	1)	2)
100	215	178	8 × Ø18	13		
150	280	235	8 × Ø22	17		
200	335	292	8 × Ø22	19		
250	405	356	12 × Ø22	22		
300	455	406	12 × Ø26	25		
350	525	470	12 × Ø26	30		
400	580	521	12 × Ø26	32		
450	640	584	16 × Ø26	35		
500	705	641	16 × Ø26	38		
600	825	756	16 × Ø33	48		
700	910	845	20 × Ø33	51		
750	995	927	20 × Ø36	54		
800	1060	984	20 × Ø36	54		
900	1175	1092	24 × Ø36	64		
1000	1255	1175	24 × Ø39	67		
1200	1490	1410	32 × Ø39	79		
Surface roughness (flange): Ra 6.3 to 12.5 µm						

1) Depends on the liner→ 🖹 91
2) Total length is independent of the process connections. Length according to DVGW (German Technical and Scientific Association for Gas and Water) → 🖹 55 (compact version) → 🖹 59 (remote version)

Flange according to AS 4087, PN 16
Order code for "Process connection", option **M3K**

DN [mm]	A [mm]	B [mm]	C [mm]	D [mm]	E [mm]	L [mm]
80	185	146	4 × Ø18	12	1)	2)
100	215	178	4 × Ø18	13		
150	280	235	8 × Ø18	13		
200	335	292	8 × Ø18	19		
250	405	356	8 × Ø22	19		
300	455	406	12 × Ø22	23		
350	525	470	12 × Ø26	30		
375	550	495	12 × Ø26	30		
400	580	521	12 × Ø26	32		
450	640	584	12 × Ø26	30		
500	705	641	16 × Ø26	38		
600	825	756	16 × Ø30	48		
700	910	845	20 × Ø30	56		
750	995	927	20 × Ø33	56		
800	1060	984	20 × Ø36	56		

Flange according to AS 4087, PN 16 *Order code for "Process connection", option* **M3K**						
DN [mm]	**A [mm]**	**B [mm]**	**C [mm]**	**D [mm]**	**E [mm]**	**L [mm]**
900	1175	1092	24 × Ø36	66		
1000	1255	1175	24 × Ø36	66		
1200	1490	1410	32 × Ø36	76		
Surface roughness (flange): Ra 6.3 to 12.5 µm						

1) Depends on the liner→ 🖹 91
2) Total length is independent of the process connections. Length according to DVGW (German Technical and Scientific Association for Gas and Water) → 🖹 55 (compact version) → 🖹 59 (remote version)

Lap joint flange

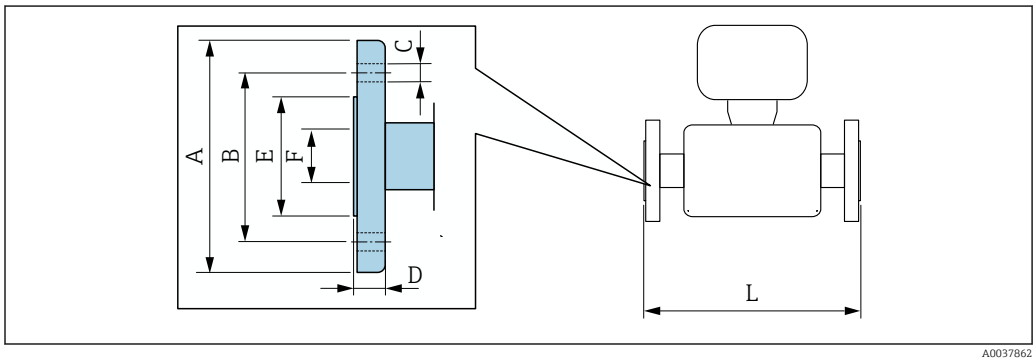

A0037862

Lap joint flange in accordance with EN 1092-1 (DIN 2501 / DIN 2512N): PN 10 **Carbon steel:** *order code for "Process connection", option* **D22** **Stainless steel:** *order code for "Process connection", option* **D24**								
DN		**A**	**B**	**C**	**D**	**E**	**F**	**L**
[mm]	**[in]**	**[mm]**	**[mm]**	**[mm]**	**[mm]**	**[mm]**	**[mm]**	**[mm]**
200	8	340	295	8 × Ø22	24	264	1)	2)
250	10	395	350	12 × Ø22	26	317		
300	12	445	400	12 × Ø22	26	367		
Surface roughness (flange): Ra 6.3 to 12.5 µm								

1) Depends on the liner→ 🖹 91
2) Total length is independent of the process connections. Length according to DVGW (German Technical and Scientific Association for Gas and Water) → 🖹 55 (compact version) → 🖹 59 (remote version)

Lap joint flange in accordance with EN 1092-1 (DIN 2501 / DIN 2512N): PN 16 **Carbon steel:** *order code for "Process connection", option* **D32** **Stainless steel:** *order code for "Process connection", option* **D34**								
DN		**A**	**B**	**C**	**D**	**E**	**F**	**L**
[mm]	**[in]**	**[mm]**	**[mm]**	**[mm]**	**[mm]**	**[mm]**	**[mm]**	**[mm]**
25	1	115	85	4 × Ø14	16	49	1)	2)
32	-	140	100	4 × Ø18	18	65		
40	1 ½	150	110	4 × Ø18	18	71		
50	2	165	125	4 × Ø18	20	88		
65	-	185	145	8 × Ø18	20	103		
80	3	200	160	8 × Ø18	20	120		

Lap joint flange in accordance with EN 1092-1 (DIN 2501 / DIN 2512N): PN 16
Carbon steel: *order code for "Process connection", option* **D32**
Stainless steel: *order code for "Process connection", option* **D34**

DN		A	B	C	D	E	F	L
[mm]	[in]	[mm]	[mm]	[mm]	[mm]	[mm]	[mm]	[mm]
100	4	220	180	8 × Ø18	22	148		
125	-	250	210	8 × Ø18	22	177		
150	6	285	240	8 × Ø22	24	209		
200	8	340	295	12 × Ø22	26	264		
250	10	405	355	12 × Ø26	29	317		
300	12	460	410	12 × Ø26	32	367		
Surface roughness (flange): Ra 6.3 to 12.5 µm								

1) Depends on the liner→ 🖹 91
2) Total length is independent of the process connections. Length according to DVGW (German Technical and Scientific Association for Gas and Water) → 🖹 55 (compact version) → 🖹 59 (remote version)

Lap joint flange according to ASME B16.5, Class 150
Carbon steel: *order code for "Process connection", option* **A12**
Stainless steel: *order code for "Process connection", option* **A14**

DN		A	B	C	D	E	F	L
[mm]	[in]	[mm]	[mm]	[mm]	[mm]	[mm]	[mm]	[mm]
25	1	110	80	4 × Ø16	14	49	1)	2)
40	1 ½	125	98	4 × Ø16	17.5	71		
50	2	150	121	4 × Ø19	19	88		
80	3	190	152	4 × Ø19	24	120		
100	4	230	190	8 × Ø19	24	148		
150	6	280	241	8 × Ø23	25	209		
200	8	345	298	8 × Ø23	29	264		
250	10	405	362	12 × Ø25	30	317		
300	12	485	432	12 × Ø25	32	378		
Surface roughness (flange): Ra 6.3 to 12.5 µm								

1) Depends on the liner→ 🖹 91
2) Total length is independent of the process connections. Length according to DVGW (German Technical and Scientific Association for Gas and Water) → 🖹 55 (compact version) → 🖹 59 (remote version)

Lap joint flange, stamped plate

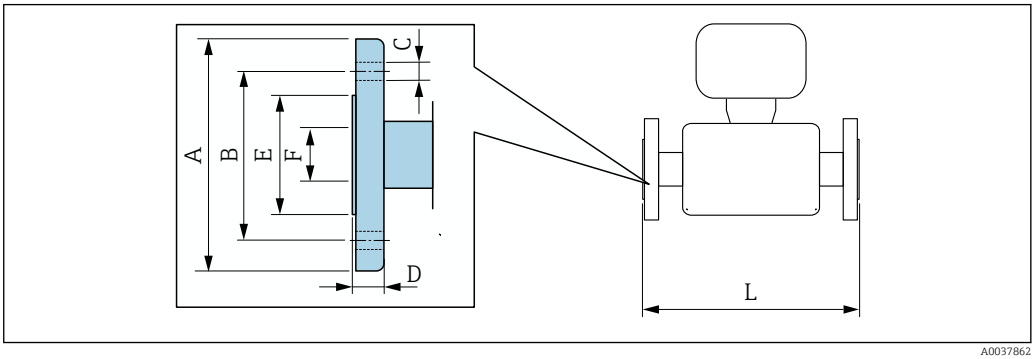

A0037862

Lap joint flange, stamped plate in accordance with EN 1092-1 (DIN 2501 / DIN 2512N): PN 10 **Carbon steel:** *order code for "Process connection", option* **D21** **Stainless steel:** *order code for "Process connection", option* **D23**							
DN **[mm]**	**A** **[mm]**	**B** **[mm]**	**C** **[mm]**	**D** **[mm]**	**E** **[mm]**	**F** **[mm]**	**L** **[mm]**
25	115	85	4 x Ø13.5	16.5	49	1)	2)
32	140	100	4 x Ø17.5	17	65		
40	150	110	4 x Ø17.5	16.5	71		
50	165	125	4 x Ø17.5	18.5	88		
65	185	145	4 x Ø17.5	20	103		
80	200	160	8 x Ø17.5	23.5	120		
100	220	180	8 x Ø17.5	24.5	148		
125	250	210	8 x Ø17.5	24	177		
150	285	240	8 x Ø21.5	25	209		
200	340	295	8 x Ø21.5	27.5	264		
250	405	350	12 x Ø21.5	30.5	317		
300	445	400	12 x Ø21.5	34.5	367		
Surface roughness (flange): Ra 6.3 to 12.5 µm							

1) Depends on the liner→ 🖹 91
2) Total length is independent of the process connections. Length according to DVGW (German Technical and Scientific Association for Gas and Water) → 🖹 55 (compact version) → 🖹 59 (remote version)

Accessories

Weather protection cover

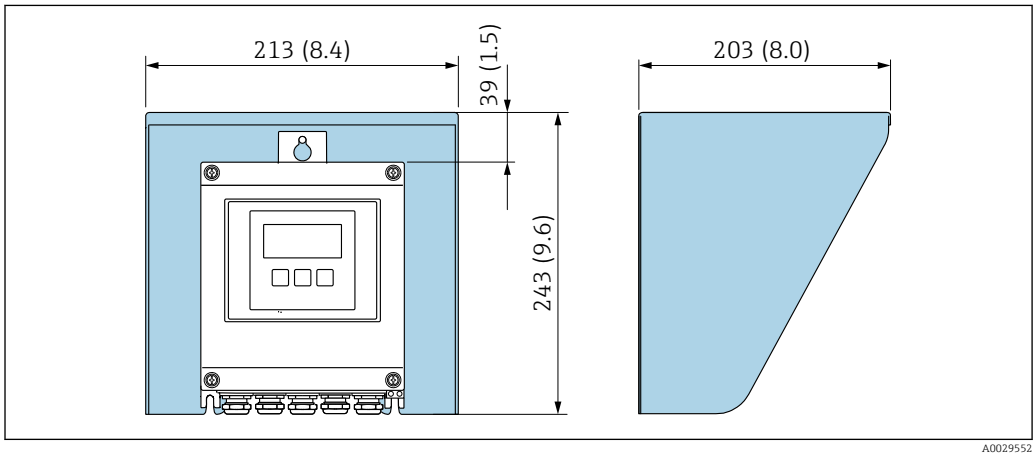

31 Weather protection cover; engineering unit mm (in)

Ground disks for flange connections

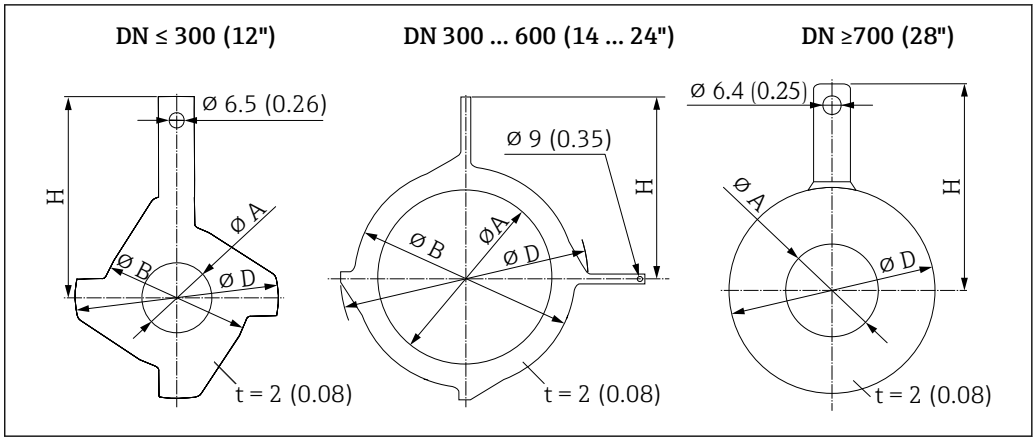

DN		Pressure rating	A		B		D		H	
[mm]	[inch]		[mm]	[inch]	[mm]	[inch]	[mm]	[inch]	[mm]	[inch]
25	1"	[1]	26	1.02	62	2.44	77.5	3.05	87.5	3.44
32	1 ¼"	[1]	35	1.38	80	3.15	87.5	3.44	94.5	3.72
40	1 ½"	[1]	41	1.61	82	3.23	101	3.98	103	4.06
50	2"	[1]	52	2.05	101	3.98	115.5	4.55	108	4.25
65	2 ½"	[1]	68	2.68	121	4.76	131.5	5.18	118	4.65
80	3"	[1]	80	3.15	131	5.16	154.5	6.08	135	5.31
100	4"	[1]	104	4.09	156	6.14	186.5	7.34	153	6.02
125	5"	[1]	130	5.12	187	7.36	206.5	8.13	160	6.30
150	6"	[1]	158	6.22	217	8.54	256	10.08	184	7.24
200	8"	[1]	206	8.11	267	10.51	288	11.34	205	8.07
250	10"	[1]	260	10.2	328	12.91	359	14.13	240	9.45
300	12"	PN 10 PN 16 Cl. 150	312	12.3	375	14.76	413	16.26	273	10.75
		PN 25 JIS 10K JIS 20K	310	12.2	375	14.76	404	15.91	268	10.55
350	14"	PN 6	343	13.5	420	16.54	479	18.86	365	14.37
		PN 10								
		PN 16								
375	15"	PN 16	393	15.5	461	18.2	523	20.6	395	15.6
400	16"	PN 6	393	15.5	470	18.50	542	21.34	395	15.55
		PN 10								
		PN 16								
450	18"	PN 6	439	17.3	525	20.67	583	22.95	417	16.42
		PN 10								
		PN 16								
500	20"	PN 6	493	19.4	575	22.64	650	25.59	460	18.11
		PN 10								
		PN 16								

DN		Pressure rating	A		B		D		H	
[mm]	[inch]		[mm]	[inch]	[mm]	[inch]	[mm]	[inch]	[mm]	[inch]
600	24"	PN 6	593	23.3	676	26.61	766	30.16	522	20.55
		PN 10								
		PN 16								
700	28"	PN 6	697	27.4	–	–	786	30.94	460	18.11
		PN10	693	27.3	–	–	813	32.01	480	18.9
		PN16	687	27.1	–	–	807	31.77	490	19.29
		Cl, D	693	27.3	–	–	832	32.76	494	19.45
750	30"	Cl, D	743	29.3	–	–	883	34.76	523	20.59
800	32"	PN 6	799	31.5	–	–	893	35.16	520	20.47
		PN 10	795	31.3	–	–	920	36.22	540	21.26
		PN 16	789	31.1	–	–	914	35.98	550	21.65
		Cl, D	795	31.3	–	–	940	37.01	561	22.09
900	36"	PN 6	897	35.3	–	–	993	39.09	570	22.44
		PN 10	893	35.2	–	–	1020	40.16	590	23.23
		PN 16	886	34.9	–	–	1014	39.92	595	23.43
		Cl, D	893	35.2	–	–	1048	41.26	615	24.21
1000	40"	PN 6	999	39.3	–	–	1093	43.03	620	24.41
		PN 10	995	39.2	–	–	1127	44.37	650	25.59
		PN 16	988	38.9	–	–	1131	44.53	660	25.98
		Cl, D	995	39.2	–	–	1163	45.79	675	26.57
–	42"	Cl, D	1044	41.1	–	–	1220	48.03	704	27.72
1200	48"	PN 6	1203	47.4	–	–	1310	51.57	733	28.86
		PN 10	1196	47.1	–	–	1344	52.91	760	29.92
		PN 16	1188	46.8	–	–	1345	52.95	775	30.51
		Cl, D	1196	47.1	–	–	1385	54.53	786	30.94

1) In the case of DN 25 to 250, ground disks can be used for all the flange standards/pressure ratings which can be supplied in the standard version

Dimensions in US units

Compact version

Order code for "Housing", option A "Compact, aluminum, coated" or option M "Compact, polycarbonate"

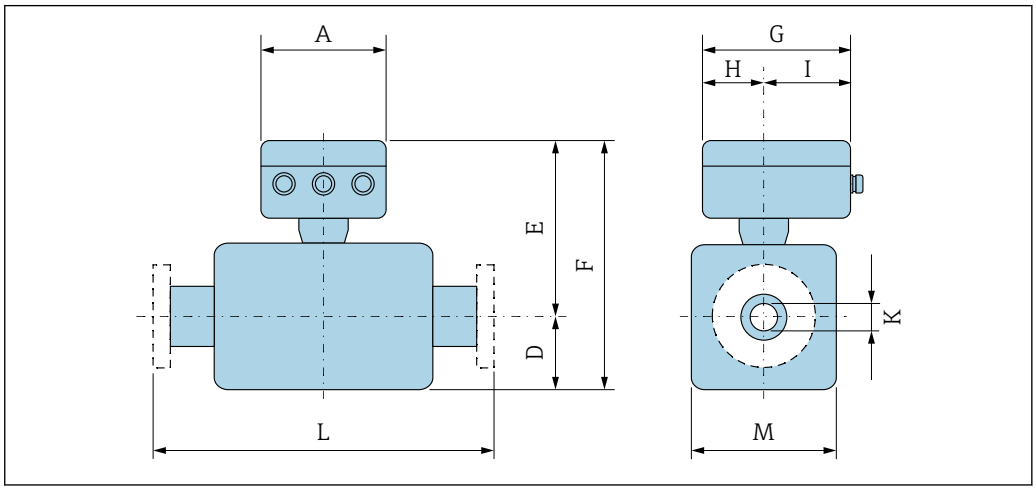

A0033790

A [in]	G [1] [in]	H [in]	I [1] [in]
6.57	7.60	3.54	4.06

1) Depending on the cable gland used: values up to + 1.18 in

DN 1 to 12 in (25 to 300 mm): Sensor with aluminum half-shell housing

DN		Order code for "Design"									
		Options D, E, H, I				Option C					
		D [1]	E [1]	F [1]	M [1]	D [1]	E [1]	F [1]	M [1]	K	L
[mm]	[in]	[in]	[in]	[in]	[in]	[in]	[in]	[in]	[in]	[in]	[in]
25	1	3.31	7.91	11.22	4.72	–	–	–	–	[2]	7.87
32	–	3.31	7.91	11.22	4.72	–	–	–	–	[2]	7.87
40	1 ½	3.31	7.91	11.22	4.72	–	–	–	–	[2]	7.87
50	2	3.31	7.91	11.22	4.72	3.31	7.91	11.22	4.72	[2]	7.87
65	–	4.29	8.9	13.19	7.09	3.31	7.91	11.22	4.72	[2]	7.87
80	3	4.29	8.9	13.19	7.09	3.31	7.91	11.22	4.72	[2]	7.87
100	4	4.29	8.9	13.19	7.09	4.29	8.9	13.19	7.09	[2]	9.84
125	–	5.91	10.47	16.38	10.24	4.29	8.9	13.19	7.09	[2]	9.84
150	6	5.91	10.47	16.38	10.24	4.29	8.9	13.19	7.09	[2]	11.81
200	8	7.09	11.46	18.54	12.76	5.91	10.47	16.38	10.24	[2]	13.78
250	10	8.07	12.44	20.51	15.75	5.91	10.47	16.38	10.24	[2]	17.72
300	12	9.06	13.43	22.48	18.11	7.09	11.46	18.54	12.76	[2]	19.69

1) The dimensions are reference values. They may vary depending on the pressure rating, design and order option.
2) Depends on the liner → 91

DN 14 to 16 in (350 to 400 mm)

DN		Order code for "Design" Options E, I				K	L
		D [1]	E [1]	F [1]	M [1]		
[mm]	[in]	[in]	[in]	[in]	[in]	[in]	[in]
350	14	11.10	15.63	26.73	22.20	[2]	21.65
375	15	12.13	16.65	28.78	24.25	[2]	23.62
400	16	12.13	16.65	28.78	24.25	[2]	23.62

1) The dimensions are reference values. They may vary depending on the pressure rating, design and order option.
2) Depends on the liner → 🖹 91

DN 18 to 36 in (450 to 900 mm)

DN		Order code for "Design"								K	L	
		Options F, J				Options G, K						
		D [1]	E [1]	F [1]	M [1]	D [1]	E [1]	F [1]	M [1]			
[mm]	[in]	[in]	[in]	[in]	[in]	[in]	[in]	[in]	[in]	[in]	[in]	
450	18	11.42	15.94	27.36	22.83	13.11	17.64	30.75	26.22	[2]	23.62 [3]	25.59 [4]
500	20	12.40	16.93	29.33	24.80	14.13	18.66	32.80	28.23	[2]	23.62 [2]	25.59 [4]
600	24	14.37	18.90	33.27	28.74	16.18	20.71	36.89	32.32	[2]	23.62 [2]	30.71 [4]
700	28	16.77	21.30	38.07	33.50	20.16	24.69	44.84	40.31	[2]	27.56 [2]	35.83 [4]
750	30	18.23	22.76	40.98	36.46	20.16	24.69	44.84	40.31	[2]	29.53 [2]	38.39 [4]
800	32	18.98	23.50	42.48	37.95	21.02	25.55	46.57	41.93	[2]	31.5 [2]	40.94 [4]
900	36	20.94	25.47	46.42	41.89	24.02	28.54	52.56	47.95	[2]	35.43 [2]	46.06 [4]

1) The dimensions are reference values. They may vary depending on the pressure rating, design and order option.
2) Depends on the liner → 🖹 91
3) Order code for "Design", option F "Fixed flange, short installed length" and option J "Fixed flange, short installed length, 0 x DN inlet/outlet runs"
4) Order code for "Design", option G "Fixed flange, long installed length" and option K "Fixed flange, long installed length 0 x DN inlet/outlet runs"

DN 40 to 78 in (1000 to 2000 mm)

DN		Order code for "Design" Options F, G, J, K				K	L	
		D [1]	E [1]	F [1]	M [1]			
[mm]	[in]	[in]	[in]	[in]	[in]	[in]	[in]	
1000	40	22.91	27.44	50.35	45.83	[2]	39.37 [3]	51.18 [4]
–	42	24.33	28.86	53.19	48.66	[2]	41.34 [3]	53.74 [4]
1200	48	27.40	31.93	59.33	54.80	[2]	47.24 [3]	61.42 [4]
–	54	31.85	36.38	68.23	63.66	[2]	53.15 [3]	69.09 [4]
1400	–	31.85	36.38	68.23	63.66	[2]	55.12 [3]	71.65 [4]
–	60	35.79	40.31	76.10	71.54	[2]	59.06 [3]	76.77 [4]
1600	–	35.79	40.31	76.10	71.54	[2]	62.99 [3]	81.89 [4]
–	66	37.80	42.32	80.12	75.55	[2]	64.96 [3]	84.45 [4]
1800	72	40.00	44.53	84.53	80.00	[2]	70.87 [3]	92.13 [4]

DN		Order code for "Design" Options F, G, J, K				K	L	
		D [1]	E [1]	F [1]	M [1]			
[mm]	[in]	[in]	[in]	[in]	[in]	[in]	[in]	
–	78	44.37	48.90	93.27	88.74	[2]	78.74 [3]	102.36 [4]
2000	–	44.37	48.90	93.27	88.74	[2]	78.74 [3]	102.36 [4]

1) The dimensions are reference values. They may vary depending on the pressure rating, design and order option.
2) Depends on the liner → 91
3) Order code for "Design", option F "Fixed flange, short installed length" and option J "Fixed flange, short installed length, 0 x DN inlet/outlet runs"
4) Order code for "Design", option G "Fixed flange, long installed length" and option K "Fixed flange, long installed length 0 x DN inlet/outlet runs"

DN 84 to 120 in (2200 to 3000 mm)

DN		Order code for "Design" Option F, J				K	L
		D [1]	E [1]	F [1]	M [1]		
[mm]	[in]	[in]	[in]	[in]	[in]	[in]	[in]
–	84	48.31	52.83	101.14	96.61	[2]	86.61
2200	–	48.31	52.83	101.14	96.61	[2]	86.61
–	90	52.44	56.97	109.41	104.88	[2]	94.49
2400	–	52.44	56.97	109.57	104.88	[2]	94.49
–	96	56.34	60.87	117.20	112.64	[2]	96.46
–	102	59.69	64.21	123.90	119.37	[2]	102.36
2600	–	56.77	61.30	118.07	113.50	[2]	102.36
–	108	63.07	67.64	130.71	126.14	[2]	108.27
2800	–	60.91	65.43	126.34	121.77	[2]	110.24
–	114	66.46	70.98	137.44	132.87	[2]	114.17
3000	–	64.84	69.37	134.21	129.65	[2]	118.11
–	120	69.84	74.37	144.21	139.65	[2]	120.08

1) The dimensions are reference values. They may vary depending on the pressure rating, design and order option.
2) Depends on the liner → 91

Remote version

Transmitter remote version

Order code for "Housing", option N "Remote, polycarbonate" or option P "Remote, aluminum coated"

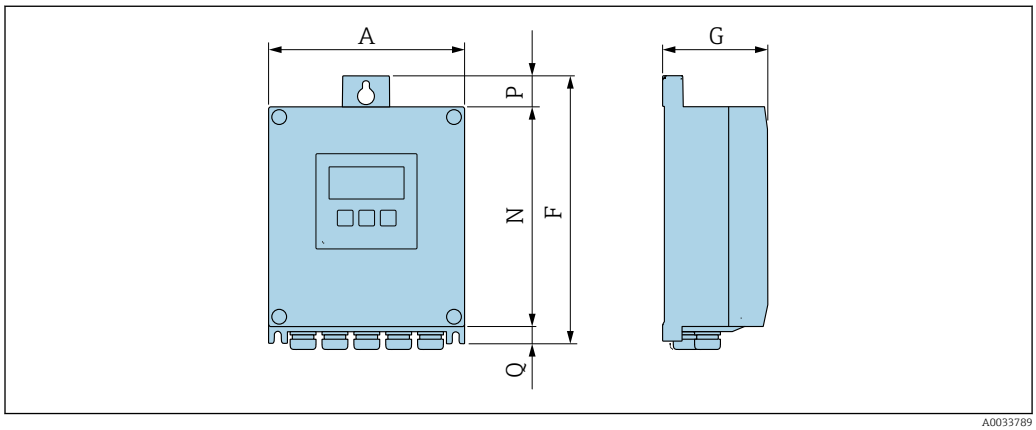

Order code for "Transmitter housing", option P "Remote, aluminum, coated"

A [in]	F [in]	G [in]	N [in]	P [in]	Q [in]
6.57	9.13	3.15	7.36	0.94	0.83

Order code for "Transmitter housing", option N "Remote, polycarbonate"

A [in]	F [in]	G [in]	N [in]	P [in]	Q [in]
6.97	9.21	3.54	7.76	0.67	0.87

Sensor connection housing

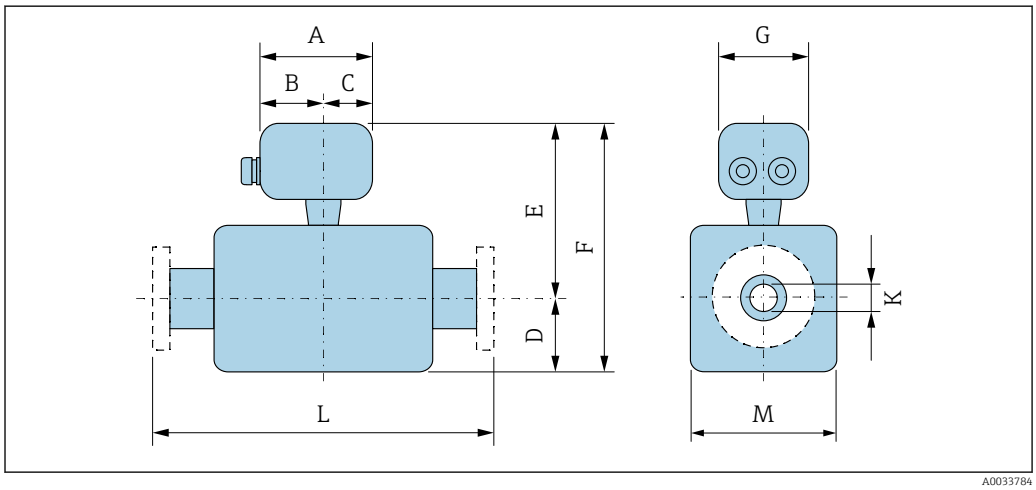

Aluminum, coated

A [in]	B [in]	C [in]	G [in]
5.83	3.7	2.13	5.35

Polycarbonate (only in conjunction with order code for "Sensor option", options CA...CE)

A [in]	B [in]	C [in]	G [in]
4.45	2.44	2.01	4.41

DN 1 to 12 in (25 to 300 mm): Sensor with aluminum half-shell housing

DN		Order code for "Design"									
		Options D, E, H, I				Option C					
		D [1]	E [1]	F [1]	M [1]	D [1]	E [1]	F [1]	M [1]	K	L
[mm]	[in]	[in]	[in]	[in]	[in]	[in]	[in]	[in]	[in]	[in]	[in]
25	1	3.31	7.87	11.18	4.72	–	–	–	–	[2]	7.87
32	–	3.31	7.87	11.18	4.72	–	–	–	–	[2]	7.87
40	1 ½	3.31	7.87	11.18	4.72	–	–	–	–	[2]	7.87
50	2	3.31	7.87	11.18	4.72	3.31	7.87	11.18	4.72	[2]	7.87
65	–	4.29	8.86	13.15	7.09	3.31	7.87	11.18	4.72	[2]	7.87
80	3	4.29	8.86	13.15	7.09	3.31	7.87	11.18	4.72	[2]	7.87
100	4	4.29	8.86	13.15	7.09	4.29	8.86	13.15	7.09	[2]	9.84
125	–	5.91	10.43	16.34	10.24	4.29	8.86	13.15	7.09	[2]	9.84
150	6	5.91	10.43	16.34	10.24	4.29	8.86	13.15	7.09	[2]	11.81
200	8	7.09	11.42	18.5	12.76	5.91	10.43	16.34	10.24	[2]	13.78
250	10	8.07	12.4	20.47	15.75	5.91	10.43	16.34	10.24	[2]	17.72
300	12	9.06	13.39	22.44	18.11	7.09	11.42	18.5	12.76	[2]	19.69

1) The dimensions are reference values. They may vary depending on the pressure rating, design and order option.
2) Depends on the liner → 🖹 91

DN 1 to 12 in (25 to 300 mm): Sensor with fully welded carbon steel housing

DN		Order code for "Design"									
		Option E				Option C					
		D [1]	E [1]	F [1]	M [1]	D [1]	E [1]	F [1]	M [1]	K	L
[mm]	[in]	[mm]	[in]	[in]	[in]	[in]	[in]	[in]	[in]	[in]	[in]
25	1	2.76	7.87	10.63	5.51	–	–	–	–	[2]	7.87
32	–	2.76	7.87	10.63	5.51	–	–	–	–	[2]	7.87
40	1 ½	2.76	7.87	10.63	5.51	–	–	–	–	[2]	7.87
50	2	2.76	7.87	10.63	5.51	2.76	7.87	10.63	5.51	[2]	7.87
65	–	3.23	8.86	12.09	6.5	2.76	7.87	10.63	5.51	[2]	7.87
80	3	3.43	8.86	12.28	6.89	2.76	7.87	10.63	5.51	[2]	7.87
100	4	3.94	8.86	12.8	7.87	3.23	8.86	12.09	6.5	[2]	9.84
125	–	4.45	10.43	14.88	8.9	3.43	8.86	12.28	6.89	[2]	9.84
150	6	5.28	10.43	15.71	10.59	3.94	8.86	12.8	7.87	[2]	11.81
200	8	6.3	11.42	17.72	12.6	4.45	10.43	14.88	8.9	[2]	13.78

DN		Order code for "Design"									
		Option E				Option C					
		D [1]	E [1]	F [1]	M [1]	D [1]	E [1]	F [1]	M [1]	K	L
[mm]	[in]	[mm]	[in]	[in]	[in]	[in]	[in]	[in]	[in]	[in]	[in]
250	10	7.6	12.4	20	15.24	5.28	10.43	15.71	10.59	[2]	17.72
300	12	8.58	13.39	21.97	17.2	6.3	11.42	17.72	12.6	[2]	19.69

1) The dimensions are reference values. They may vary depending on the pressure rating, design and order option.
2) Depends on the liner → 🖹 91

DN 14 to 16 in (350 to 400 mm)

DN		Order code for "Design" Options E, I					
		D [1]	E [1]	F [1]	M [1]	K	L
[mm]	[in]	[in]	[in]	[in]	[in]	[in]	[in]
350	14	11.10	15.63	26.73	22.20	[2]	21.65
375	15	12.13	16.65	28.78	24.25	[2]	23.62
400	16	12.13	16.65	28.78	24.25	[2]	23.62

1) The dimensions are reference values. They may vary depending on the pressure rating, design and order option.
2) Depends on the liner → 🖹 91

DN 18 to 36 in (450 to 900 mm)

DN		Order code for "Design"										
		Options F, J				Options G, K						
		D [1]	E [1]	F [1]	M [1]	D [1]	E [1]	F [1]	M [1]	K	L	
[mm]	[in]	[in]	[in]	[in]	[in]	[in]	[in]	[in]	[in]	[in]	[in]	
450	18	11.42	15.94	27.36	22.83	13.11	17.64	30.75	26.22	[2]	23.62 [3]	25.59 [4]
500	20	12.40	16.93	29.33	24.80	14.13	18.66	32.80	28.23	[2]	23.62 [3]	25.59 [4]
600	24	14.37	18.90	33.27	28.74	16.18	20.71	36.89	32.32	[2]	23.62 [3]	30.71 [4]
700	28	16.77	21.30	38.07	33.50	20.16	24.69	44.84	40.31	[2]	27.56 [3]	35.83 [4]
750	30	18.23	22.76	40.98	36.46	20.16	24.69	44.84	40.31	[2]	29.53 [3]	38.39 [4]
800	32	18.98	23.50	42.48	37.95	21.02	25.55	46.57	41.93	[2]	31.5 [3]	40.94 [4]
900	36	20.94	25.47	46.42	41.89	24.02	28.54	52.56	47.95	[2]	35.43 [3]	46.06 [4]

1) The dimensions are reference values. They may vary depending on the pressure rating, design and order option.
2) Depends on the liner → 🖹 91
3) Order code for "Design", option F "Fixed flange, short installed length" and option J "Fixed flange, short installed length, 0 x DN inlet/outlet runs"
4) Order code for "Design", option G "Fixed flange, long installed length" and option K "Fixed flange, long installed length 0 x DN inlet/outlet runs"

DN 40 to 78 in (1000 to 2000 mm)

DN		Order code for "Design" Options F, G, J, K				K	L	
		D [1]	E [1]	F [1]	M [1]			
[mm]	[in]	[in]	[in]	[in]	[in]	[in]	[in]	
1000	40	22.91	27.44	50.35	45.83	[2]	39.37 [3]	51.18 [4]
–	42	24.33	28.86	53.19	48.66	[2]	41.34 [3]	53.74 [4]
1200	48	27.40	31.93	59.33	54.80	[2]	47.24 [3]	61.42 [4]
–	54	31.85	36.38	68.23	63.66	[2]	53.15 [3]	69.09 [4]
1400	–	31.85	36.38	68.23	63.66	[2]	55.12 [3]	71.65 [4]
–	60	35.79	40.31	76.10	71.54	[2]	59.06 [3]	76.77 [4]
1600	–	35.79	40.31	76.10	71.54	[2]	62.99 [3]	81.89 [4]
–	66	37.80	42.32	80.12	75.55	[2]	64.96 [3]	84.45 [4]
1800	72	40.00	44.53	84.53	80.00	[2]	70.87 [3]	92.13 [4]
–	78	44.37	48.90	93.27	88.74	[2]	78.74 [3]	102.36 [4]
2000	–	44.37	48.90	93.27	88.74	[2]	78.74 [3]	102.36 [4]

1) The dimensions are reference values. They may vary depending on the pressure rating, design and order option.
2) Internal diameter depends on the liner, see the measuring tube specification → 🖹 91
3) Order code for "Design", option F "Fixed flange, short installed length" and option J "Fixed flange, short installed length, 0 x DN inlet/outlet runs"
4) Order code for "Design", option G "Fixed flange, long installed length" and option K "Fixed flange, long installed length 0 x DN inlet/outlet runs"

DN 84 to 120 in (2200 to 3000 mm)

DN		Order code for "Design" Option F, J				K	L
		D [1]	E [1]	F [1]	M [1]		
[mm]	[in]	[in]	[in]	[in]	[in]	[in]	[in]
–	84	48.31	52.83	101.14	96.61	[2]	86.61
2200	–	48.31	52.83	101.14	96.61	[2]	86.61
–	90	52.44	56.97	109.41	104.88	[2]	94.49
2400	–	52.44	56.97	109.57	104.88	[2]	94.49
–	96	56.34	60.87	117.20	112.64	[2]	96.46
–	102	59.69	64.21	123.90	119.37	[2]	102.36
2600	–	56.77	61.30	118.07	113.50	[2]	102.36
–	108	63.07	67.64	130.71	126.14	[2]	108.27
2800	–	60.91	65.43	126.34	121.77	[2]	110.24
–	114	66.46	70.98	137.44	132.87	[2]	114.17
3000	–	64.84	69.37	134.21	129.65	[2]	118.11
–	120	69.84	74.37	144.21	139.65	[2]	120.08

1) The dimensions are reference values. They may vary depending on the pressure rating, design and order option.
2) Internal diameter depends on the liner, see the measuring tube specification → 🖹 91

Flange connections

Fixed flange

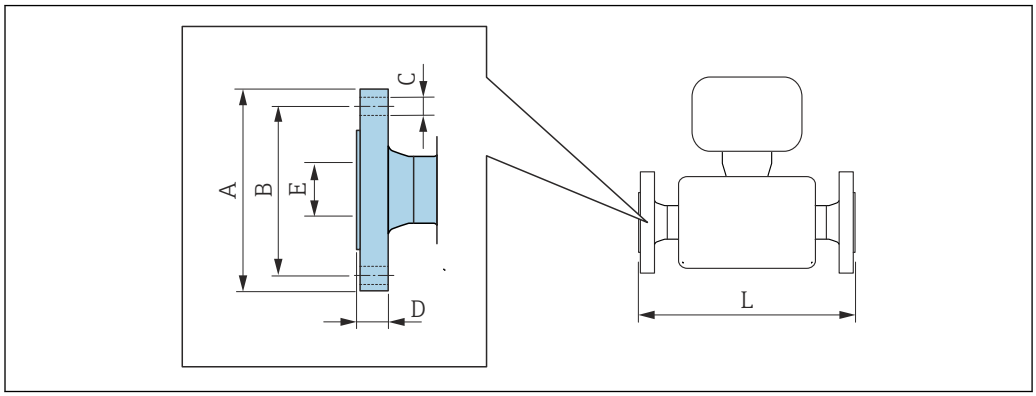

A0015621

Flange according to ASME B16.5, Class 150 **Carbon steel:** *order code for "Process connection", option* **A1K** **Stainless steel:** *order code for "Process connection", option* **A1S**							
DN		**A**	**B**	**C**	**D**	**E**	**L**
[mm]	**[in]**	**[in]**	**[in]**	**[in]**	**[in]**	**[in]**	**[in]**
25	1	4.25	3.12	4 × Ø0.63	0.5	1)	2)
40	1 ½	5	3.88	4 × Ø0.63	0.63		
50	2	6	4.75	4 × Ø0.75	0.69		
80	3	7.5	6	4 × Ø0.75	0.88		
100	4	9	7.5	8 × Ø0.75	0.88		
150	6	11	9.5	8 × Ø0.88	0.94		
200	8	13.5	11.75	8 × Ø0.88	1.06		
250	10	16	14.25	12 × Ø1	1.17		
300	12	19	17	12 × Ø1	1.19		
350	14	21.06	18.75	12 × Ø1.13	1.39		
400	16	23.43	21.25	16 × Ø1.13	1.46		
450	18	25	22.75	16 × Ø1.25	1.58		
500	20	27.56	25	20 × Ø1.25	1.7		
600	24	32.09	29.5	20 × Ø1.37	1.89		
Surface roughness (flange): Ra 250 to 492 µm							

1) Depends on the liner→ 🖹 91
2) Total length is independent of the process connections. Length according to DVGW (German Technical and Scientific Association for Gas and Water) → 🖹 75 (compact version) → 🖹 78 (remote version)

Flange according to ASME B16.5, Class 300 **Carbon steel:** *order code for "Process connection", option* **A2K** **Stainless steel:** *order code for "Process connection", option* **A2S**							
DN		**A**	**B**	**C**	**D**	**E**	**L**
[in]	**[mm]**	**[in]**	**[in]**	**[in]**	**[in]**	**[in]**	**[in]**
1	25	4.88	3.5	4 × Ø0.75	0.63	1)	2)
1 ½	40	6.12	4.5	4 × Ø0.88	0.75		
2	50	6.5	5	8 × Ø0.75	0.82		

Flange according to ASME B16.5, Class 300
Carbon steel: *order code for "Process connection", option* **A2K**
Stainless steel: *order code for "Process connection", option* **A2S**

DN		A	B	C	D	E	L
[in]	[mm]	[in]	[in]	[in]	[in]	[in]	[in]
3	80	8.25	6.62	8 × Ø0.88	1.06		
4	100	10	7.88	8 × Ø0.88	1.19		
6	150	12.5	10.62	12 × Ø0.88	1.38		
Surface roughness (flange): Ra 250 to 492 µm							

1) Depends on the liner→ 🖹 91
2) Total length is independent of the process connections. Length according to DVGW (German Technical and Scientific Association for Gas and Water) → 🖹 75 (compact version) → 🖹 78 (remote version)

Flange according to AWWA, Cl. D
Order code for "Process connection", option **W1K**

DN		A	B	C	D	E	L
[in]	[mm]	[in]	[in]	[in]	[in]	[in]	[in]
28	700	36.50	34.00	28 × Ø1.38	1.31	1)	2)
30	–	38.74	36.00	28 × Ø1.38	1.38		
32	800	41.73	38.50	28 × Ø1.65	1.50		
36	900	45.98	42.75	32 × Ø1.65	1.63		
40	1000	50.75	47.25	36 × Ø1.65	1.63		
42	–	52.99	49.50	36 × Ø1.65	1.75		
48	1200	59.49	56.00	44 × Ø1.65	1.88		
54	–	66.26	62.75	44 × Ø1.89	2.13		
60	–	73.03	69.25	52 × Ø1.89	2.25		
66	–	80.00	76.00	52 × Ø1.89	2.50		
72	1800	86.50	82.50	60 × Ø1.89	2.63		
78	–	92.99	89.00	64 × Ø2.13	2.75		
84	–	99.80	95.50	64 × Ø2.13	2.88		
90	–	106.50	107.00	68 × Ø2.36	3.00		
96	–	113.27	108.50	68 × Ø2.37	3.25		
102	–	120.00	114.50	68 × Ø2.63	3.25		
108	–	126.73	120.75	68 × Ø2.63	3.38		
114	–	133.50	126.75	68 × Ø2.87	3.50		
120	–	140.24	132.75	68 × Ø2.87	3.50		
Surface roughness (flange): Ra 250 to 492 µin							

1) Depends on the liner → 🖹 91
2) Total length is independent of the process connections. Installed length according to DVGW → 🖹 75 (compact version) → 🖹 78 (remote version)

Lap joint flange

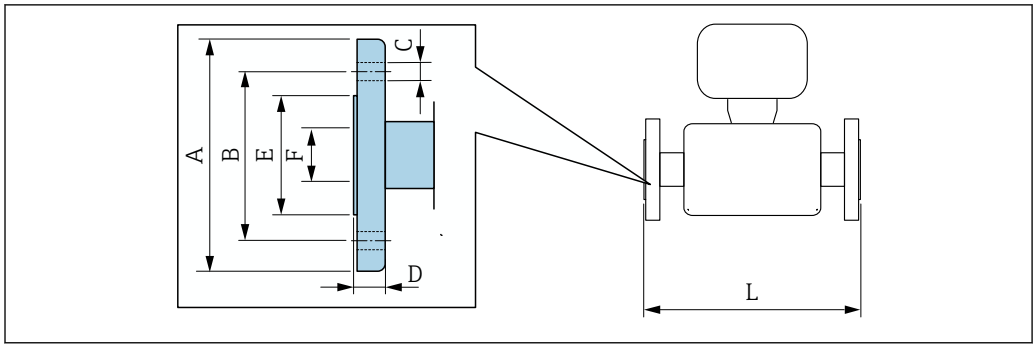

A0037862

Lap joint flange according to ASME B16.5, Class 150 **Carbon steel:** *order code for "Process connection", option* **A12** **Stainless steel:** *order code for "Process connection", option* **A14**								
DN		**A**	**B**	**C**	**D**	**E**	**F**	**L**
[mm]	**[in]**	**[in]**	**[in]**	**[in]**	**[in]**	**[in]**	**[in]**	**[in]**
25	1	4.33	3.15	4 × Ø0.63	0.55	1.93	1)	2)
40	1 ½	4.92	3.86	4 × Ø0.63	0.69	2.8		
50	2	5.91	4.76	4 × Ø0.75	0.75	3.46		
80	3	7.48	5.98	4 × Ø0.75	0.94	4.72		
100	4	9.06	7.48	8 × Ø0.75	0.94	5.83		
150	6	11.02	9.49	8 × Ø0.91	0.98	8.23		
200	8	13.58	11.73	8 × Ø0.91	1.14	10.39		
250	10	15.94	14.25	12 × Ø0.98	1.18	12.48		
300	12	19.09	17.01	12 × Ø0.98	1.26	14.88		
Surface roughness (flange): Ra 248 to 492 µin								

1) Depends on the liner→ 🖹 91
2) Total length is independent of the process connections. Length according to DVGW (German Technical and Scientific Association for Gas and Water) → 🖹 75 (compact version) → 🖹 78 (remote version)

Accessories

Weather protection cover

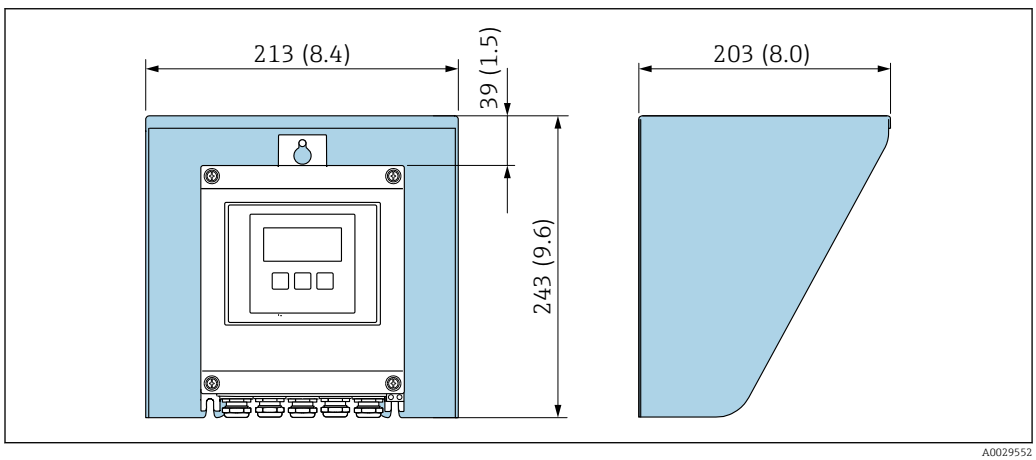

A0029552

🖼 32 *Weather protection cover; engineering unit mm (in)*

Ground disks for flange connections

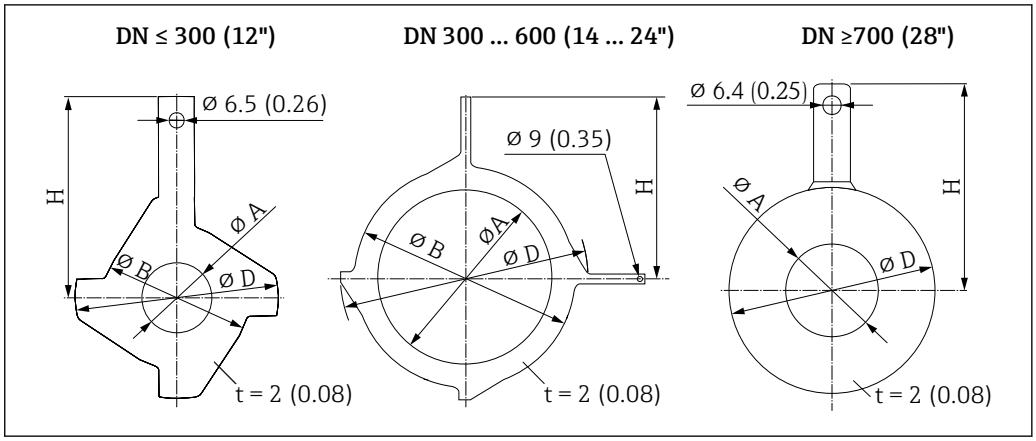

DN		Pressure rating	A		B		D		H	
[mm]	[inch]		[mm]	[inch]	[mm]	[inch]	[mm]	[inch]	[mm]	[inch]
25	1"	[1]	26	1.02	62	2.44	77.5	3.05	87.5	3.44
32	1 ¼"	[1]	35	1.38	80	3.15	87.5	3.44	94.5	3.72
40	1 ½"	[1]	41	1.61	82	3.23	101	3.98	103	4.06
50	2"	[1]	52	2.05	101	3.98	115.5	4.55	108	4.25
65	2 ½"	[1]	68	2.68	121	4.76	131.5	5.18	118	4.65
80	3"	[1]	80	3.15	131	5.16	154.5	6.08	135	5.31
100	4"	[1]	104	4.09	156	6.14	186.5	7.34	153	6.02
125	5"	[1]	130	5.12	187	7.36	206.5	8.13	160	6.30
150	6"	[1]	158	6.22	217	8.54	256	10.08	184	7.24
200	8"	[1]	206	8.11	267	10.51	288	11.34	205	8.07
250	10"	[1]	260	10.2	328	12.91	359	14.13	240	9.45
300	12"	PN 10 PN 16 Cl. 150	312	12.3	375	14.76	413	16.26	273	10.75
		PN 25 JIS 10K JIS 20K	310	12.2	375	14.76	404	15.91	268	10.55
350	14"	PN 6	343	13.5	420	16.54	479	18.86	365	14.37
		PN 10								
		PN 16								
375	15"	PN 16	393	15.5	461	18.2	523	20.6	395	15.6
400	16"	PN 6	393	15.5	470	18.50	542	21.34	395	15.55
		PN 10								
		PN 16								
450	18"	PN 6	439	17.3	525	20.67	583	22.95	417	16.42
		PN 10								
		PN 16								
500	20"	PN 6	493	19.4	575	22.64	650	25.59	460	18.11
		PN 10								
		PN 16								

DN		Pressure rating	A		B		D		H	
[mm]	[inch]		[mm]	[inch]	[mm]	[inch]	[mm]	[inch]	[mm]	[inch]
600	24"	PN 6	593	23.3	676	26.61	766	30.16	522	20.55
		PN 10								
		PN 16								
700	28"	PN 6	697	27.4	–	–	786	30.94	460	18.11
		PN10	693	27.3	–	–	813	32.01	480	18.9
		PN16	687	27.1	–	–	807	31.77	490	19.29
		Cl, D	693	27.3	–	–	832	32.76	494	19.45
750	30"	Cl, D	743	29.3	–	–	883	34.76	523	20.59
800	32"	PN 6	799	31.5	–	–	893	35.16	520	20.47
		PN 10	795	31.3	–	–	920	36.22	540	21.26
		PN 16	789	31.1	–	–	914	35.98	550	21.65
		Cl, D	795	31.3	–	–	940	37.01	561	22.09
900	36"	PN 6	897	35.3	–	–	993	39.09	570	22.44
		PN 10	893	35.2	–	–	1020	40.16	590	23.23
		PN 16	886	34.9	–	–	1014	39.92	595	23.43
		Cl, D	893	35.2	–	–	1048	41.26	615	24.21
1000	40"	PN 6	999	39.3	–	–	1093	43.03	620	24.41
		PN 10	995	39.2	–	–	1127	44.37	650	25.59
		PN 16	988	38.9	–	–	1131	44.53	660	25.98
		Cl, D	995	39.2	–	–	1163	45.79	675	26.57
–	42"	Cl, D	1044	41.1	–	–	1220	48.03	704	27.72
1200	48"	PN 6	1203	47.4	–	–	1310	51.57	733	28.86
		PN 10	1196	47.1	–	–	1344	52.91	760	29.92
		PN 16	1188	46.8	–	–	1345	52.95	775	30.51
		Cl, D	1196	47.1	–	–	1385	54.53	786	30.94

1) In the case of DN 25 to 250, ground disks can be used for all the flange standards/pressure ratings which can be supplied in the standard version

Weight

All values (weight exclusive of packaging material) refer to devices with flanges of the standard pressure rating.
The weight may be lower than indicated depending on the pressure rating and design.

Weight in SI units

Order code for "Design", option C, D, E, H, I : DN 25 to 400 mm (1 to 16 in)			
Nominal diameter		Reference values EN (DIN), AS, JIS	
[mm]	[in]	Pressure rating	[kg]
25	1	PN 40	10
32	–	PN 40	11
40	1 ½	PN 40	12
50	2	PN 40	13
65	–	PN 16	13
80	3	PN 16	15
100	4	PN 16	18
125	–	PN 16	25
150	6	PN 16	31
200	8	PN 10	52
250	10	PN 10	81
300	12	PN 10	95
350	14	PN 6	106
375	15	PN 6	121
400	16	PN 6	121

Order code for "Design", option F, J: DN 450 to 2 000 mm (18 to 78 in)			
		Reference values	
Nominal diameter		EN (DIN) (PN16)	AS (PN 16)
[mm]	[in]	[kg]	[kg]
450	18	142	138
500	20	182	186
600	24	227	266
700	28	291	369
–	30	–	447
800	32	353	524
900	36	444	704
1000	40	566	785
–	42	–	–
1200	48	843	1229
–	54	–	–
1400	–	1204	–
–	60	–	–
1600	–	1845	–
–	66	–	–

Order code for "Design", option F, J: DN 450 to 2 000 mm (18 to 78 in)			
		Reference values	
Nominal diameter		EN (DIN) (PN16)	AS (PN 16)
[mm]	[in]	[kg]	[kg]
1800	72	2 357	–
–	78	2 929	–
2000	–	2 929	–

Order code for "Design", option F, J: DN 2 200 to 3 000 mm (84 to 120 in)		
		Reference values
Nominal diameter		EN (DIN) (PN6)
[mm]	[in]	[kg]
–	84	–
2200	–	3 422
–	90	–
2400	–	4 094
–	96	–
–	102	–
2600	–	7 601.5
–	108	–
2800	–	9 466.5
–	114	–
3000	–	11 911
–	120	–

Order code for "Design", option G, K: DN 450 to 2 000 mm (18 to 78 in)		
		Reference values
Nominal diameter		EN (DIN) (PN 6)
[mm]	[in]	[kg]
450	18	161
500	20	156
600	24	208
700	28	304
–	30	–
800	32	357
900	36	485
1000	40	589
–	42	–
1200	48	850
–	54	850
1400	–	1 300
–	60	–
1600	–	1 845

Order code for "Design", option G, K: DN 450 to 2 000 mm (18 to 78 in)		
Nominal diameter		Reference values EN (DIN) (PN 6)
[mm]	[in]	[kg]
–	66	–
1800	72	2 357
–	78	2 929
2000	–	2 929

Weight in US units

Order code for "Design", option C, D, E, H, I: DN 1 to 16 in (25 to 400 mm)		
Nominal diameter		Reference values ASME (Class 150)
[mm]	[in]	[lb]
25	1	11
32	–	–
40	1 ½	15
50	2	20
65	–	–
80	3	31
100	4	42
125	–	–
150	6	73
200	8	115
250	10	198
300	12	284
350	14	379
375	15	–
400	16	448

Order code for "Design", option F, J: DN 18 to 120 in (450 to 3 000 mm)		
Nominal diameter		Reference values ASME (Class 150), AWWA (Class D)
[mm]	[in]	[lb]
450	18	421
500	20	503
600	24	666
700	28	587
–	30	701
800	32	845
900	36	1036
1000	40	1294
–	42	1477
1200	48	1987

Order code for "Design", option F, J: DN 18 to 120 in (450 to 3 000 mm)		
Nominal diameter		Reference values ASME (Class 150), AWWA (Class D)
[mm]	[in]	[lb]
–	54	2807
1400	–	–
–	60	3515
1600	–	–
–	66	4699
1800	72	5662
–	78	6864
2000	–	6864
–	84	8280
2200	–	–
–	90	10577
2400	–	–
–	96	15574.6
–	102	18023.9
2600	–	–
–	108	20783.0
2800	–	–
–	114	24060.2
3000	–	–
–	120	27724.3

Order code for "Design", option G, K: DN 18 to 78 in (450 to 2 000 mm)		
Nominal diameter		Reference values ASME (Class 150), AWWA (Class D)
[mm]	[in]	[lb]
450	18	562
500	20	628
600	24	893
700	28	882
–	30	1014
800	32	1213
900	36	1764
1000	40	1984
–	42	2426
1200	48	3087
–	54	4851
1400	–	–
–	60	5954
1600	–	–
–	66	8158

Order code for "Design", option G, K: DN 18 to 78 in (450 to 2 000 mm)		
Nominal diameter		Reference values ASME (Class 150), AWWA (Class D)
[mm]	[in]	[lb]
1800	72	9 040
–	78	10 143
2000	–	–

Measuring tube specification

The values are reference values and can vary depending on the pressure rating, design and order option.

Nominal diameter		Pressure rating				Measuring tube internal diameter					
		EN (DIN)	ASME AWWA	AS 2129 AS 4087	JIS	Hard rubber		Polyurethane		PTFE	
[mm]	[in]					[mm]	[in]	[mm]	[in]	[mm]	[in]
25	1	PN 40	Class 150	–	20K	–	–	24	0.93	25	1.00
32	–	PN 40	–	–	20K	–	–	32	1.28	34	1.34
40	1 ½	PN 40	Class 150	–	20K	–	–	38	1.51	40	1.57
50	2	PN 40	Class 150	Table E, PN 16	10K	50	1.98	50	1.98	52	2.04
50 [1]	2	PN 40	Class 150	Table E, PN 16	10K	32	1.26	–	–	–	–
65	–	PN 16	–	–	10K	66	2.60	66	2.60	68	2.67
65 [1]	–	PN 16	–	–	10K	38	1.50	–	–	–	–
80	3	PN 16	Class 150	Table E, PN 16	10K	79	3.11	79	3.11	80	3.15
80 [1]	3	PN 16	Class 150	Table E, PN 16	10K	50	1.97	–	–	–	–
100	4	PN 16	Class 150	Table E, PN 16	10K	101	3.99	104	4.11	104	4.09
100 [1]	4	PN 16	Class 150	Table E, PN 16	10K	66	2.60	–	–	–	–
125	–	PN 16	–	–	10K	127	4.99	130	5.11	129	5.08
125 [1]	–	PN 16	–	–	10K	79	3.11	–	–	–	–
150	6	PN 16	Class 150	Table E, PN 16	10K	155	6.11	158	6.23	156	6.15
150 [1]	6	PN 16	Class 150	Table E, PN 16	10K	102	4.02	–	–	–	–
200	8	PN 10	Class 150	Table E, PN 16	10K	204	8.02	207	8.14	202	7.96
200 [1]	8	PN 16	Class 150	Table E, PN 16	10K	127	5.00	–	–	–	–
250	10	PN 10	Class 150	Table E, PN 16	10K	258	10.14	261	10.26	256	10.09
250 [1]	10	PN 16	Class 150	Table E, PN 16	10K	156	6.14	–	–	–	–
300	12	PN 10	Class 150	Table E, PN 16	10K	309	12.15	312	12.26	306	12.03
300 [1]	12	PN 16	Class 150	Table E, PN 16	10K	204	8.03	–	–	–	–
350	14	PN 10	Class 150	Table E, PN 16	10K	337	13.3	340	13.4	–	–
375	15	–	–	PN 16	10K	389	15.3	392	15.4	–	–
400	16	PN 10	Class 150	Table E, PN 16	10K	387	15.2	390	15.4	–	–
450	18	PN 10	Class 150	–	10K	436	17.2	439	17.3	–	–
500	20	PN 10	Class 150	Table E, PN 16	10K	487	19.2	490	19.3	–	–
600	24	PN 10	Class 150	Table E, PN 16	10K	585	23.0	588	23.1	–	–
700	28	PN 10	Class D	Table E, PN 16	10K	694	27.3	697	27.4	–	–
750	30	–	Class D	Table E, PN 16	10K	743	29.3	746	29.4	–	–
800	32	PN 10	Class D	Table E, PN 16	–	794	31.3	797	31.4	–	–

Nominal diameter		Pressure rating				Measuring tube internal diameter					
		EN (DIN)	ASME AWWA	AS 2129 AS 4087	JIS	Hard rubber		Polyurethane		PTFE	
[mm]	[in]					[mm]	[in]	[mm]	[in]	[mm]	[in]
900	36	PN 10	Class D	Table E, PN 16	–	895	35.2	898	35.4	–	–
1000	40	PN 6	Class D	Table E, PN 16	–	991	39.0	994	39.1	–	–
–	42	–	Class D	–	–	1 043	41.1	1 043	41.1	–	–
1200	48	PN 6	Class D	Table E, PN 16	–	1 191	46.9	1 197	47.1	–	–
–	54	–	Class D	–	–	1 339	52.7	–	–	–	–
1400	–	PN 6	–	–	–	1 402	55.2	–	–	–	–
–	60	–	Class D	–	–	1 492	58.7	–	–	–	–
1600	–	PN 6	–	–	–	1 600	63.0	–	–	–	–
–	66	–	Class D	–	–	1 638	64.5	–	–	–	–
1800	72	PN 6	–	–	–	1 786	70.3	–	–	–	–
–	78	–	Class D	–	–	1 989	78.3	–	–	–	–
2000	–	PN 6	–	–	–	1 989	78.3	–	–	–	–
–	84	–	Class D	–	–	2 099	84.0	–	–	–	–
2200	–	PN 6	–	–	–	2 194	87.8	–	–	–	–
–	90	–	Class D	–	–	2 246	89.8	–	–	–	–
2400	–	PN 6	–	–	–	2 391	94.1	–	–	–	–
–	96	–	Class D	–		2 382	93.8	–	–	–	–
–	102	–	Class D	–		2 533	99.7	–	–	–	–
2600	–	PN 6	–	–		2 580	101.6	–	–	–	–
–	108	–	Class D	–		2 683	105.6	–	–	–	–
2800	–	PN 6	–	–		2 780	109.5	–	–	–	–
–	114	–	Class D	–		2 832	111.5	–	–	–	–
3000	–	PN 6	–	–		2 976	117.2	–	–	–	–
–	120	–	Class D	–		2 980	117.3	–	–	–	–

1) Order code for "Design", option C

Materials

Transmitter housing

Compact version

- Order code for "Housing", option **A** "Compact, alu, coated": Aluminum, AlSi10Mg, coated
- Order code for "Housing", option **M**: polycarbonate plastic
- Window material:
  - For order code for "Housing", option **A**: glass
  - For order code for "Housing", option **M**: plastic

Remote version (wall-mount housing)

- Order code for "Housing", option **P** "Remote, alu, coated": Aluminum, AlSi10Mg, coated
- Order code for "Housing", option **N**: polycarbonate plastic
- Window material:
  - For order code for "Housing", option **P**: glass
  - For order code for "Housing", option **N**: plastic

Sensor connection housing

- Aluminum, AlSi10Mg, coated
- Polycarbonate plastic (only in conjunction with order code for "Sensor option", options CA, C3, CB, CC, CD, CD)

Cable entries/cable glands

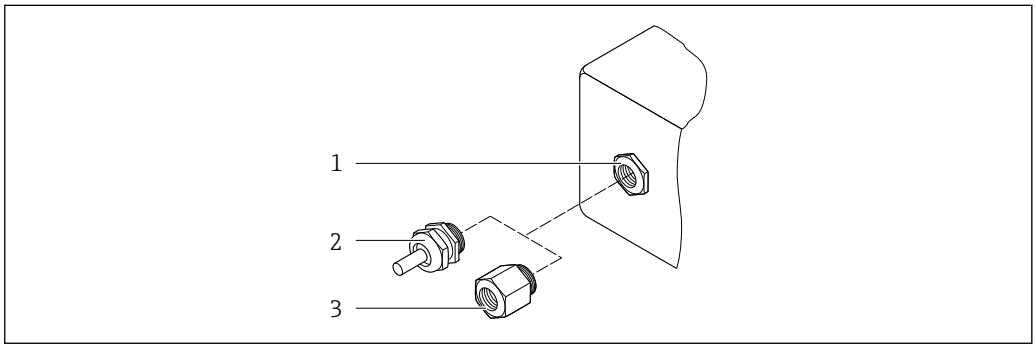

33 *Possible cable entries/cable glands*

1 Internal thread M20 × 1.5
2 Cable gland M20 × 1.5
3 Adapter for cable entry with internal thread G ½" or NPT ½"

Compact and remote versions and sensor connection housing

Cable entry/cable gland	Material
Cable gland M20 × 1.5	▪ Plastic ▪ Nickel-plated brass
Remote version: cable gland M20 × 1.5 Option of armored connecting cable	▪ Sensor connection housing: Nickel-plated brass ▪ Transmitter wall-mount housing: Plastic
Adapter for cable entry with female thread G ½" or NPT ½"	Nickel-plated brass

Device plug

Electrical connection	Material
Plug M12x1	▪ Socket: Stainless steel, 1.4404 (316L) ▪ Contact housing: Polyamide ▪ Contacts: Gold-plated brass

Connecting cable of remote version

UV rays can impair the cable outer sheath. Protect the cable from exposure to sun as much as possible.

Electrode and coil current cable:
- Standard cable: PVC cable with copper shield
- Armored cable: PVC cable with copper shield and additional steel wire braided jacket

Sensor housing

- DN 25 to 300 (1 to 12")
  - Aluminum half-shell housing, aluminum, AlSi10Mg, coated
  - Fully welded carbon steel housing with protective varnish
- DN 350 to 3000900 (14 to 12036")
  Fully welded carbon steel housing with protective varnish

Measuring tubes

- DN 25 to 600 (1 to 24")
  Stainless steel: 1.4301, 1.4306, 304, 304L
- DN 700 to (28 to ")
  Stainless steel: 1.4301, 304, S30408, or equivalent

Liner

- DN 25 to 300 (1 to 12"): PTFE
- DN 25 to 1200 (1 to 48"): polyurethane
- DN 50 to 3000 (2 to 120"): hard rubber

Electrodes

- Stainless steel, 1.4435 (316L)
- Alloy C22, 2.4602 (UNS N06022)
- Tantalum

Process connections

For flanges made of carbon steel:
- DN ≤ 300 (12"): with Al/Zn protective coating or protective varnish
- DN ≥ 350 (14"): protective varnish

All carbon steel lap joint flanges are supplied with a hot-dip galvanized finish.

EN 1092-1 (DIN 2501)

Fixed flange
- Carbon steel:
  - DN ≤ 300: S235JRG2, S235JR+N, P245GH, A105, E250C
  - DN 350 to 3000: P245GH, S235JRG2, A105, E250C
- Stainless steel:
  - DN ≤ 300: 1.4404, 1.4571, F316L
  - DN 350 to 600: 1.4571, F316L, 1.4404
  - DN 700 to 1000: 1.4404, F316L

Lap joint flange
- Carbon steel DN ≤ 300: S235JRG2, A105, E250C
- Stainless steel DN ≤ 300: 1.4306,1.4404, 1.4571, F316L

Lap joint flange, stamped plate
- Carbon steel DN ≤ 300: S235JRG2 similar to S235JR+AR or 1.0038
- Stainless steel DN ≤ 300: 1.4301 similar to 304

ASME B16.5

Fixed flange, lap joint flange
- Carbon steel: A105
- Stainless steel: F316L

JIS B2220

- Carbon steel: A105, A350 LF2
- Stainless steel: F316L

AWWA C207

Carbon steel: A105, P265GH, A181 Class 70, E250C, S275JR

AS 2129

Carbon steel: A105, P235GH, P265GH

AS 4087

Carbon steel: A105, P265GH, S275JR

Seals

As per DIN EN 1514-1, form IBC

Accessories

Display guard

Stainless steel, 1.4301 (304L)

Ground disks

- Stainless steel, 1.4435 (316L)
- Alloy C22, 2.4602 (UNS N06022)
- Tantalum

Fitted electrodes

Measurement, reference and empty pipe detection electrodes available as standard with:
- 1.4435 (316L)
- Alloy C22, 2.4602 (UNS N06022)
- Tantalum

Process connections

- EN 1092-1 (DIN 2501)
- ASME B16.5
- JIS B2220
- AS 2129 Table E
- AS 4087 PN 16
- AWWA C207 Class D

For information on the different materials used in the process connections → 94

Surface roughness

Electrodes with 1.4435 (316L); Alloy C22, 2.4602 (UNS N06022); tantalum: < 0.5 µm (19.7 µin)

(All data relate to parts in contact with medium)

Display and user interface

Operation concept

Operator-oriented menu structure for user-specific tasks
- Commissioning
- Operation
- Diagnosis
- Expert level

Quick and safe commissioning
- Guided menus ("Make-it-run" wizards) for applications
- Menu guidance with brief descriptions of the individual parameter functions
- Access to the device via web server
- WLAN access to the device via mobile handheld terminal, tablet or smart phone

Reliable operation
- Operation in local language
- Uniform operating philosophy applied to device and operating tools
- If replacing electronic modules, transfer the device configuration via the integrated memory (HistoROM backup) which contains the process and measuring device data and the event logbook. No need to reconfigure.

Efficient diagnostics increase measurement reliability
- Troubleshooting measures can be called up via the device and in the operating tools
- Diverse simulation options, logbook for events that occur and optional line recorder functions

Languages

Can be operated in the following languages:
- Via local operation:
  English, German, French, Spanish, Italian, Dutch, Portuguese, Polish, Russian, Turkish, Chinese, Japanese, Bahasa (Indonesian), Vietnamese, Czech, Swedish
- Via "FieldCare", "DeviceCare" operating tool:
  English, German, French, Spanish, Italian, Chinese, Japanese
- Via Web browser (only available for device versions with HART, PROFIBUS DP and EtherNet/IP):
  English, German, French, Spanish, Italian, Dutch, Portuguese, Polish, Russian, Turkish, Chinese, Japanese, Bahasa (Indonesian), Vietnamese, Czech, Swedish

Onsite operation

Via display module

Features:
- Standard features 4-line, illuminated, graphic display; touch control
- Order code for "Display; operation", option BA "WLAN" offers standard equipment features in addition to access via web browser

Information about WLAN interface → 99

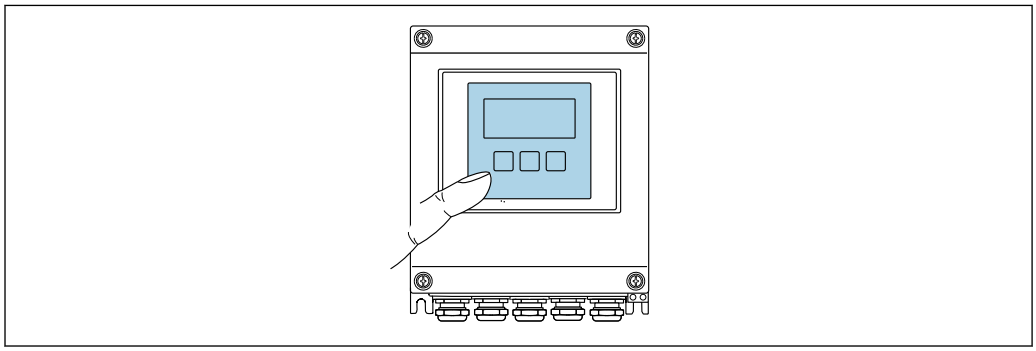

34 *Operation with touch control*

Display elements

- 4-line, illuminated, graphic display
- White background lighting; switches to red in event of device errors
- Format for displaying measured variables and status variables can be individually configured

Operating elements

- External operation via touch control (3 optical keys) without opening the housing: ⊞, ⊟, E
- Operating elements also accessible in the various zones of the hazardous area

Remote operation

Via HART protocol

This communication interface is available in device versions with a HART output.

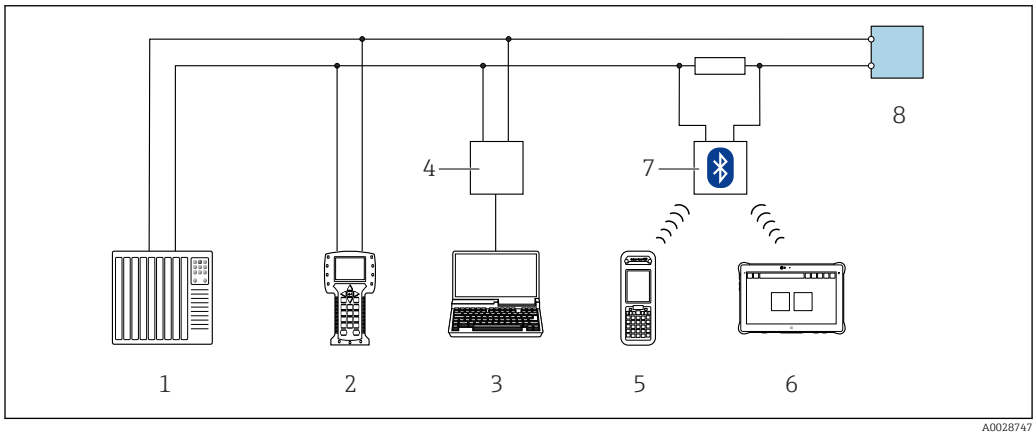

35 *Options for remote operation via HART protocol*

1 *Control system (e.g. PLC)*
2 *Field Communicator 475*
3 *Computer with operating tool (e.g. FieldCare, AMS Device Manager, SIMATIC PDM)*
4 *Commubox FXA195 (USB)*
5 *Field Xpert SFX350 or SFX370*
6 *Field Xpert SMT70*
7 *VIATOR Bluetooth modem with connecting cable*
8 *Transmitter*

Via PROFIBUS DP network

This communication interface is available in device versions with PROFIBUS DP.

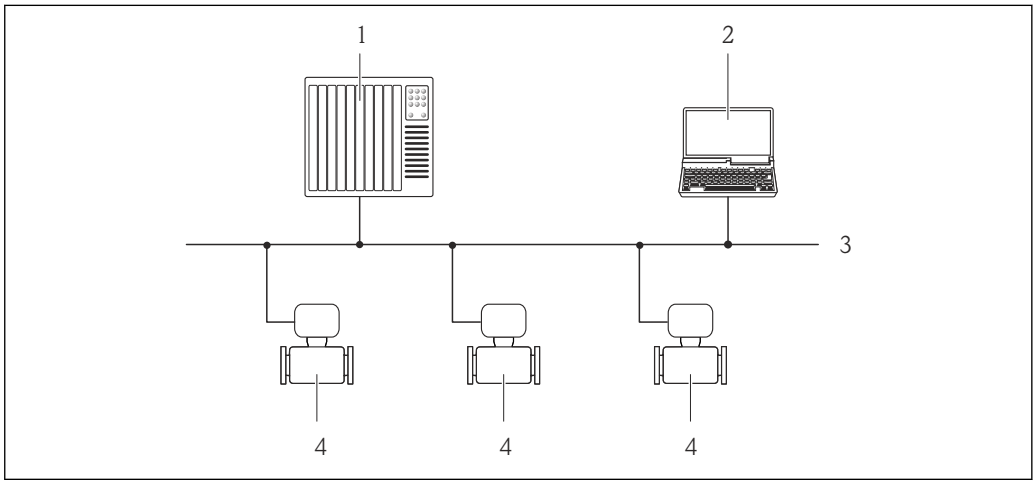

36 *Options for remote operation via PROFIBUS DP network*

1 *Automation system*
2 *Computer with PROFIBUS network card*
3 *PROFIBUS DP network*
4 *Measuring device*

Via Modbus RS485 protocol

This communication interface is available in device versions with a Modbus RS485 output.

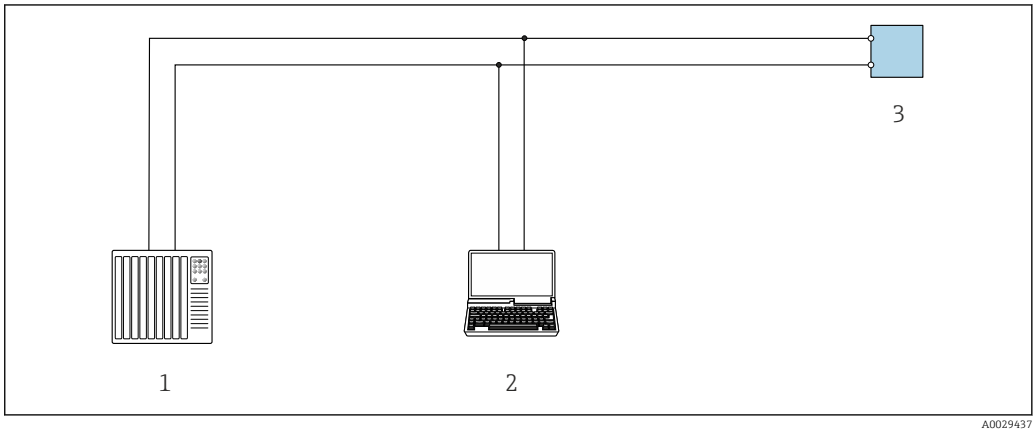

37 *Options for remote operation via Modbus RS485 protocol (active)*

1 *Control system (e.g. PLC)*
2 *Computer with web browser (e.g. Microsoft Edge) to access the integrated device web server or with operating tool (e.g. FieldCare, DeviceCare) with COM DTM "CDI Communication TCP/IP" or Modbus DTM*
3 *Transmitter*

Via EtherNet/IP network

This communication interface is available in device versions with EtherNet/IP.

Star topology

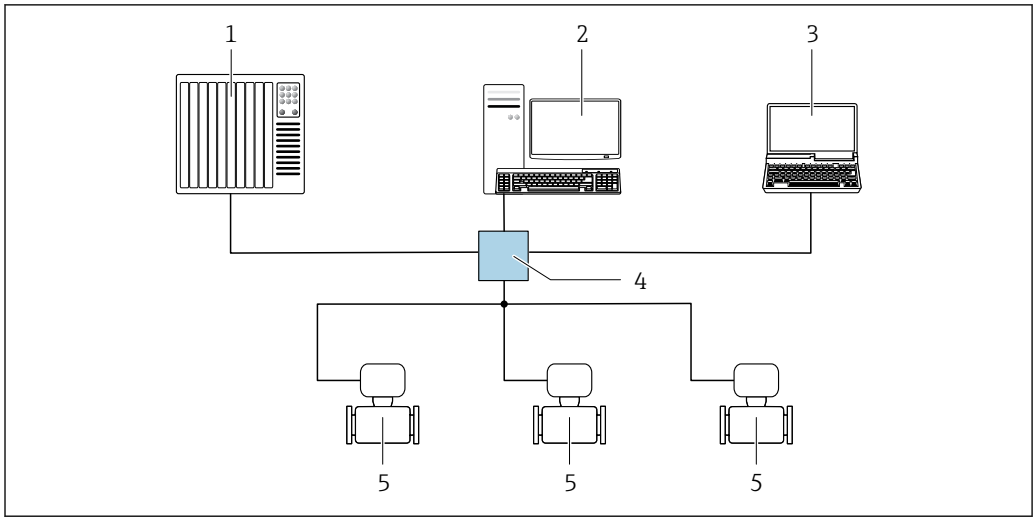

38 Options for remote operation via EtherNet/IP network: star topology

1 *Automation system, e.g. "RSLogix" (Rockwell Automation)*
2 *Workstation for measuring device operation: with Custom Add-On Profile for "RSLogix 5000" (Rockwell Automation) or with Electronic Data Sheet (EDS)*
3 *Computer with Web browser (e.g. Internet Explorer) for accessing the integrated Web server or computer with operating tool (e.g. FieldCare, DeviceCare) with COM DTM "CDI Communication TCP/IP"*
4 *Standard Ethernet switch, e.g. Scalance X204 (Siemens)*
5 *Measuring device*

Service interface

Via service interface (CDI-RJ45)

This communication interface is present in the following device version:
- Order code for "Output", option **H**: 4 to 20 mA HART, pulse/frequency output, switch output
- Order code for "Output", option **I**: 4 to 20 mA HART, 2 x pulse/frequency/switch output, status input
- Order code for "Output", option **J**: 4 to 20 mA HART, certified pulse output, switch output; status input
- Order code for "Output", option **L**: PROFIBUS DP
- Order code for "Output", option **M**: Modbus RS485
- Order code for "Output", option **O**: Modbus RS485, 4 to 20 mA, 2 x pulse/frequency/switch output
- Order code for "Output", option **P**: Modbus RS485, 4 to 20 mA, certified pulse output, pulse/frequency/switch output
- Order code for "Output", option **N**: Ethernet/IP

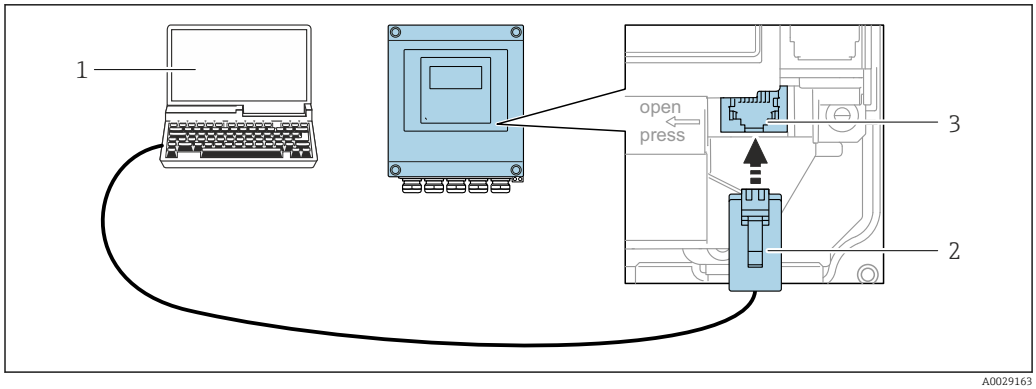

39 Connection via service interface (CDI-RJ45)

1 *Computer with web browser (e.g. Microsoft Internet Explorer, Microsoft Edge) for accessing the integrated device web server or with operating tool "FieldCare", "DeviceCare" with COM DTM "CDI Communication TCP/IP" or Modbus DTM*
2 *Standard Ethernet connecting cable with RJ45 plug*
3 *Service interface (CDI-RJ45) of the measuring device with access to the integrated web server*

Via WLAN interface

The optional WLAN interface is available on the following device version:
Order code for "Display", option BA "WLAN":
4-line, illuminated, graphic display; touch control + WLAN

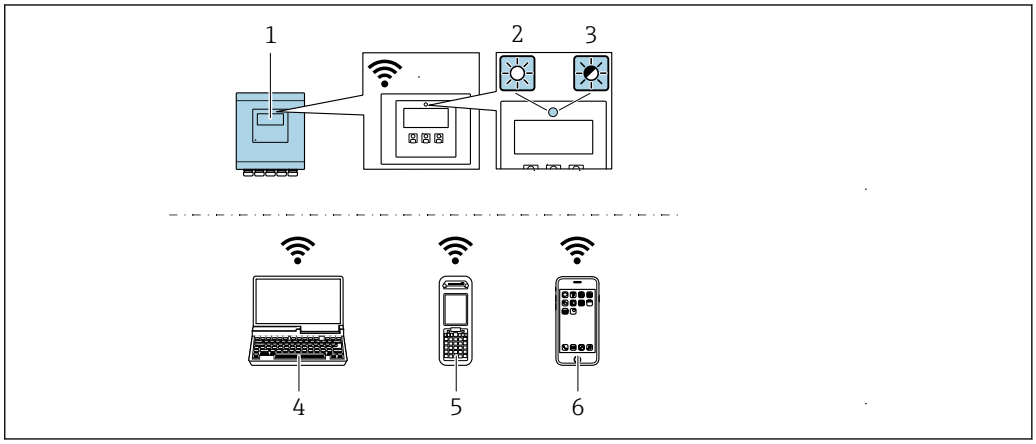

A0043149

1 *Transmitter with integrated WLAN antenna*
2 *LED lit constantly: WLAN reception is enabled on measuring device*
3 *LED flashing: WLAN connection established between operating unit and measuring device*
4 *Computer with WLAN interface and web browser (e.g. Microsoft Internet Explorer, Microsoft Edge) for accessing the integrated device web server or with operating tool (e.g. FieldCare, DeviceCare)*
5 *Mobile handheld terminal with WLAN interface and web browser (e.g. Microsoft Internet Explorer, Microsoft Edge) for accessing the integrated device web server or operating tool (e.g. FieldCare, DeviceCare)*
6 *Smart phone or tablet (e.g. Field Xpert SMT70)*

Function	WLAN: IEEE 802.11 b/g (2.4 GHz) ▪ Access Point with DHCP server (factory setting) ▪ Network
Encryption	WPA2-PSK AES-128 (in accordance with IEEE 802.11i)
Configurable WLAN channels	1 to 11
Degree of protection	IP67
Available antenna	Internal antenna
Range	Typically 10 m (32 ft)

Supported operating tools

Different operating tools can be used for local or remote access to the measuring device. Depending on the operating tool used, access is possible with different operating units and via a variety of interfaces.

Supported operating tools	Operating unit	Interface	Additional information
Web browser	Notebook, PC or tablet with web browser	▪ CDI-RJ45 service interface ▪ WLAN interface ▪ Ethernet-based fieldbus (EtherNet/IP)	Special Documentation for device
DeviceCare SFE100	Notebook, PC or tablet with Microsoft Windows system	▪ CDI-RJ45 service interface ▪ WLAN interface ▪ Fieldbus protocol	→ 🖹 106
FieldCare SFE500	Notebook, PC or tablet with Microsoft Windows system	▪ CDI-RJ45 service interface ▪ WLAN interface ▪ Fieldbus protocol	→ 🖹 106

Supported operating tools	Operating unit	Interface	Additional information
Field Xpert	SMT70/77/50	▪ All Fieldbus protocols ▪ WLAN interface ▪ Bluetooth ▪ CDI-RJ45 service interface	Operating Instructions BA01202S Device description files: Use update function of handheld terminal
SmartBlue app	Smart phone or tablet with iOs or Android	WLAN	→ 🖹 106

Other operating tools based on FDT technology with a device driver such as DTM/iDTM or DD/EDD can be used for device operation. These operating tools are available from the individual manufacturers. Integration into the following operating tools, among others, is supported:

Web server

With the integrated web server, the device can be operated and configured via a web browser and via the service interface (CDI-RJ45) or WLAN interface. The structure of the operating menu is the same as for the local display. In addition to the measured values, status information on the device is displayed and can be used to monitor device health. Furthermore the device data can be managed and the network parameters can be configured.

A device that has a WLAN interface (can be ordered as an option) is required for the WLAN connection: order code for "Display", option BA "WLAN". The device acts as an access point and enables communication by computer or a mobile handheld terminal.

Supported functions
Data exchange between the operating unit (such as a notebook, for example,) and measuring device:
- Upload the configuration from the measuring device (XML format, configuration backup)
- Save the configuration to the measuring device (XML format, restore configuration)
- Export event list (.csv file)
- Export parameter settings (.csv file or PDF file, document the measuring point configuration)
- Export the Heartbeat verification report (PDF file, only available with the **Heartbeat Verification** → 🖹 104 application package)
- Flash firmware version for device firmware upgrade, for example
- Download driver for system integration
- Visualize up to 1000 saved measured values (only available with the **Extended HistoROM** application package→ 🖹 104)

HistoROM data management

The measuring device features HistoROM data management. HistoROM data management comprises both the storage and import/export of key device and process data, making operation and servicing far more reliable, secure and efficient.

Additional information on the data storage concept

There are different types of data storage units in which device data are stored and used by the device:

	HistoROM backup	T-DAT	S-DAT

Available data	▪ Event logbook, e.g. diagnostic events
	▪ Device firmware package
	▪ Driver for system integration for exporting via web server, e.g.:
	  ▪ GSD for PROFIBUS DP
	  ▪ EDS for EtherNet/IP
		▪ Measured value logging ("Extended HistoROM" order option)
		▪ Current parameter data record (used by firmware at run time)
		▪ Indicator (minimum/maximum values)
		▪ Totalizer value
			▪ Sensor data: e.g. nominal diameter
			▪ Serial number
			▪ Calibration data
			▪ Device configuration (e.g. SW options, fixed I/O or multi I/O)

Storage location	Fixed on the user interface PC board in the connection compartment	Can be plugged into the user interface PC board in the connection compartment	In the sensor plug in the transmitter neck part

Data backup

Automatically
- The most important device data (sensor and transmitter) are automatically saved in the DAT modules.
- If the transmitter or measuring device is replaced: Once the T-DAT containing the previous device data has been exchanged, the new measuring device goes into operation immediately, without any errors.
- If the sensor is replaced: Once the S-DAT has been replaced with new device data, the measuring device goes into operation immediately, without any errors.

Data transmission

Manual
- Transfer of a device configuration to another device using the export function of the specific operating tool, e.g. with FieldCare, DeviceCare or Web server: to duplicate the configuration or to store in an archive (e.g. for backup purposes)
- Transmission of the drivers for system integration via Web server, e.g.:
  - GSD for PROFIBUS DP
  - EDS for EtherNet/IP

Event list

Automatic
- Chronological display of up to 20 event messages in the events list
- If the **Extended HistoROM** application package (order option) is enabled: up to 100 event messages are displayed in the events list along with a time stamp, plain text description and remedial measures
- The events list can be exported and displayed via a variety of interfaces and operating tools e.g. DeviceCare, FieldCare or Web server

Data logging

Manual
If the **Extended HistoROM** application package (order option) is enabled:
- Recording of 1 to 4 channels of up to 1 000 measured values (up to 250 measured values per channel)
- User configurable recording interval
- Export the measured value log via a variety of interfaces and operating tools e.g. FieldCare, DeviceCare or web server

Certificates and approvals

Current certificates and approvals for the product are available at www.endress.com on the relevant product page:

1. Select the product using the filters and search field.
2. Open the product page.
3. Select **Downloads**.

CE mark

The device meets the legal requirements of the applicable EU Directives. These are listed in the corresponding EU Declaration of Conformity along with the standards applied.

Endress+Hauser confirms successful testing of the device by affixing to it the CE mark.

UKCA marking

The device meets the legal requirements of the applicable UK regulations (Statutory Instruments). These are listed in the UKCA Declaration of Conformity along with the designated standards. By selecting the order option for UKCA marking, Endress+Hauser confirms a successful evaluation and testing of the device by affixing the UKCA mark.

Contact address Endress+Hauser UK:
Endress+Hauser Ltd.
Floats Road
Manchester M23 9NF
United Kingdom

RCM marking

The measuring system meets the EMC requirements of the "Australian Communications and Media Authority (ACMA)".

Ex-approval

The devices are certified for use in hazardous areas and the relevant safety instructions are provided in the separate "Control Drawing" document. This is referenced on the nameplate.

Drinking water approval

- ACS
- KTW/W270
- NSF 61
- WRAS BS 6920

HART certification

HART interface

The measuring device is certified and registered by the FieldComm Group. The measuring system meets all the requirements of the following specifications:
- Certified according to HART 7
- The device can also be operated with certified devices of other manufacturers (interoperability)

Conformity PROFIBUS

PROFIBUS interface

The measuring device is registered with PI (PROFIBUS and PROFINET International). It meets all the requirements of PA Profile 3.02 specifications and can also be operated with certified devices of other manufacturers (interoperability).

Modbus RS485 certification

The measuring instrument meets all the requirements of the MODBUS RS485 conformity test and has the "MODBUS RS485 Conformance Test Policy, Version 2.0". The measuring instrument has successfully passed all the test procedures carried out.

EtherNet/IP certification

The measuring device is certified and registered by the ODVA (Open Device Vendor Association). The measuring system meets all the requirements of the following specifications:
- Certified in accordance with the ODVA Conformance Test
- EtherNet/IP Performance Test
- EtherNet/IP PlugFest compliance
- The device can also be operated with certified devices of other manufacturers (interoperability)

Radio approval

The measuring device has radio approval.

For detailed information on the radio approval, see the Special Documentation → 107

Measuring instrument approval

The measuring device is (optionally) approved as a cold water meter (MI-001) for volume measurement in service subject to legal metrological control in accordance with the European Measuring Instruments Directive 2014/32/EU (MID).

The measuring device is qualified according to OIML R49: 2013.

External standards and guidelines

- EN 60529
  Degrees of protection provided by enclosures (IP code)
- EN 61010-1
  Safety requirements for electrical equipment for measurement, control and laboratory use - general requirements
- EN 61326-1/-2-3
  EMC requirements for electrical equipment for measurement, control and laboratory use
- ANSI/ISA-61010-1 (82.02.01)
  Safety Requirements for Electrical Equipment for Measurement, Control and Laboratory Use - Part 1 General Requirements
- CAN/CSA-C22.2 No. 61010-1-12
  Safety Requirements for Electrical Equipment for Measurement, Control and Laboratory Use - Part 1 General Requirements
- NAMUR NE 21
  Electromagnetic compatibility (EMC) of industrial process and laboratory control equipment
- NAMUR NE 32
  Data retention in the event of a power failure in field and control instruments with microprocessors
- NAMUR NE 43
  Standardization of the signal level for the breakdown information of digital transmitters with analog output signal.
- NAMUR NE 53
  Software of field devices and signal-processing devices with digital electronics
- NAMUR NE 105
  Specifications for integrating fieldbus devices in engineering tools for field devices
- NAMUR NE 107
  Self-monitoring and diagnosis of field devices
- NAMUR NE 131
  Requirements for field devices for standard applications
- ETSI EN 300 328
  Guidelines for 2.4 GHz radio components.
- EN 301489
  Electromagnetic compatibility and radio spectrum matters (ERM).

Ordering information

Detailed ordering information is available from your nearest sales organization

1. Select the product using the filters and search field.
2. Open the product page.
3. Select **Configuration**.

Product Configurator - the tool for individual product configuration
- Up-to-the-minute configuration data
- Depending on the device: direct input of information specific to the measuring point, such as the measuring range or operating language
- Automatic verification of exclusion criteria
- Automatic creation of the order code and its breakdown in PDF or Excel output format
- Ability to order directly in the Endress+Hauser Online Shop

Application packages

Many different application packages are available to enhance the functionality of the device. Such packages might be needed to address safety aspects or specific application requirements.

The application packages can be ordered with the device or subsequently from Endress+Hauser. Detailed information on the order code in question is available from your local Endress+Hauser sales

Cleaning

Package	Description
Electrode cleaning circuit (ECC)	The electrode cleaning circuit (ECC) function has been developed to have a solution for applications where magnetite (Fe_3O_4) deposits frequently occur (e.g. hot water). Since magnetite is highly conductive this build up leads to measuring errors and ultimately to the loss of signal. The application package is designed to avoid build-up of very conductive matter and thin layers (typical of magnetite).

Diagnostics functions

Package	Description
Extended HistoROM	Comprises extended functions concerning the event log and the activation of the measured value memory. Event log: Memory volume is extended from 20 message entries (standard version) to up to 100 entries. Data logging (line recorder): ▪ Memory capacity for up to 1000 measured values is activated. ▪ 250 measured values can be output via each of the 4 memory channels. The recording interval can be defined and configured by the user. ▪ Measured value logs can be accessed via the local display or operating tool e.g. FieldCare, DeviceCare or Web server.

Heartbeat Technology

Package	Description
Heartbeat Verification +Monitoring	**Heartbeat Verification** Meets the requirement for traceable verification to DIN ISO 9001:2008 Chapter 7.6 a) "Control of monitoring and measuring equipment". ▪ Functional testing in the installed state without interrupting the process. ▪ Traceable verification results on request, including a report. ▪ Simple testing process via local operation or other operating interfaces. ▪ Clear measuring point assessment (pass/fail) with high test coverage within the framework of manufacturer specifications. ▪ Extension of calibration intervals according to operator's risk assessment. **Heartbeat Monitoring** Continuously supplies data, which are characteristic of the measuring principle, to an external condition monitoring system for the purpose of preventive maintenance or process analysis. These data enable the operator to: ▪ Draw conclusions - using these data and other information - about the impact process influences (such as corrosion, abrasion, buildup etc.) have on the measuring performance over time. ▪ Schedule servicing in time. ▪ Monitor the process or product quality, e.g. gas pockets.

Accessories

Various accessories, which can be ordered with the device or subsequently from Endress+Hauser, are available for the device. Detailed information on the order code in question is available from your local Endress+Hauser sales center or on the product page of the Endress+Hauser website:

Device-specific accessories

For the transmitter

Accessories	Description
Transmitter Promag 400	Transmitter for replacement or storage. Use the order code to define the following specifications: ▪ Approvals ▪ Output / input ▪ Display/operation ▪ Housing ▪ Software For details, see Installation Instructions EA00104D

Display guard	Is used to protect the display against impact or scoring, for example from sand in desert areas. Order number: 71228792 Installation Instructions EA01093D
Weather protection cover	Is used to protect the measuring device from the effects of the weather: e.g. rainwater, excess heating from direct sunlight. Order number: 71343504 Installation Instructions EA01191D
Connecting cable for remote version	Coil current and electrode cables, various lengths, reinforced cables available on request.
Ground cable	Set, consisting of two ground cables for potential equalization.
Post mounting kit	Post mounting kit for transmitter.
Compact → Remote conversion kit	For converting a compact device version to a remote device version.
Conversion kit Promag 50/53 → Promag 400	For converting a Promag with transmitter 50/53 to a Promag 400.

For the sensor

Accessories	Description
Ground disks	Are used to ground the medium in lined measuring tubes to ensure proper measurement. For details, see Installation Instructions EA00070D

Communication-specific accessories

Accessories	Description
Commubox FXA195 HART	For intrinsically safe HART communication with FieldCare via the USB interface. Technical Information TI00404F
Commubox FXA291	Connects Endress+Hauser field devices with a CDI interface (= Endress+Hauser Common Data Interface) and the USB port of a computer or laptop. Technical Information TI405C/07
HART Loop Converter HMX50	Is used to evaluate and convert dynamic HART process variables to analog current signals or limit values. ▪ Technical Information TI00429F ▪ Operating Instructions BA00371F
Wireless HART adapter SWA70	Is used for the wireless connection of field devices. The WirelessHART adapter can be easily integrated into field devices and existing infrastructures, offers data protection and transmission safety and can be operated in parallel with other wireless networks with minimum cabling complexity. Operating Instructions BA00061S
Fieldgate FXA42	Is used to transmit the measured values of connected 4 to 20 mA analog measuring devices, as well as digital measuring devices ▪ Technical Information TI01297S ▪ Operating Instructions BA01778S

Field Xpert SMT50	The Field Xpert SMT70 tablet PC for device configuration enables mobile plant asset management in non-hazardous areas. It is suitable for commissioning and maintenance staff to manage field instruments with a digital communication interface and to record progress. This tablet PC is designed as an all-in-one solution with a preinstalled driver library and is an easy-to-use, touch-sensitive tool which can be used to manage field instruments throughout their entire life cycle. ▪ Technical Information TI01342S ▪ Operating Instructions BA01709S
Field Xpert SMT70	The Field Xpert SMT70 tablet PC for device configuration enables mobile plant asset management in hazardous and non-hazardous areas. It is suitable for commissioning and maintenance staff to manage field instruments with a digital communication interface and to record progress. This tablet PC is designed as an all-in-one solution with a preinstalled driver library and is an easy-to-use, touch-sensitive tool which can be used to manage field instruments throughout their entire life cycle. ▪ Technical Information TI01342S ▪ Operating Instructions BA01709S
Field Xpert SMT77	The Field Xpert SMT77 tablet PC for device configuration enables mobile plant asset management in areas categorized as Ex Zone 1. ▪ Technical Information TI01418S ▪ Operating Instructions BA01923S

Service-specific accessories

Accessory	Description
Applicator	Software for selecting and sizing Endress+Hauser measuring devices: ▪ Choice of measuring devices with industrial requirements ▪ Calculation of all the necessary data for identifying the optimum flowmeter: e.g. nominal diameter, pressure loss, flow velocity and accuracy. ▪ Graphic illustration of the calculation results ▪ Determination of the partial order code, administration, documentation and access to all project-related data and parameters over the entire life cycle of a project. Applicator is available: ▪ As a downloadable DVD for local PC installation.
W@M	W@M Life Cycle Management Improved productivity with information at your fingertips. Data relevant to a plant and its components is generated from the first stages of planning and during the asset's complete life cycle. W@M Life Cycle Management is an open and flexible information platform with online and on-site tools. Instant access for your staff to current, in-depth data shortens your plant's engineering time, speeds up procurement processes and increases plant uptime. Combined with the right services, W@M Life Cycle Management boosts productivity in every phase. For more information, see:
FieldCare	FDT-based plant asset management tool from Endress+Hauser. It can configure all smart field units in your system and helps you manage them. By using the status information, it is also a simple but effective way of checking their status and condition. Operating Instructions BA00027S and BA00059S
DeviceCare	Tool for connecting and configuring Endress+Hauser field devices. Innovation brochure IN01047S
Commubox FXA291	Connects Endress+Hauser field devices with a CDI interface (= Endress +Hauser Common Data Interface) and the USB port of a computer or laptop. Technical Information TI00405C

System components

Accessories	Description
Memograph M graphic data manager	The Memograph M graphic data manager provides information on all the relevant measured variables. Measured values are recorded correctly, limit values are monitored and measuring points analyzed. The data are stored in the 256 MB internal memory and also on a SD card or USB stick. ▪ Technical Information TI00133R ▪ Operating Instructions BA00247R

Supplementary documentation

For an overview of the scope of the associated Technical Documentation, refer to the following:
- *W@M Device Viewer*
  nameplate
- *Endress+Hauser Operations App*: Enter the serial number from the nameplate or scan the matrix code on the nameplate

Standard documentation

Brief Operating Instructions

Brief Operating Instructions for the sensor

Measuring device	Documentation code
Proline Promag W	KA01266D

Transmitter Brief Operating Instructions

Measuring device	Documentation code			
	HART	PROFIBUS DP	Modbus RS485	EtherNet/IP
Proline 400	KA01263D	KA01420D	KA01419D	KA01418D

Operating Instructions

Measuring device	Documentation code			
	HART	PROFIBUS DP	Modbus RS485	EtherNet/IP
Promag W 400	BA01063D	BA01234D	BA01231D	BA01214D

Description of device parameters

Measuring device	Documentation code			
	HART	PROFIBUS DP	Modbus RS485	EtherNet/IP
Promag 400	GP01043D	GP01044D	GP01045D	GP01046D

Supplementary device-dependent documentation

Special Documentation

Content	Documentation code
Display modules A309/A310	SD01793D
Information on Custody Transfer Measurement	SD02038D
Information on Custody Transfer Measurement	SD02561D

Content	Documentation code			
	HART	PROFIBUS DP	Modbus RS485	EtherNet/IP
Web server	SD01811D	SD01813D	SD01812D	SD01814D
Heartbeat Verification + Monitoring	SD01847D	SD02569D	SD02568D	SD02570D

Installation Instructions

Content	Comment
Installation instructions for spare part sets and accessories	Documentation code: specified for each individual accessory → 🖹 104.

Registered trademarks

HART®
Registered trademark of the FieldComm Group, Austin, USA

PROFIBUS®
Registered trademark of the PROFIBUS User Organization, Karlsruhe, Germany

Modbus®
Registered trademark of SCHNEIDER AUTOMATION, INC.

EtherNet/IP™
Trademark of ODVA, Inc.

Endress+Hauser
People for Process Automation

Consultas y ventas: AQUAREP · www.aquarep.com.ar · info@aquarep.com.ar · WhatsApp +54 9 11 6091-0087