TI00381C/07/EN/17.25-00
71717627
2025-06-30

Technical Information
Liquiline M CM42

Two-wire transmitter for hazardous and non-hazardous areas



Memosens: pH/ORP, oxygen, conductivity
Analog sensors: pH/ORP, conductivity, concentration, resistivity

Application

Liquiline M CM42 is a two-wire transmitter for liquid analysis in all areas of process technology.

The very robust plastic version and the hygienic stainless steel version are perfectly tailored to the following applications:
- Chemical processes
- Pharmaceutical industry
- Food technology
- Applications in hazardous areas

The transmitter is suitable for pollution degree 3 according to IEC/EN 61010-1.

Your benefits

- Cost-reducing:
  - Easy commissioning with Quick Setup and navigator
  - Memosens: plug & play with lab-calibrated sensors
  - Optimization of process and maintenance with sensor data
  - Reduced inventory thanks to modular design
  - Effective asset management with Fieldcare and W@M

Endress+Hauser
People for Process Automation

Consultas y ventas: AQUAREP · www.aquarep.com.ar · info@aquarep.com.ar · WhatsApp +54 9 11 6091-0087

[Continued from front page]

- Safe:
  - Memosens: Active indication of a cable break
  - User-guided commissioning, graphic display and plain-text guidance for maximum operating safety
  - Approvals: ATEX, IECEx, CSA, FM, NEPSI, Japan-Ex, EAC-Ex
  - User administration: Code-protected configuration

Table of contents

Function and system design 4
Measuring system 4

Equipment architecture 5
Firmware 5
DAT memory modules 6
Connectable sensors 6

Reliability 7
Dependability 7
Ease of maintenance 8
Security 9

Input 10
Measured variables 10
Measuring ranges 10

Binary input Memosens 10
Cable specification 10
Ex specification 10

Analog input pH/ORP 10
Cable specification 10
Temperature sensors 10
Ex specification 11
Input impedance 11
Input leakage current 11

Analog input conductivity 11
Cable specification 11
Temperature sensors 11
Ex specification, sensors with conductive measurement of conductivity 12
Ex specification, sensors with inductive measurement of conductivity 12

Output 12
Output signal 12
Signal on alarm 13
Load 13
Output span 13
Ex specification, current output 13
Ex specification PROFIBUS and FOUNDATION Fieldbus . . . 13

Protocol-specific data 13
HART 13
PROFIBUS PA 14
FOUNDATION Fieldbus 14

Current output, passive 14
Span 14
Signal characteristics 14
Cable specification 14

Power supply 15
Supply voltage 15
Cable specification 15
Grounding the housing 16
Power supply and signal circuit 16
Sensor connection 18

Performance characteristics 27
Response time of current output 27
Memosens measurement error 27
Tolerance, current outputs 27
Repeatability 27
Temperature compensation, conductivity 27
Temperature adjustment 27

Installation 27
Installation requirements 27
Installation in hazardous areas 29
Installation options 31

Environment 32
Ambient temperature 32
Storage temperature 32
Relative humidity 32
Degree of protection 32
Electromagnetic compatibility 32
Pollution degree 32

Mechanical construction 33
Dimensions 33
Weight 34
Materials 34

Operability 34
Operation concept 34
Local operation 34
Language packages 35
Remote operation 36

Certificates and approvals 37
CE mark 37
Ex approvals 37
Test reports 37
External standards and guidelines 37

Ordering information 38
Product page 38
Product Configurator 38
Scope of delivery 38

Accessories 38
Device-specific accessories 38
Communication-specific accessory 44
Service-specific accessories 44
System components 45

Function and system design

Measuring system

A complete measuring system comprises:
- Liquiline M CM42 transmitter with mounting plate (e.g. for wall mounting
- Sensor and suitable sensor cable
- The following are optional:
  - Suitable probe holder
  - Post retainer
  - Weather protection cover

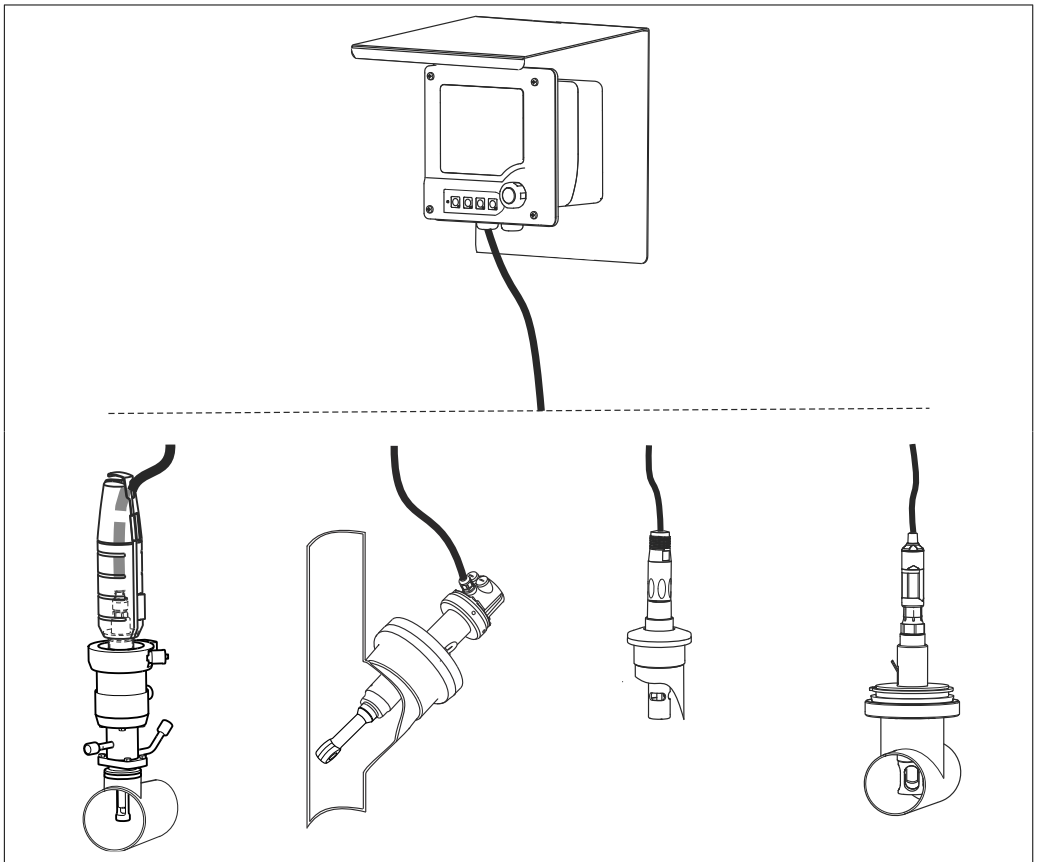

pH/ORP	**Conductivity, inductive measurement**	**Conductivity, conductive measurement**	**Oxygen**
▪ Memosens or analog ▪ CM42-M/N/P... ▪ Measuring cable CYK10 or CPK9 ▪ Assembly CPA875 ▪ Sensor CPS11D/ CPS11	▪ Memosens or analog ▪ CM42-L/I... ▪ Fixed cable ▪ Assembly CLA111 ▪ Sensor CLS50D/CLS50	▪ Memosens or analog ▪ CM42-K/C... ▪ Measuring cable CYK10 or CPK9 ▪ Sensor CLS16D/CLS16	▪ Memosens ▪ CM42-O... ▪ Measuring cable CYK10 ▪ Assembly CPA442 ▪ Sensor COS22D

You can combine your measuring point with a variety of assemblies and sensors → 38. For more

NOTICE

Effect of climatic conditions: rain, snow, direct sunlight

Device damage to total device failure is possible!

► When installing outside, always use the weather protection cover. (→ 39)

Equipment architecture

Firmware

You can select the following from these software packages:
- Basic version (CM42-******EA)
  Standard application for the most common measuring points
- Advanced version (CM42-******EB)
  Many additional functions that increase the safety and quality
- Advanced features (CM42-******EH)
  Additionally with measuring point monitor, overview of operating data

Package	Features		
	pH/ORP (glass/ISFET)	**Conductivity**	**Oxygen**

Standard version	**Analog sensors**
	▪ Offset and two-point calibration
	▪ Sample calibration
	▪ Calibration with standard buffers
	▪ Manual buffer specification
	▪ Temperature compensation
	▪ Temperature adjustment
	▪ Isotherm intersection
	▪ Simulation current output
	▪ Self diagnostic
	▪ Calibration stability settings
	▪ Clock
	Memosens sensors
	Like analog sensors and additionally:
	▪ Sensor information
	▪ Sensor check
		Analog sensors
		▪ Sample calibration
		▪ Temperature calibration: Single-point
		▪ Temperature compensation: Linear, NaCl, ultrapure water (NaCl, HCl)
		▪ Simulation current output
		▪ Self diagnostic
		▪ Concentration measurement
		▪ Clock
		Memosens sensors
		Like analog sensors and additionally:
		▪ Sensor information
		▪ Sensor check
			Memosens sensors
			▪ Slope calibration
			  ▪ In air (100% RH)
			  ▪ In water (100% air-saturated)
			  ▪ In air (specifying the current absolute air pressure and the relative humidity)
			▪ Zero point calibration
			▪ Sample calibration
			▪ Temperature adjustment
			▪ Medium compensation
			▪ Calibration stability settings
			▪ Simulation current output
			▪ Self diagnostic
			▪ Clock
			▪ Sensor information
			▪ Sensor check

Advanced version	**"Basic version" software package and additionally:** **Analog sensors** ▪ Medium compensation ▪ Calibration timer ▪ Sensor condition check (SCC) **Memosens sensors** Like analog sensors and additionally: ▪ Operating hours counter ▪ Sterilization counter	**Analog sensors** ▪ Calibration with separate installation factor (only inductive measurement) ▪ Polarization detection (only conductive measurement) ▪ Temperature compensation via user table ▪ Two-point temperature adjustment: offset and slope ▪ USP alarm and pre-alarm **Memosens sensors** Like analog sensors and additionally: ▪ Operating hours counter ▪ Sterilization counter	**Memosens sensors** ▪ Configuration of polarization voltage ▪ Calibration timer ▪ Sensor statistics ▪ Operating hours counter ▪ Sterilization counter
	All devices, regardless of measuring parameter: ▪ Logbooks ▪ Data logbook ▪ Free assignment of measured values to current outputs (optional) ▪ Diagnostic function switch-on/off ▪ Advanced user administration ▪ Current output tables		

Package	Features		
	pH/ORP (glass/ISFET)	Conductivity	Oxygen
Advanced features	**"Advanced version" software package and additionally:** Measuring point operating data: ▪ MTBF (mean time between failures), MTBC (mean time between calibrations), MTTR (mean time to repair) ▪ Measuring point operating time ▪ Number of failures ▪ Failure time ▪ Availability ▪ Process check system (PCS)		

DAT memory modules

There are 3 different types of DAT modules that can either be ordered as optional accessories or are already included in the delivery:
- **SystemDAT**
  Sensor type replacement, firmware updates (more recent firmware version) or change of language group
- **FunctionDAT**
  Extension of function range ("Advanced version" firmware or 2nd current output)
  Upgrade to "Advanced functions" not possible
- **CopyDAT**
  Memory for own configuration settings

Device extensibility

▶ Before ordering a FunctionDAT, check if it is possible to extend the functional range of your device.

Connectable sensors

pH/ORP
- Memosens and analog glass electrodes
- Memosens and analog ISFET sensors
- Memosens and analog ORP electrodes
- Memosens pH/ORP combined sensors
- Memosens and analog enamel pH electrodes
- Analog single electrodes (glass or antimony)

Conductivity
- Memosens and analog sensors, conductive measurement of conductivity
  - Two-electrode sensors
  - Four-electrode sensors
- Memosens and analog sensors, inductive measurement of conductivity

Oxygen
Amperometric and optical sensors:
- Memosens technology
- in 12 mm and 40 mm design

Reliability

Dependability

Memosens

Memosens makes your measuring point safer and more reliable:
- Non-contact, digital signal transmission enables optimum galvanic isolation
- Sensor can be calibrated in a lab, thus increasing the availability of the measuring point in the process
- Intrinsically safe electronics mean operation in hazardous areas is not a problem.
- Predictive maintenance thanks to recording of sensor data, e.g.:
  - Total hours of operation
  - Hours of operation with very high or very low measured values
  - Hours of operation at high temperatures
  - Number of steam sterilizations
  - Sensor condition

Completely watertight
- Can even be connected under water
- No contact corrosion

Quick Setup

To the first measured value within 1 minute
Once you have configured the few parameters in the Quick Setup menu, the measuring point is ready to measure. The first measured value is reliably displayed.

Sensor Condition Check (SCC, only pH)

This function monitors the condition of the electrode and the degree of electrode aging. The status is indicated by the messages **SCC electrode sufficient** or **SCC electrode cond. bad**. The condition of the electrode is updated after every calibration.

Sensor Check System (SCS, pH only)

The Sensor Check System (SCS) monitors the high impedance of the pH glass. An alarm is issued if a minimum impedance value is undershot or a maximum impedance is exceeded.
- Glass breakage is the main reason for a drop in high impedance values
- The reasons for increasing impedance values include:
  - Dry sensor
  - Worn pH glass membrane

Process Check System (PCS): Life check ("Advanced features" firmware version only)

The process check system (PCS) checks the measuring signal for stagnation. An alarm is triggered if the measuring signal does not change over a specific period (several measured values).

The main causes of stagnating measured values are:
- Contaminated sensor, or sensor outside of medium
- Sensor defective
- Process error (e.g. through control system)

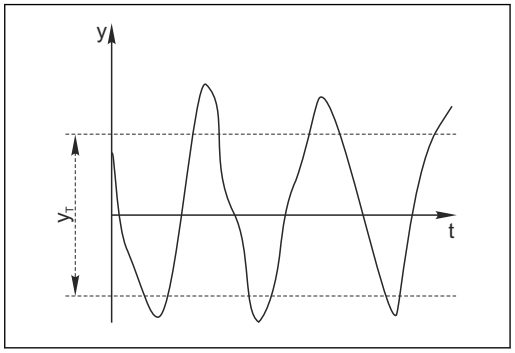

1 *Normal measuring signal, no alarm*

y *Measuring signal*
y_T *Minimum signal variation*

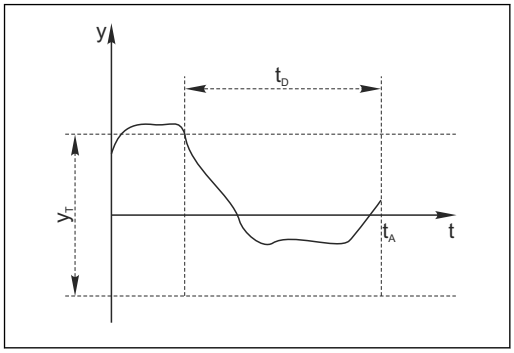

2 *Stagnating signal, alarm is triggered*

t_D *Defined time interval*
t_A *Time when the alarm is triggered*

Polarization monitoring (conductive measurement of conductivity only)

Polarization effects in the boundary layer between the sensor and the measuring solution limit the measuring range of conductive conductivity sensors.

The transmitter can detect and report polarization effects by using a smart signal analysis process.

United States Pharmacopoeia, USP and European Pharmacopoeia, EP (conductivity only)

The requirements placed on ultrapure water in the pharmaceutical industry are primarily defined by the American USP and European EP standards.

The transmitter meets the USP/EP requirements for conductivity measuring systems:
- Precise temperature measurement at place of conductivity measurement
- Able to simultaneously display uncompensated conductivity values and temperature
- Display resolution 0.01 µS/cm
- Exact factory calibration of the transmitter with traceable precision resistance values (optional)
- Exact factory calibration of the sensors in accordance with ASTM D 1125-91 or ASTM D 5391-99 (optional)
- Temperature-dependent measured value monitoring according to USP and EP

The limit functions for pharmaceutical water in accordance with USP and EP specifications are implemented in the "Advanced" software package:
- "Water for Injection" (WFI) as per USP <645> and EP
- "Highly Purified Water" (HPW) as per EP
- "Purified Water" (PW) as per EP

The uncompensated conductivity value and the temperature are measured for the USP/EP limit functions. The measured values are compared against the tables defined in the standards. An alarm is triggered if the limit value is exceeded. Furthermore, it is also possible to configure an early warning alarm that signals undesired operating states before they occur.

Application-optimized calibration models (oxygen)

The transmitter offers separate functions to enable process-oriented sensor calibration at the zero point or via the slope.

Various calibration models are available for this purpose, ranging from simple slope calibration in water vapor-saturated air to slope calibration by specifying the absolute air pressure and the relative humidity at the place of measurement. The latter model permits in-process calibration both during operation and in sterilization and cleaning phases.

The calibrations and sterilizations are counted separately for the sensor and membrane cap. When a membrane cap is replaced, the corresponding counter can be reset.

Ease of maintenance

Modular design

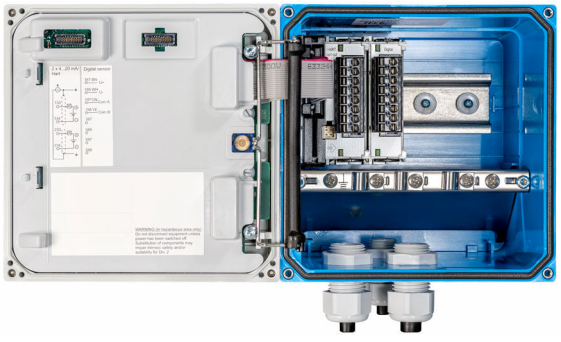

3 *Interior of Liquiline (version with sensor module)*



4 *Plug-in modules*

Sensor monitor ("Advanced version" and "Advanced features" firmware packages only)

The sensor monitor is located in the DIAG menu. Important sensor data, including warning and alarm limits, are visualized graphically or numerically at a glance.

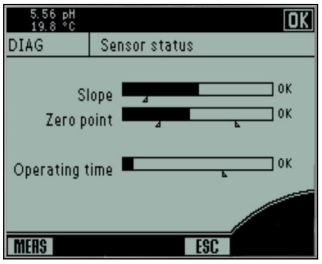

5 *Sensor monitor, graphic visualization (example)*

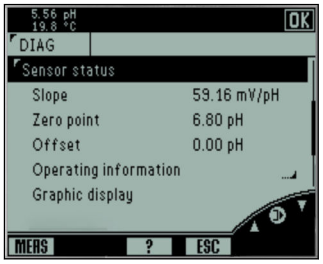

6 *Sensor monitor, numeric visualization*

Measuring point monitor (only "Advanced features" firmware package)

The measuring point monitor is located in the DIAG menu. Important operating data are visualized numerically at a glance.

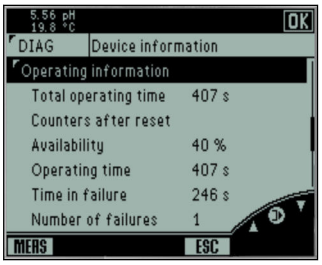

7 *Measuring point monitor (example)*

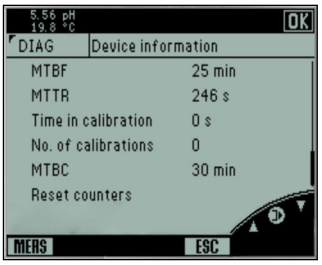

8 *Measuring point monitor, continuation*

Security

User administration ("Advanced version" and "Advanced features" firmware packages only)

The device has a user administration function to prevent unplanned modifications to the measuring point. You must first log in as an Expert to enable the user administration function. Therefore, the first time you log onto the device you are requested to enter a password (the user name "Admin" is then already entered).

In the Advanced version, the user administration function offers two different modes:

1. Roles
- There are 3 fixed user roles (Expert, Maintenance, Operator).
- "Experts" always have all levels of authorization. "Operator" is the role with the lowest level of authorization.
- Each role has its own password, which can be modified.
- You cannot create other user roles.

2. User accounts
- You can create and manage a maximum of 15 user accounts.
- You may only manage accounts if you are logged on as an "Expert".
- In each user account, you define the user name and the associated password and assign the new user one of the 3 user roles (Operator, Maintenance, Expert).
- More than one user account can have the "Expert" role.

IT security

The manufacturer warranty is valid only if the product is installed and used as described in the Operating Instructions. The product is equipped with security mechanisms to protect it against any inadvertent changes to the settings.

IT security measures, which provide additional protection for the product and associated data transfer, must be implemented by the operators themselves in line with their security standards.

Input

Measured variables

→ Documentation of the connected sensor

Measuring ranges

→ Documentation of the connected sensor

Binary input Memosens

MEMOSENS

pH/ORP, conductivity, oxygen

Cable specification

CYK10, CYK20 with Memosens	Max. cable length 100 m (330 ft)
Fixed cable with Memosens (CLS50D, CLS54D)	Max. cable length 100 m (330 ft)

Ex specification

Intrinsically safe sensor circuit with type of protection: Ex ia IIC [1] or Ex ic IIC [2] or Ex ib IIC [3] or 1Ex ib IIC [4]	
Max. output voltage U_o	5.04 V
Max. output current I_o	80 mA
Max. output power P_o	112 mW

1) CM42-*E*********, CM42-*I*********, CM42-*J*********
2) CM42-*V*********, CM42-*F*********
3) CM42-*U*********
4) CM42-*K*********

- ▶ CM42-*V**00***** with the identification marking II 3G Ex nA[ic] IIC T6 Gc are suitable for the connection of Memosens measuring cables CYK10-G*** with a maximum cable length of 100 m. The sensors connected to the cable must bear at least one of the following identification markings: II 3G Ex ic Tx Gc (Zone 2), II 2G Ex ib Tx Gb (Zone 1), or II 1G Ex ia Tx Ga (Zone 0). The measuring cable and sensor may only ever be operated in connection with CM42-*V in explosion protection Zone 2.
- ▶ Only sensors that may be arranged in Zone 2 may be connected to CM42-*F**00***** with the identification marking II 3D tc [ic IIC Gc] IIIC T85°C Dc with an "ic"-type Memosens cable (or better); here, the CM42 is arranged in Zone 22.

Analog input pH/ORP

Cable specification

Without SCS	Max. cable length 50 m (160 ft)
With SCS	Max. cable length 20 m (65 ft)

Temperature sensors

- Pt100
- Pt1000
- NTC 30K

Ex specification

Intrinsically safe sensor circuit with type of protection: Ex ia IIC [1] or Ex ic IIC [2] or 1Ex ib IIC [3]		
	Glass	**ISFET**
Max. output voltage U_o	10.08 V	10.08 V
Max. output current I_o	4.1 mA	50.7 mA
Max. output power P_o	10.2 mW	128 mW
Max. external inductance L_o	1 mH	1 mH
Max. external capacitance C_o	250 nF	250 nF
Connection class according to NE116 [4]	SensISCO1X	-

1) CM42-*E*********, CM42-*I*********
2) CM42-*V*********, CM42-*F*********
3) CM42-*K*********
4) CM42-*E*********, CM42-*F*********

When pH/ORP glass electrodes are connected to terminals 317, 318, 320, 111, 112 and 113, the device corresponds to connection class 1 according to NAMUR Recommendation NE116 (SensISCO). Terminals 315 and 316 may not be connected for this classification. The device is labeled SensISCO1X.

Input impedance

> 10^{12} Ω (at rated operating conditions)

Input leakage current

< 10^{-13} A (at rated operating conditions)

Analog input conductivity

Cable specification

Conductivity/resistivity, conductive measurement [1]	
Two-electrode sensor	
10 µS·k to 20 mS·k / 0.1 MΩ/k to 50 Ω/k	Max. cable length 100 m (330 ft)
5 µS·k to 20 mS·k / 0.2 MΩ/k to 50 Ω/k	Max. cable length 50 m (160 ft)
0.1 µS·k to 20 mS·k / 20 MΩ/k to 50 Ω/k	Max. cable length 15 m (50 ft)
Conductivity, conductive measurement	
Four-electrode sensor	
10 µS·k to 1.5 S·k	Max. cable length 100 m (330 ft)
0.1 µS·k to 20 mS·k	Max. cable length 15 m (50 ft)
Conductivity, inductive measurement [2]	
	Max. cable length 55 m (180 ft) (CLS50) Max. cable length 50 m (160 ft) (CLS54)

1) With cable CYK71, CPK9 or fixed cable
2) With cable CLK5, CLK6 or fixed cable

Temperature sensors

- Pt100
- Pt1000

Ex specification, sensors with conductive measurement of conductivity

Intrinsically safe sensor circuit with type of protection: Ex ia IIC [1] or Ex ic IIC [2]	
Max. output voltage U_o	10.08 V
Max. output current I_o	23 mA
Max. output power P_o	57 mW
Max. external inductance L_o	300 µH
Max. external capacitance C_o	50 nF

1) CM42-*G*********, CM42-*E*********, CM42-*I*********
2) CM42-*V*********, CM42-*F*********

Ex specification, sensors with inductive measurement of conductivity

Intrinsically safe sensor circuit with type of protection: Ex ia IIC [1] or Ex ic IIC [2] or Ex ib IIC [3] or 1Ex ib IIC [4]	
Max. output voltage U_o	10.08 V
Max. output current I_o	64 mA
Max. output power P_o	128 mW
Max. external inductance L_o	0.1 mH
Max. external capacitance C_o	1.8 µF

1) CM42-*G*********, CM42-*E*********, CM42-*I*********, CM42-*J*********
2) CM42-*V*********, CM42-*F*********
3) CM42-*U*********
4) CM42-*K*********

Output

Output signal

Current output

Depending on version:
- 1x 4 to 20 mA, passive, potentially isolated from the sensor circuit (Memosens only) [1] [2]
- 2x 4 to 20 mA, passive, potentially isolated from the sensor circuit (Memosens only) and from one another [1] [2] [3]

HART

Signal encoding	FSK ± 0.5 mA above current signal
Data transmission rate	1200 baud
Load (communication resistor)	250 Ω

PROFIBUS PA

Signal encoding	Manchester Coding Bus Powered (MBP), in compliance with IEC 61158-2
Data transmission rate	31.25 kBit/s
Bus termination	External
Connection to PROFIBUS-DP network	Via segment coupler (in non-Ex mode)

1) In Memosens potential isolation is implemented in the sensor connector
2) In the case of inductive sensors with a Memosens protocol CLS50D and CLS54D, not potentially isolated from the sensor circuit!
3) Current output 1 and current output 2 (optional)

FOUNDATION Fieldbus

Signal encoding	Manchester Coding Bus Powered (MBP), in compliance with IEC 61158-2
Data transmission rate	31.25 kBit/s
Bus termination	External

Signal on alarm

Configurable, depending on the version:
- 3.6 to 21.5 mA (4.0 mA fixed in HART Multidrop mode)
- Digital via fieldbus [4)]

Load

Max. load with a supply voltage of 24 V: 500 Ω

Max. load with a supply voltage of 30 V: 750 Ω

Output span

3.6 to 21.5 mA

Ex specification, current output

Intrinsically safe power supply and signal circuits, passive	
Max. input voltage U_i	30 V
Max. input current I_i	100 mA
Max. input power P_i	800 mW (all except TIIS) or 750 mW (TIIS)
Max. internal inductance L_i	29 µH (output 1) 24 µH (output 2)
Max. internal capacitance C_i	1.2 nF (output 1) 0.2 nF (output 2)

Ex specification PROFIBUS and FOUNDATION Fieldbus

Suitable for use as a field device in a FISCO system according to EN/IEC 60079-27	
Max. input voltage U_i	17.5 V
Max. input current I_i	380 mA
Max. input power P_i	5.32 W
Max. internal inductance L_i	< 10 µH
Max. internal capacitance C_i	< 5 nF

Protocol-specific data

HART

Manufacturer ID	11_h
Device type	$11A0_h$ (CM42-M/N/P), $11A1_h$ (CM42-C/I/K/L), $11A2_h$ (CM42-O)
Device revision	1
Device description files (DD/DTM)	Device Integration Manager DIM
Device variables	7 (CM42-M/N/O/P), 3 (CM42-C/I/K/L), predefined device variables, dynamic variables PV, SV, TV, QV
Supported features	PDM DD, AMS DD, DTM, Handheld DDs

4) For version with PROFIBUS PA or FOUNDATION Fieldbus

PROFIBUS PA

Manufacturer ID	1
Device type	1 (CM42-M/N/P), 1566_h (CM42-C/I/K/L), 1567_h (CM42-O) In the compatibility mode: 1 (CM42-M/N/P), 1544_h (CM42-C/I/K/L), 1545_h (CM42-O), 1545_h (Profile Identifier, Analyzer PA Devices)
Profile version	
Device database files (GSD files)	Device Integration Manager DIM
Output variables	6 AI blocks
Supported features	▪ 1 MSCY0 connection (cyclical communication, master class 1 to slave) ▪ 1 MSAC1 connection (acyclical communication, master class 1 to slave) ▪ 2 MSAC2 connections (acyclical communication, master class 2 to slave) ▪ Addressing using DIL switches or software ▪ GSD, PDM DD, DTM ▪ Status output: Condensed oder Classic

FOUNDATION Fieldbus

Manufacturer Name	Endress+Hauser
Model Name	Liquiline_pHORP (CM42-M/N/P) or Liquiline_Cond (CM42-C/I/K/L) or Liquiline_Oxygen (CM42-O)
Manufacturer ID (hex)	452B48
Device Type (hex)	10A0 (CM42-M/N/P) or 10A1 (CM42-C/I/K/L) or 10A2 (CM42-O)
Device Revision (hex)	1 (CM42-O) or 2 (CM42-M/N/P/C/I/K/L)
Device Class	Link Master
ITK Version	6.1.1
Function and other Blocks	1xRB, 6xAI, 2xDI, 1xPID, 2xAALM, 1xISEL, 1xSC, 7xTB

Current output, passive

Span

3.6 to 21.5 mA

Signal characteristics

Linear, table [5)]

Cable specification

Cable type: shielded cable, Ø 2.5 mm (14 AWG)

5) Table only for "Advanced version" and "Advanced features" firmware

Power supply

Supply voltage

Current output / HART:

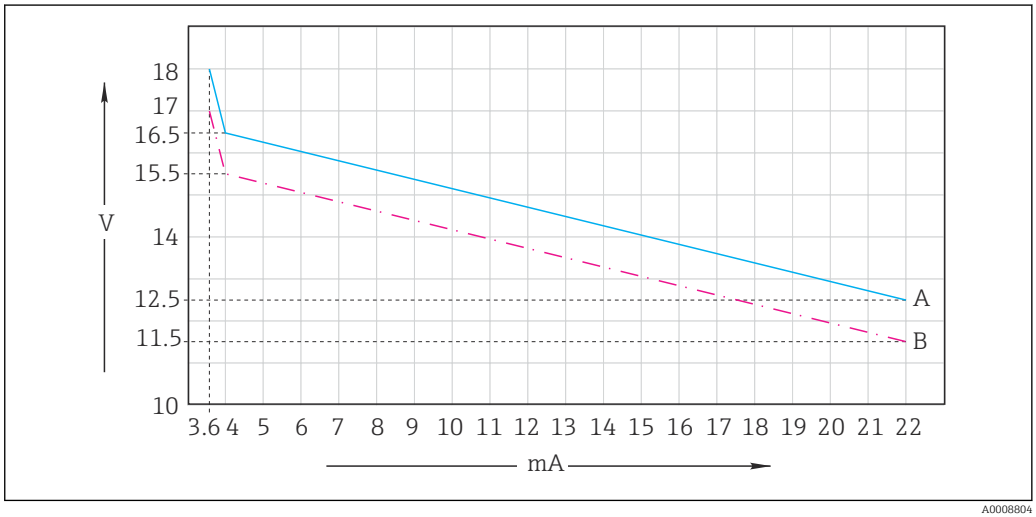

9 *Minimum supply voltage at the transmitter depending on the output current*

A With HART communication
B Without HART communication

Supply voltage: [1] max. 30 V DC
Nominal voltage: 24 V DC

1) The power supply must meet the relevant safety requirements and be isolated from the mains voltage by double or reinforced insulation.

PROFIBUS/FOUNDATION Fieldbus

Supply voltage	9 to 32 V DC (non-Ex) 9 to 17.5 V DC (Ex, FISCO)
Bus current consumption	22 mA

Cable specification

Qualified cable glands

Cable gland	Clamping area, permitted cable diameter
M16 x 1.5 mm	3 to 6 mm (0.12 to 0.24")
M20 x 1.5 mm	5 to 9 mm (0.20 to 0.35")
M20 x 1.5 mm	6 to 12 mm (0.24 to 0.47")
NPT 3/8"	3 to 6 mm (0.12 to 0.24")
NPT 1/2"	5 to 9 mm (0.20 to 0.35")
NPT 1/2"	6 to 12 mm (0.24 to 0.47")
G3/8	3 to 6 mm (0.12 to 0.24")
G1/2	5 to 9 mm (0.20 to 0.35")
G1/2	9 to 12 mm (0.35 to 0.47")
Dummy plug M16	-
Dummy plug M20	-

Cable cross-section

Max. cable cross-section: 2.5 mm^2 (≙14 AWG), GND 4 mm^2 (≙12 AWG)

Grounding the housing

Plastic housing

⚠ WARNING

Electrical voltage at non-grounded cable mounting rail

No shock protection is provided!

- ▶ Connect the cable mounting rail to the foundation ground using a separate ≥2.5 mm² (≙14 AWG) functional ground.

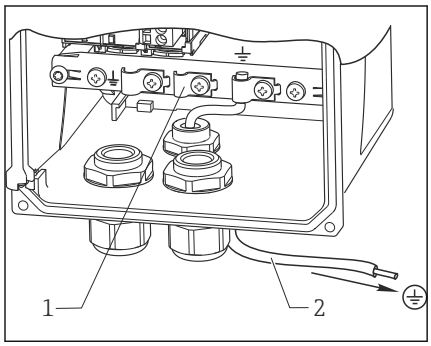

1 Cable mounting rail
2 ≥2.5 mm² (14 AWG) functional ground

10 Grounding the housing

Stainless steel housing

⚠ WARNING

Electrical voltage at non-grounded housing

No shock protection is provided!

- ▶ Connect the external ground connection on the housing to the foundation ground using a separate cable (GN/YE) (≥2.5 mm², ≙14 AWG).

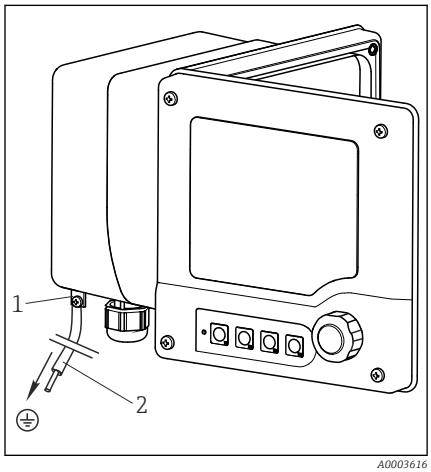

1 External ground connection
2 ≥2.5 mm² (≙14 AWG) cable (GN/YE)

11 Grounding the housing

Power supply and signal circuit

4 to 20 mA

- ▶ Connect the transmitter with a shielded two-wire cable.
  - ↳ The type of shield connection depends on the anticipated interference influence. To suppress electrical fields, it suffices to ground the shield on one side. If you also want to suppress interference from an alternating magnetic field, you must ground the shield on both sides.

The second current output is optionally available (Product Configurator on

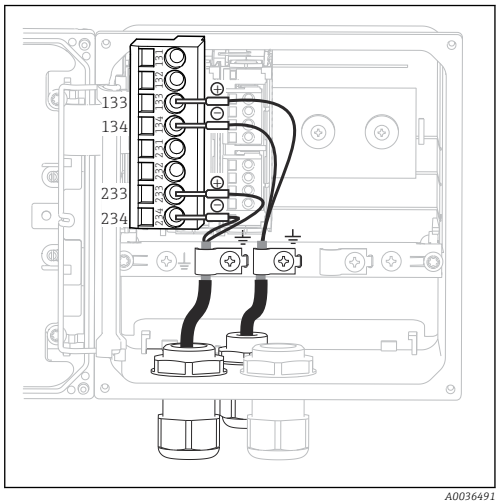

12 *In-device view (CPU module)*

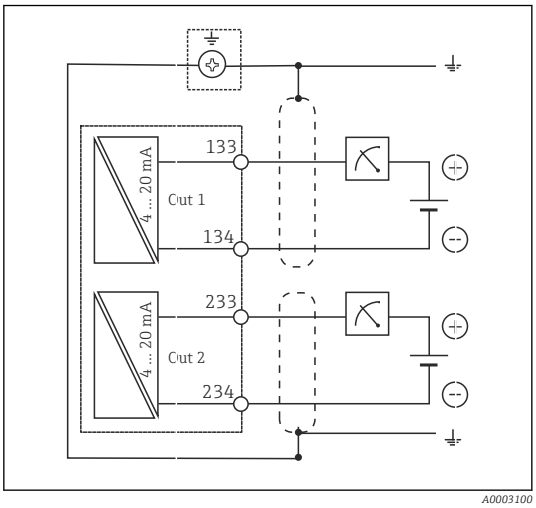

13 *Wiring diagram*

The figures show the version with the shield grounded at both sides to suppress interference from an alternating magnetic field.

4 to 20 mA / HART

You must use a two-wire cable grounded on both sides to ensure secure communication via the HART protocol and to comply with NAMUR NE 21 specifications.

- ▶ Connect the transmitter with a two-wire cable grounded at both sides.

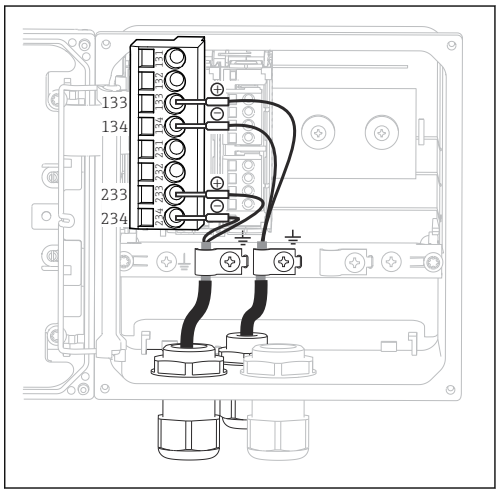

14 *In-device view (CPU module)*

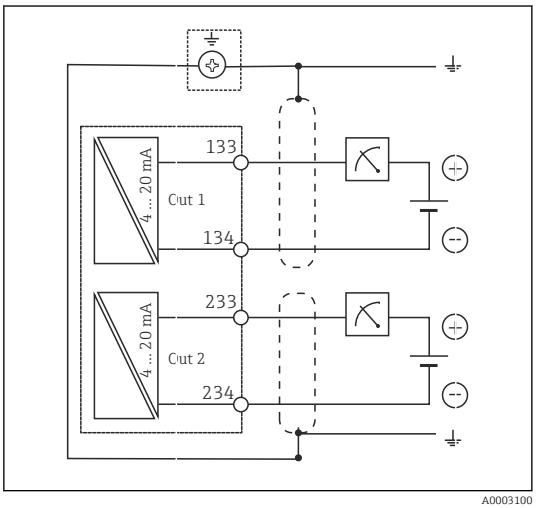

15 *Wiring diagram*

Power is only supplied to the device via current output 1, not via current output 2.

PROFIBUS PA and FOUNDATION Fieldbus

Use a fieldbus cable grounded on both sides (device **and** PCS).

There are various ways to establish the connection:

1. Two-wire cable grounded on both sides, "hard grounding"
   (generally to be preferred over "capacitive ground connection")
2. If there is a risk of large potential equalization currents:
   Shielded two-wire cable, "Capacitive ground connection"
   (shield grounded at the device via capacitor, "C-module" accessory required)
   Not for use in the hazardous area!
3. Using the fieldbus connection socket (accessories)

"Hard grounding"

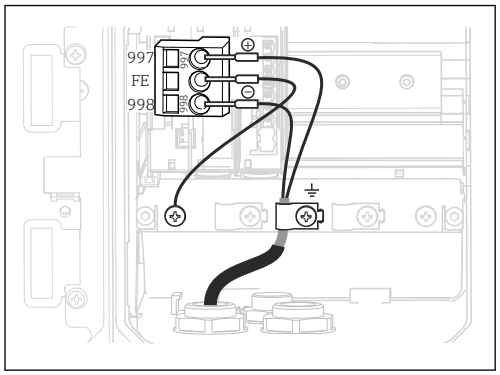

16 *In-device view (CPU module)*

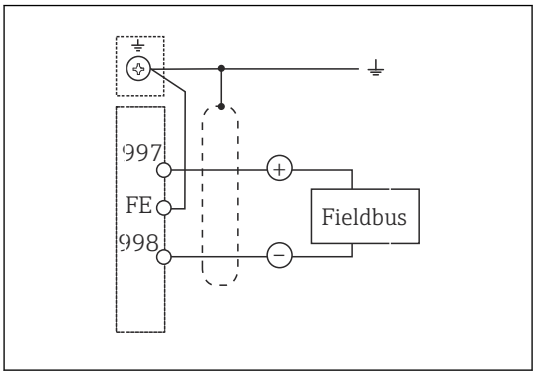

17 *Wiring diagram*

"Capacitive ground connection" with the C-module

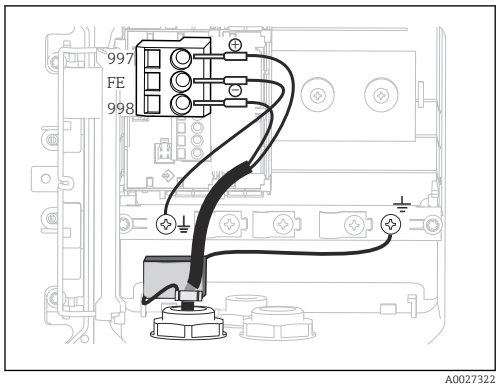

18 *In-device view (CPU module)*

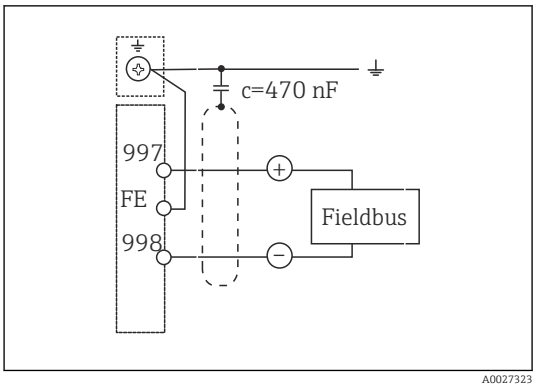

19 *Wiring diagram*

"Fieldbus connection socket"

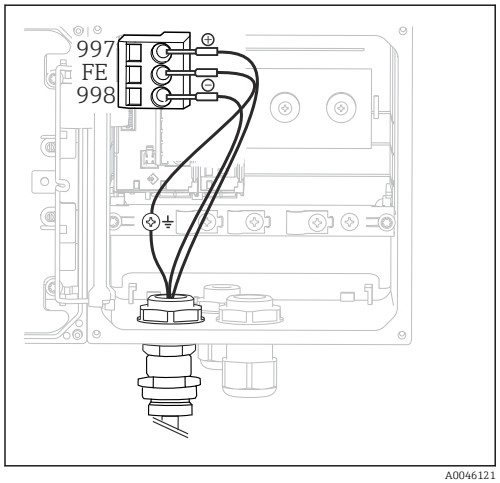

20 *In-device view (CPU module)*

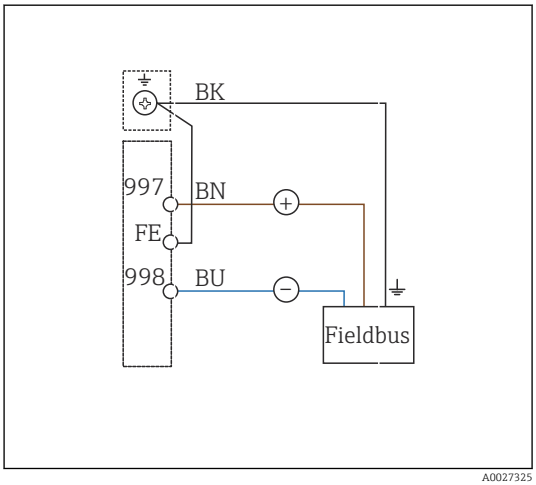

21 *Wiring diagram*

Sensor connection

NOTICE

No shield against electrical and magnetic interference

Interference can lead to incorrect measurement results!

- Connect shielded connections or terminals to the functional ground (⏚) (there is no protective ground on the plastic housing (⏚)).
- Keep magnetic interference away from the sensor, as inductive conductivity sensors use magnetic fields.

Explanation of abbreviations used in the following graphics:

Abbreviation	Meaning
pH	pH signal
Ref	Signal from reference electrode
Src	Source
Drn	Drain
PM	Potential matching
U_+	Power supply of digital sensor
U_-	
Com A	Communication signals of digital sensor
Com B	
ϑ	Signal of temperature sensor
d.n.c.	do not connect

Memosens sensors

MEMOSENS

Connection via Memosens cable CYK10

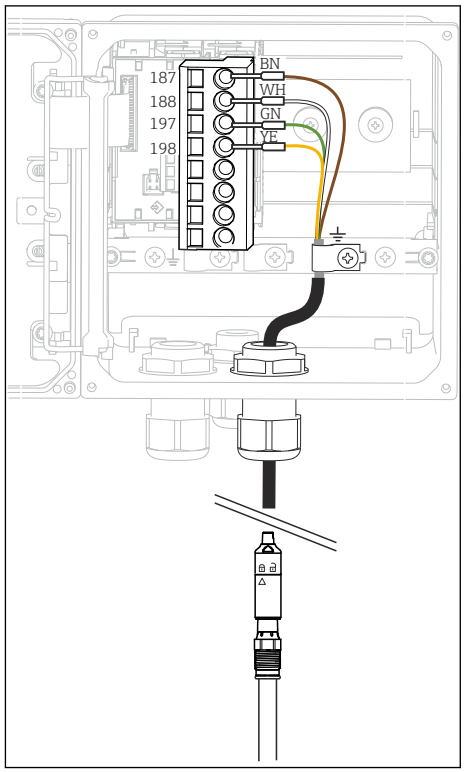

22 *In-device view (sensor module)*

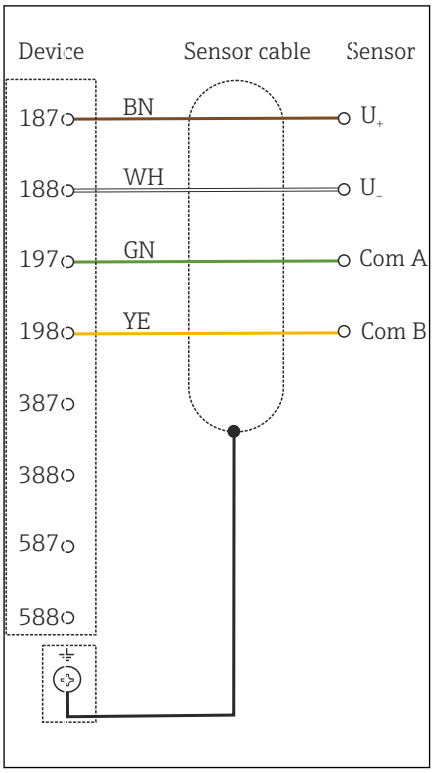

23 *Wiring diagram*

MEMOSENS

Connection via sensor fixed cable

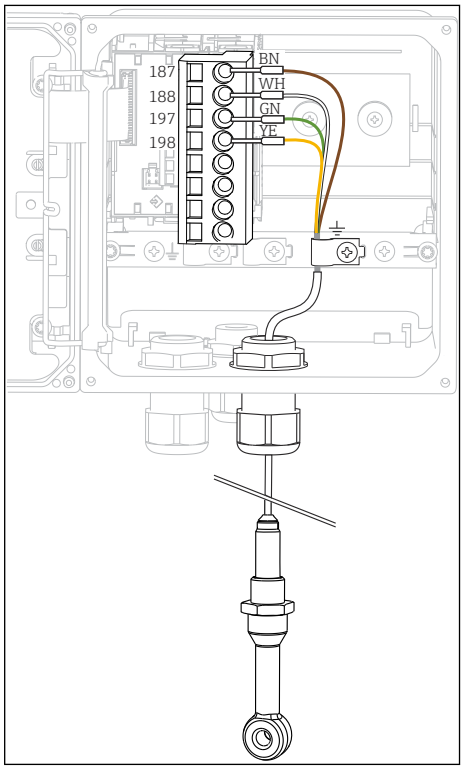

24 *In-device view (sensor module)*

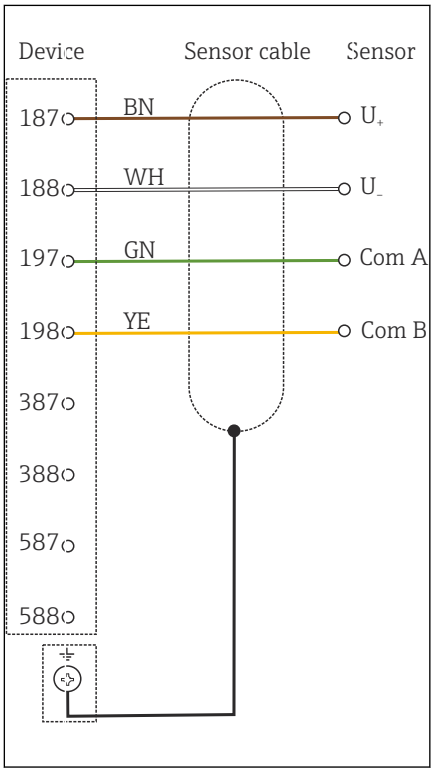

25 *Wiring diagram*

CLS50D: from serial numbers J3xxxx05LI0
CLS54D: from serial numbers H9xxxx05LI1

Analog pH/ORP sensors

Glass electrodes, with PML (symmetrical)

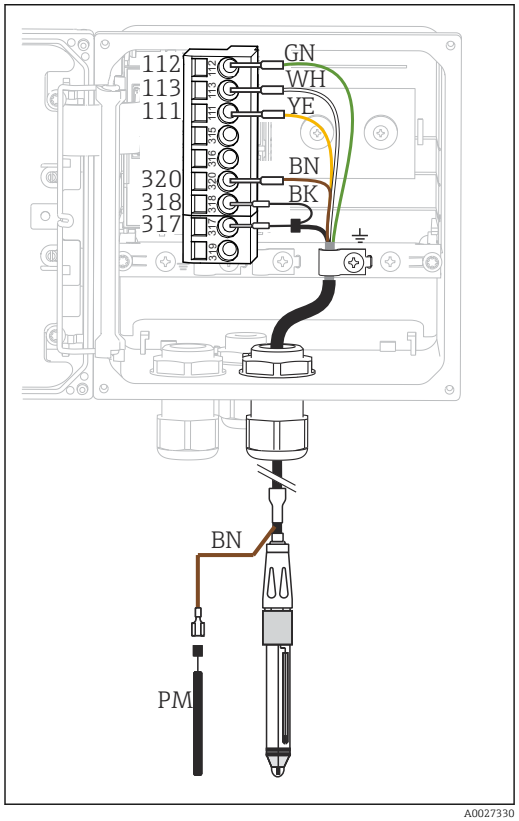

26 *In-device view (sensor module)*

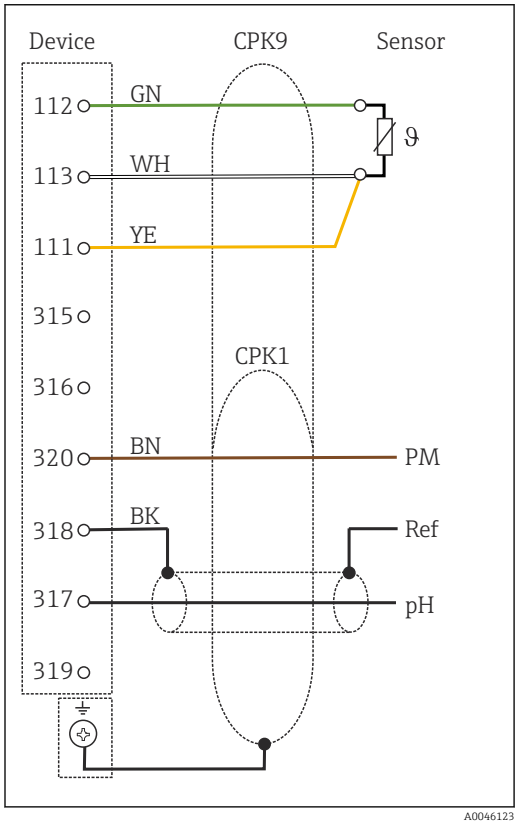

27 *Wiring diagram*

Glass electrodes, without PML (asymmetrical)

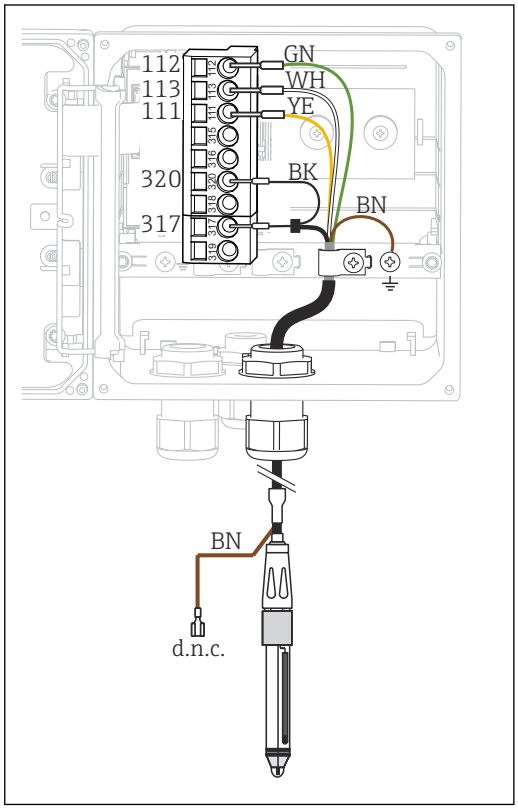

28 *In-device view (sensor module)*

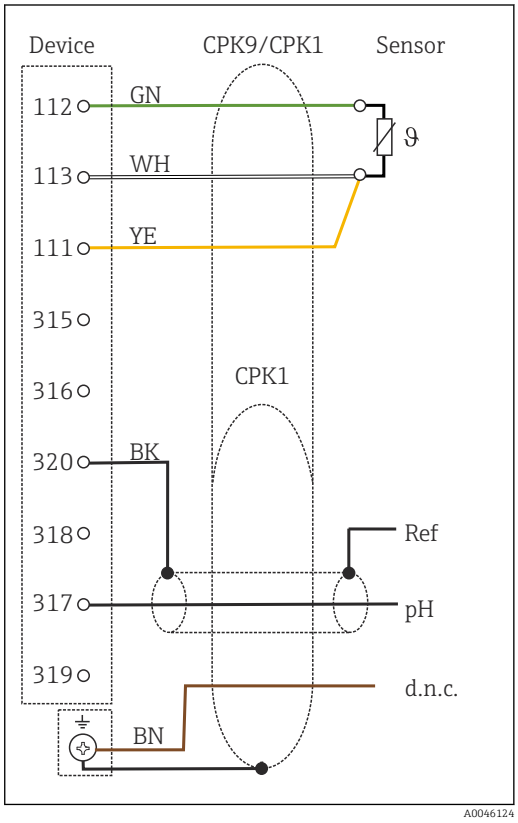

29 *Wiring diagram*

ISFET sensors, with PML (symmetrical)

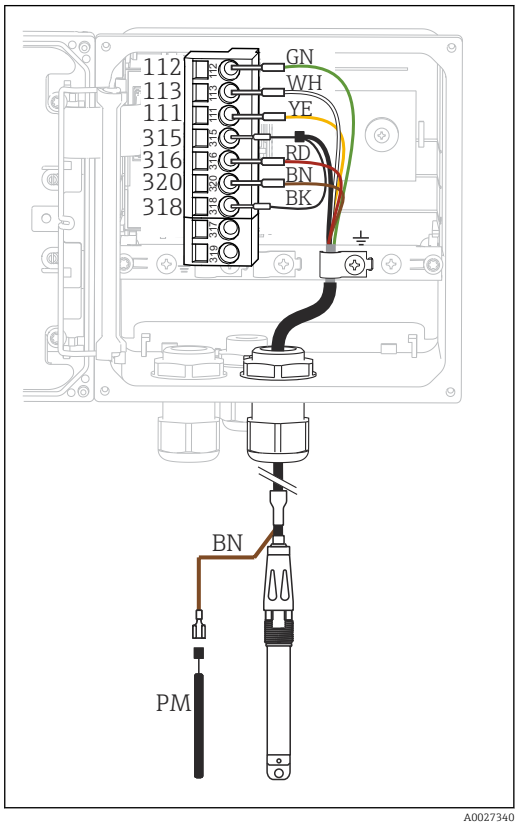

30 *In-device view (sensor module)*

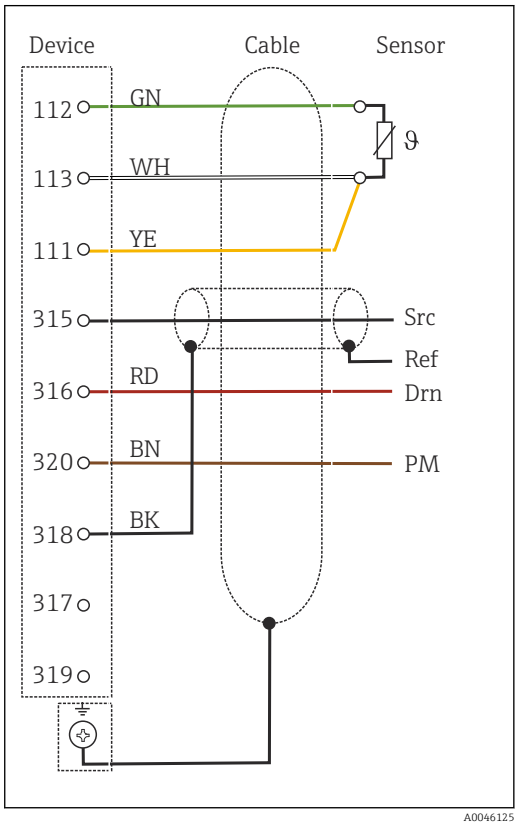

31 *Wiring diagram*

ISFET sensors, without PML (asymmetrical)

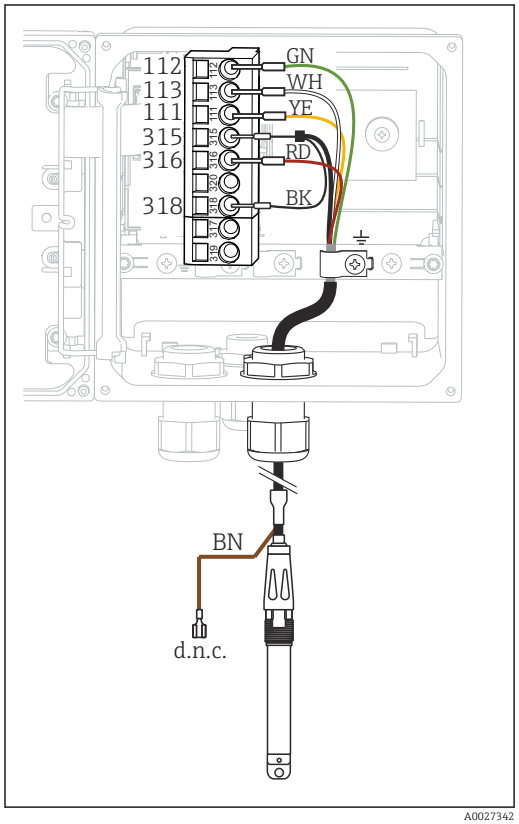

32 *In-device view (sensor module)*

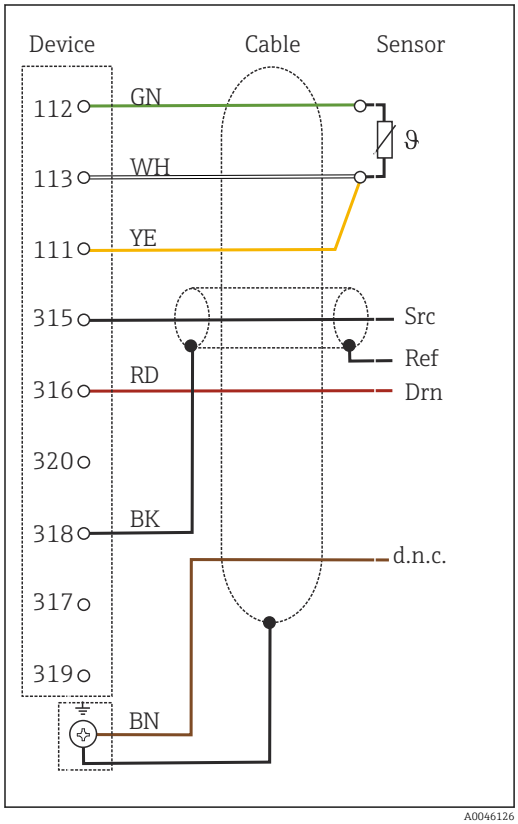

33 *Wiring diagram*

pH enamel electrodes

With PML (symmetrical)
Pfaudler electrode, absolute
Type 03 / type 04

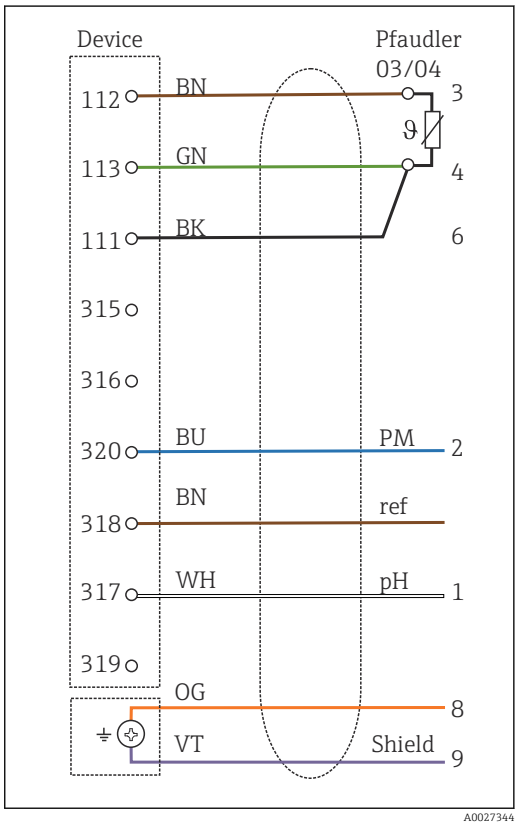

34 *Wiring diagram*

With PML (symmetrical)
Pfaudler electrode, relative
Type 18 / type 40

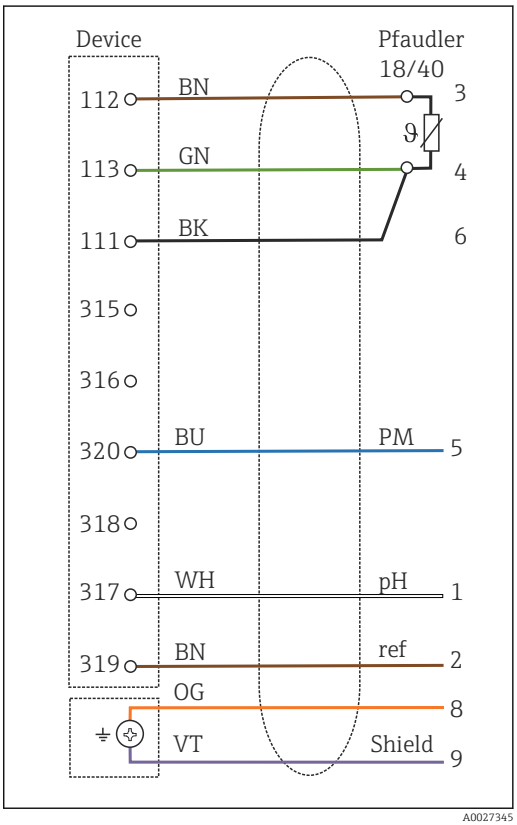

35 *Wiring diagram*

With PML (symmetrical)
pH-Reiner

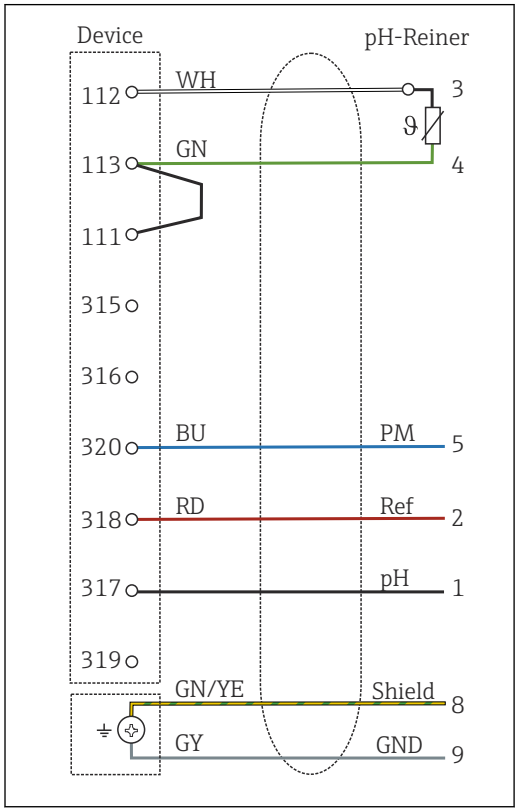

36 *Wiring diagram*

Without PML (asymmetrical)
Pfaudler electrode, absolute
Type 03 / type 04

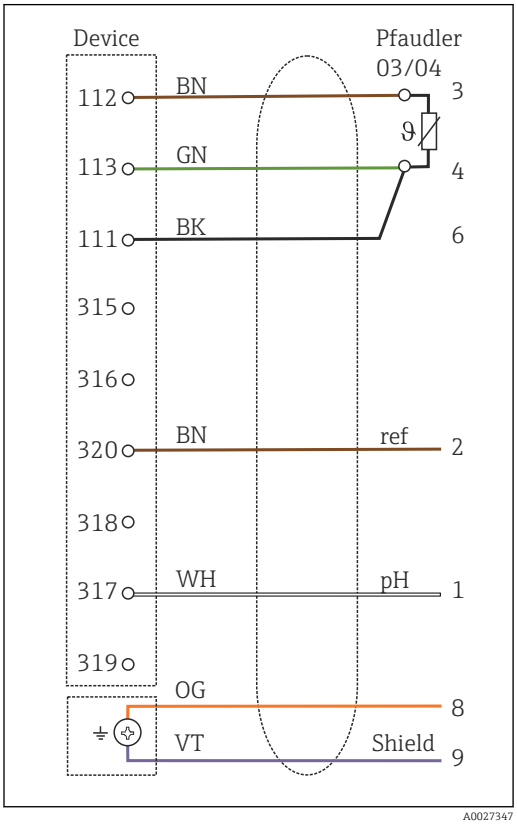

37 *Wiring diagram*

Single electrodes (e.g. CPS64 glass or antimony), **without PML (asymmetrical)**

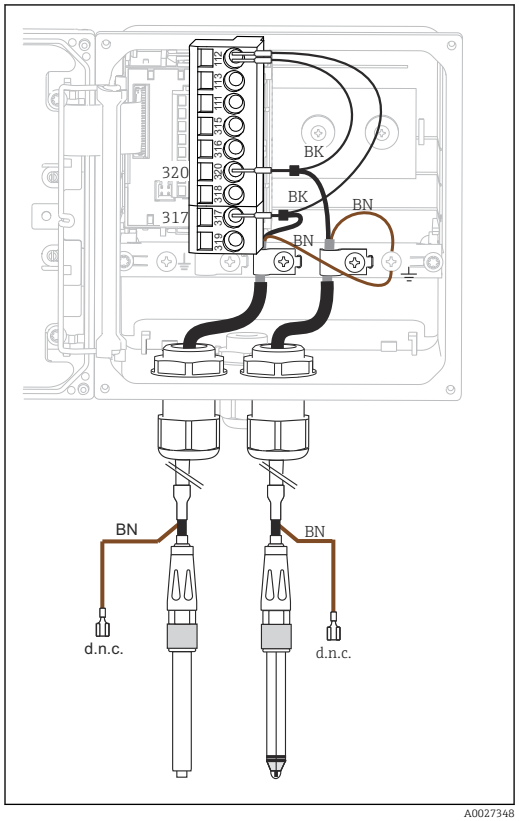

38 *In-device view (sensor module)*

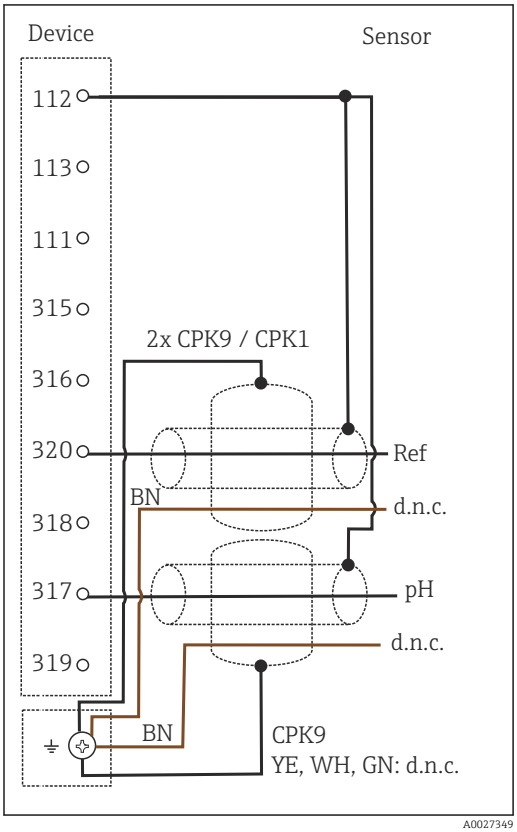

39 *Wiring diagram*

Glass electrode and ORP sensor for rH measurement

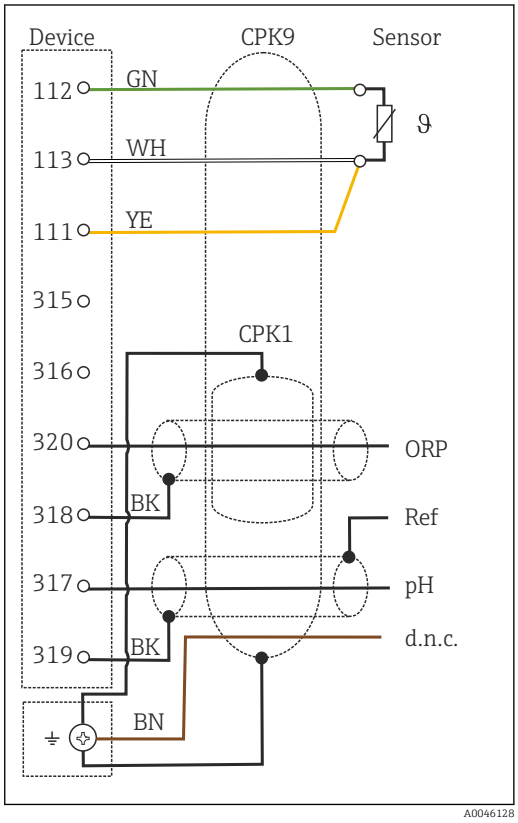

For rH measurement, connect a pH sensor (e.g. CPS11 with CPK9 sensor cable) **and** an ORP sensor (e.g. CPS12 with CPK1 sensor cable).

40 Wiring diagram

Analog conductivity sensors

Sensors with conductive measurement of conductivity, two-electrode sensors

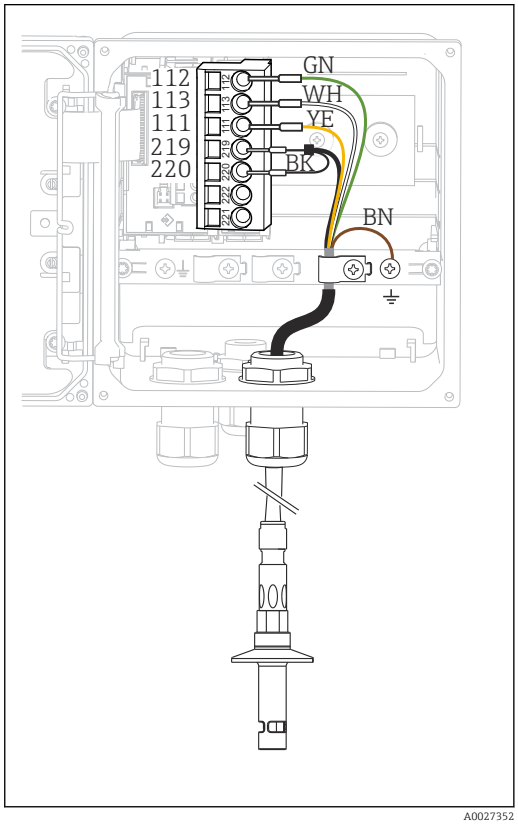

41 In-device view (sensor module)

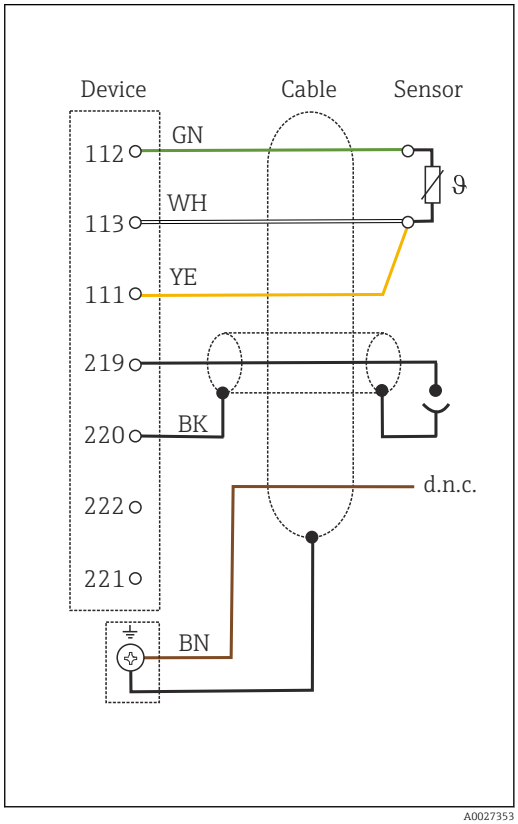

42 Wiring diagram

Sensors with conductive measurement of conductivity, four-electrode sensors

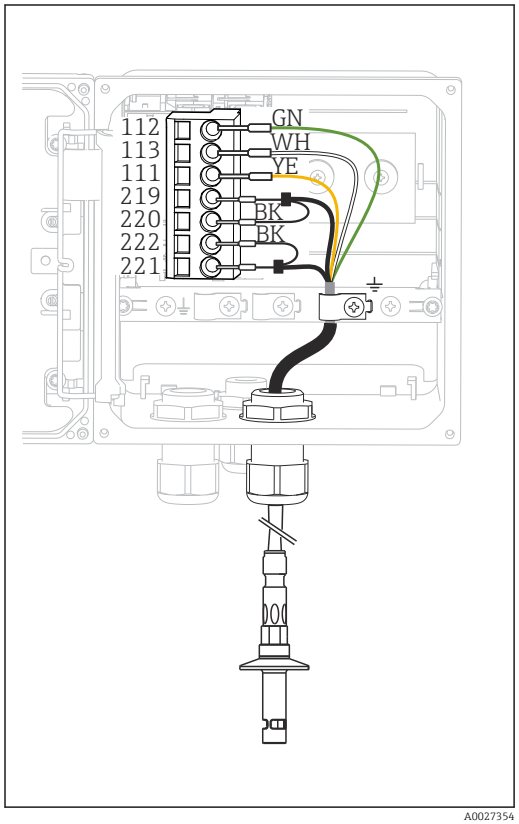

43 *In-device view (sensor module)*

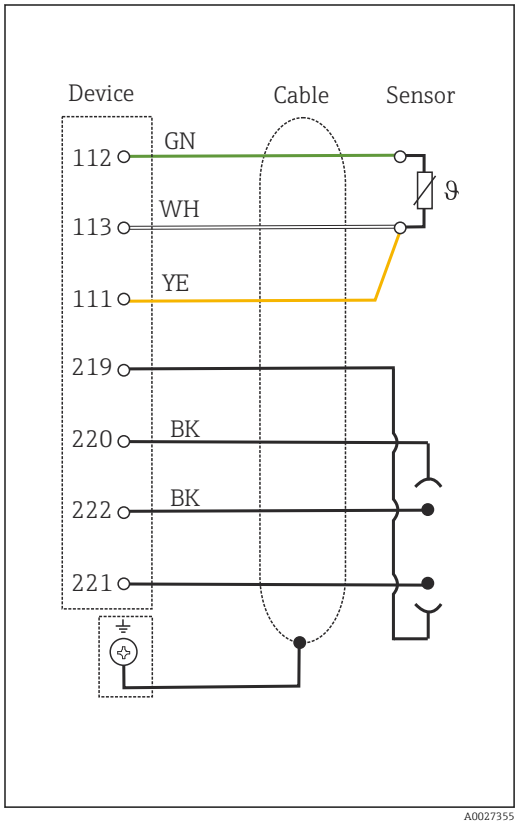

44 *Wiring diagram*

Sensors with inductive measurement of conductivity

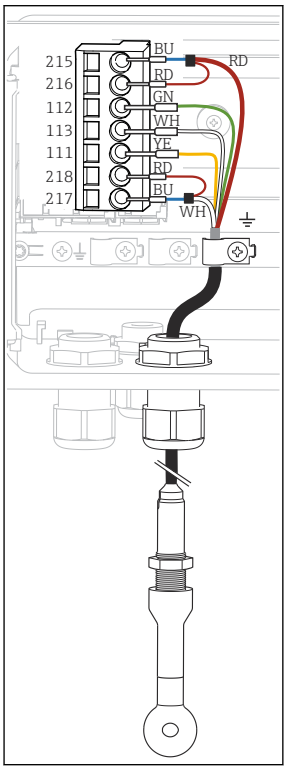

45 *In-device view (sensor module)*

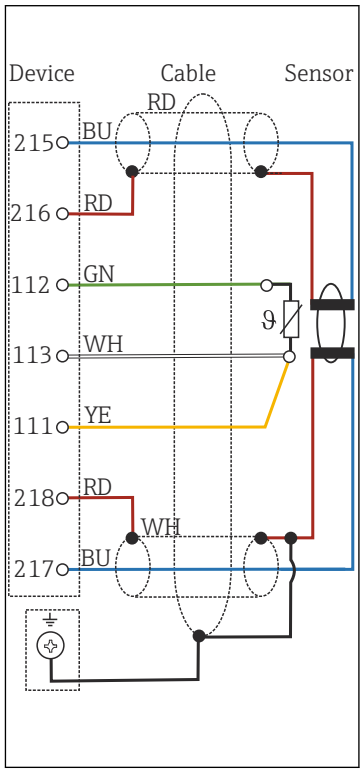

46 *Wiring diagram CLS50*

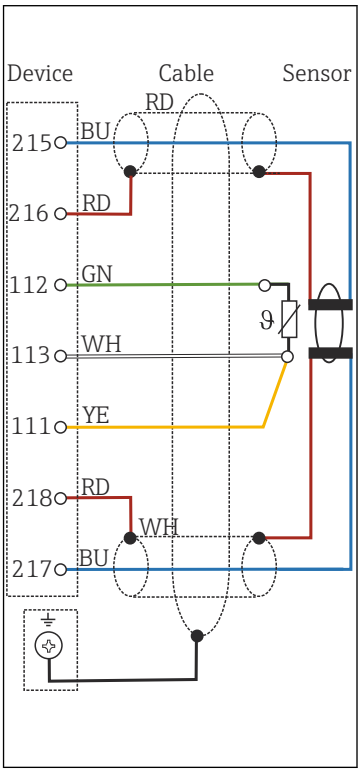

47 *Wiring diagram CLS54*

Performance characteristics

Response time of current output

t_{90} = max. 500 ms for an increase from 4 to 20 mA

Memosens measurement error

Thanks to digital data transmission, the measured value supplied by the sensor is passed on exactly at the sensor input. The accuracy depends solely on the connected sensor and the quality of its adjustment.

Tolerance, current outputs

Additionally 25 µA

Repeatability

→ Documentation of the connected sensor

Temperature compensation, conductivity

Types of compensation	Range
None	α = 0.00 to 20.00 %·K^{-1}
Linear NaCl as per IEC 746-3	0 to 100 °C (32 to 212 °F)
Natural water as per IEC 7888	0 to 35 °C (32 to 95 °F)
Ultrapure water NaCl	0 to 100 °C (32 to 212 °F)
Ultrapure water HCl (also for NH_3)	0 to 60 °C (32 to 140 °F)
4 user-definable tables [1]	

1) With the "Advanced version" or "Advanced features" firmware package

Temperature adjustment

Temperature offset	−5 to +5 °C (23 to 41 °F)

Installation

Installation requirements

Mounting plate

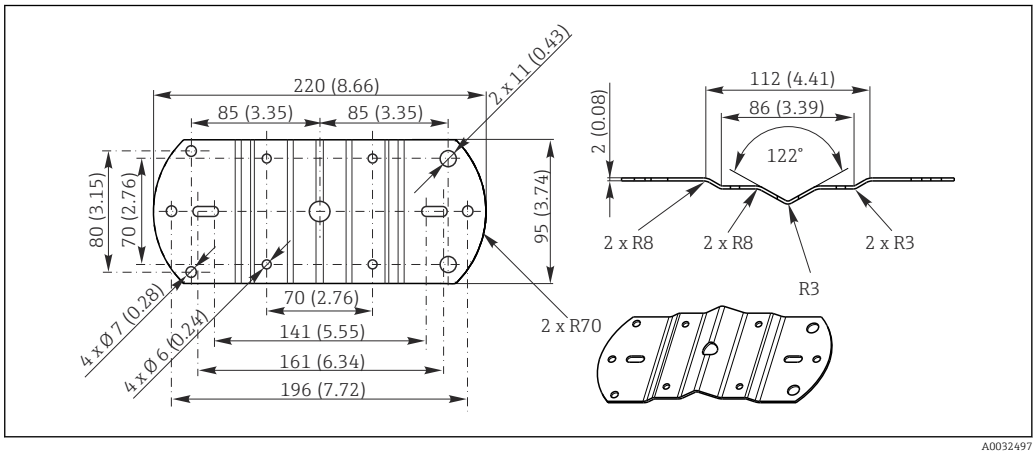

48 *Dimensions in mm (inch)*

Weather protection cover

NOTICE

Effect of climatic conditions: rain, snow, direct sunlight

Device damage to total device failure is possible!

▶ When installing outside, always use the weather protection cover. (→ 39)

For transmitter with plastic housing

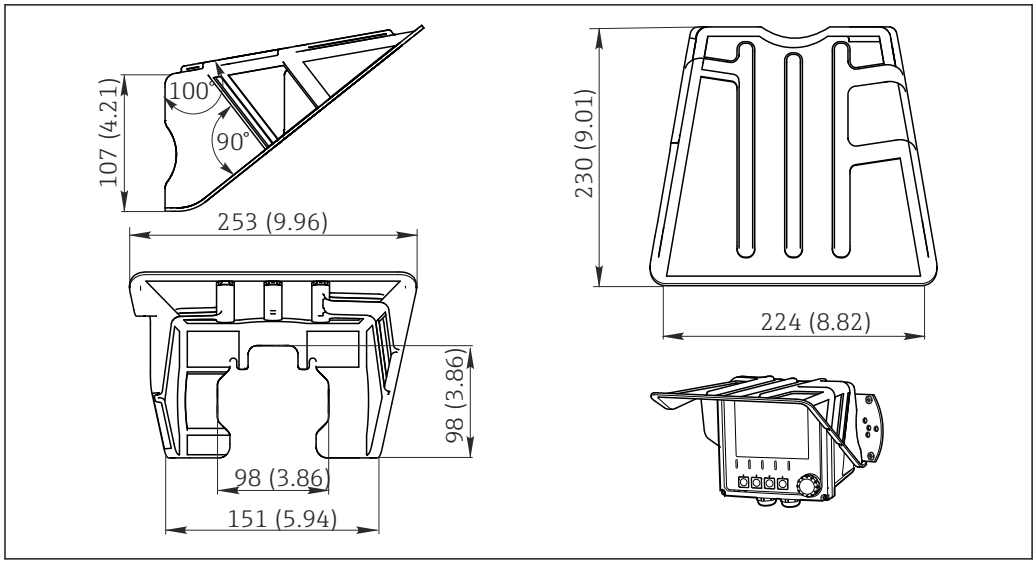

49 *Dimensions in mm (inch)*

For transmitter with stainless steel housing

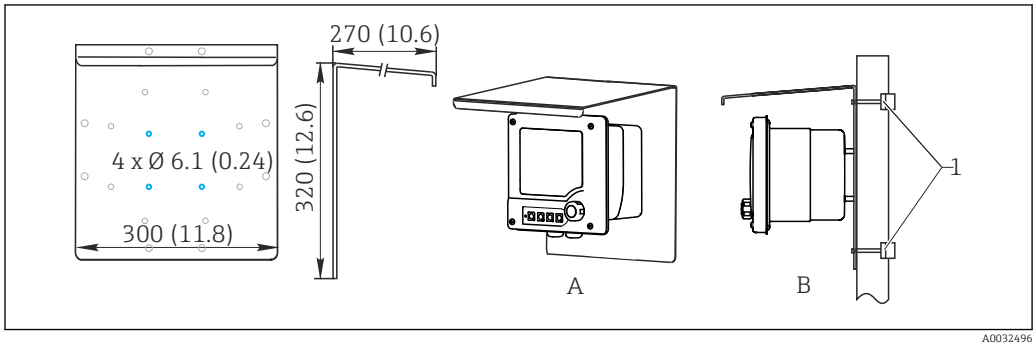

50 *Dimensions in mm (inch)*

Installation in hazardous areas

CM42-*E/I/J/K

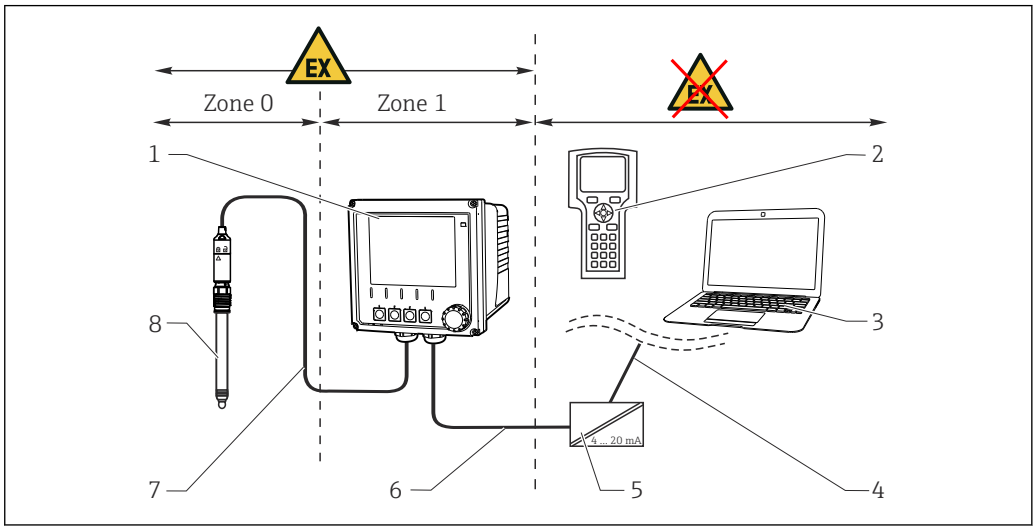

51 *Installation in hazardous area Ex ib (ia Ga)*

1	*Transmitter*	5	*Active barrier, e.g. RN221*
2	*HART handheld terminal*	6	*Supply and signal circuit Ex ib (4 to 20 mA)*
3	*FieldCare via PROFIBUS/FOUNDATION Fieldbus*	7	*Intrinsically safe sensor circuit Ex ia*
4	*Signal line HART/PROFIBUS/FOUNDATION Fieldbus*	8	*Hazardous area version of sensor*

CM42-*F

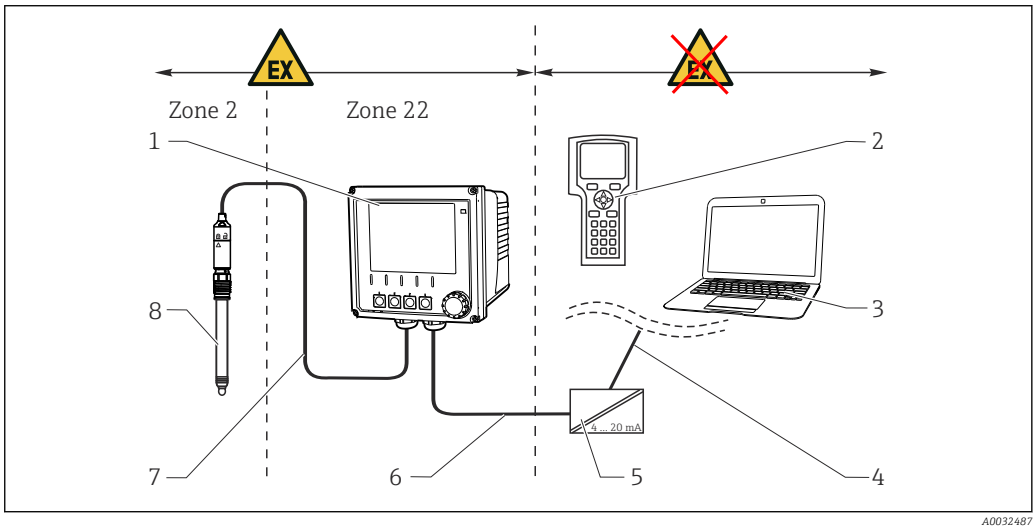

52 *Installation in hazardous area Ex tc (ic)*

1	*Transmitter*	5	*Active barrier, e.g. RN221*
2	*HART handheld terminal*	6	*Supply and signal circuit (4 to 20 mA)*
3	*FieldCare via PROFIBUS/FOUNDATION Fieldbus*	7	*Intrinsically safe sensor circuit*
4	*Signal line HART/PROFIBUS/FOUNDATION Fieldbus*	8	*Hazardous area version of sensor*

CM42-*V

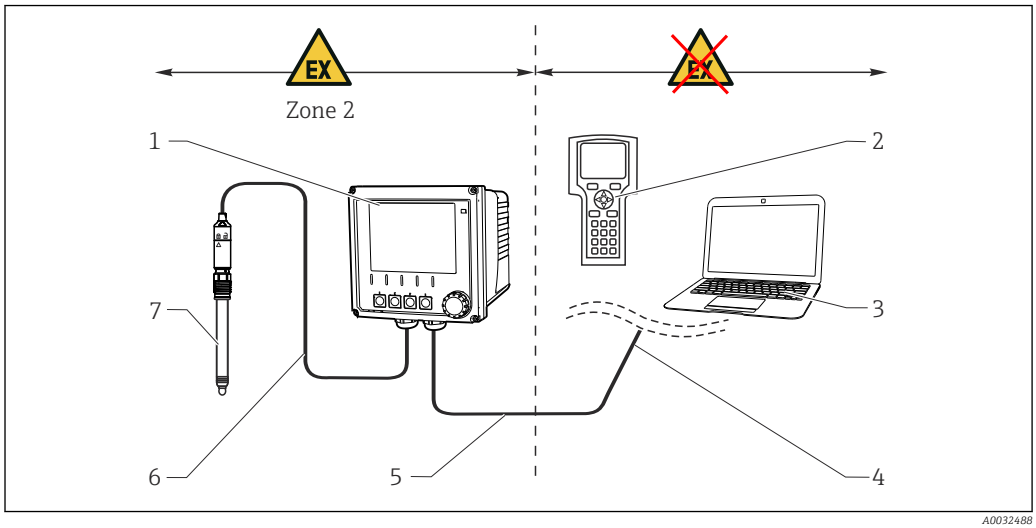

53 *Installation in hazardous area Ex nA (ic)*

1 *Transmitter*
2 *HART handheld terminal*
3 *FieldCare via PROFIBUS/FOUNDATION Fieldbus*
4 *Signal line HART/PROFIBUS/FOUNDATION Fieldbus*
5 *Supply and signal circuit Ex nA (4 to 20 mA)*
6 *Intrinsically safe sensor circuit Ex ic*
7 *Hazardous area version of sensor*

CM42-*P/S

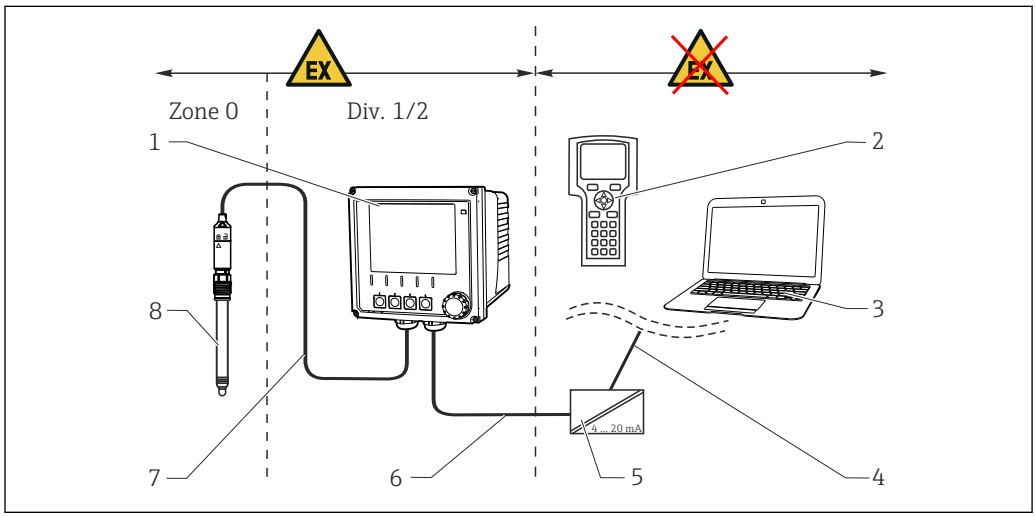

54 *Installation in hazardous area FM/CSA*

1 *Transmitter*
2 *HART handheld terminal*
3 *FieldCare via PROFIBUS/FOUNDATION Fieldbus*
4 *Signal line HART/PROFIBUS/FOUNDATION Fieldbus*
5 *Active barrier, e.g. RN221*
6 *Supply and signal circuit (4 to 20 mA)*
7 *Intrinsically safe sensor circuit*
8 *Hazardous area version of sensor*

CM42-*U

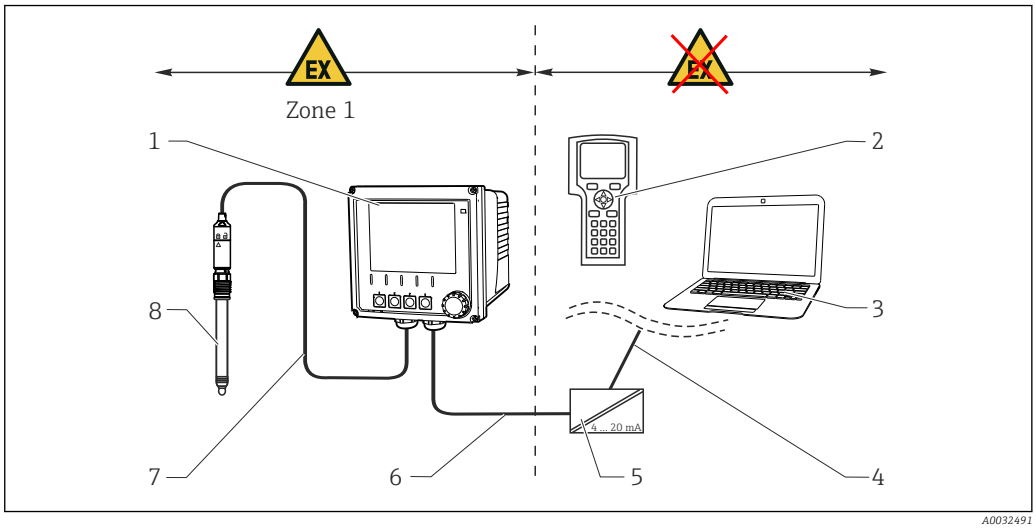

55 *Installation in hazardous area JPN*

1 *Transmitter*
2 *HART handheld terminal*
3 *FieldCare*
4 *HART signal line*
5 *Active barrier, e.g. RN221*
6 *Supply and signal circuit (4 to 20 mA)*
7 *Intrinsically safe sensor circuit*
8 *Hazardous area version of sensor*

Installation options

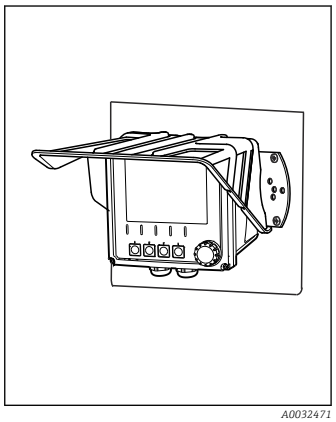

56 *Wall mounting*
optional weather protection cover

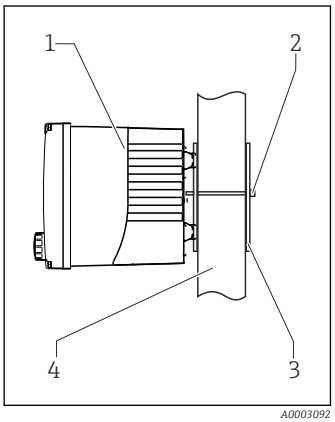

57 *Post mounting*

1 *Liquiline*
2, 3 *Mounting plate (1x accessory)*
4 *Pipe/post (circular/square)*

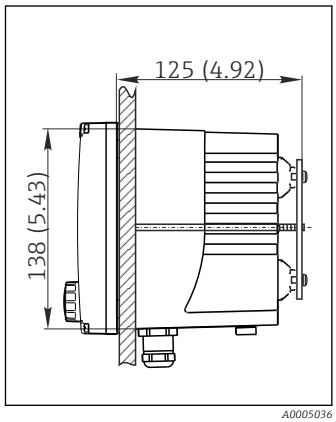

58 *Panel mounting*

		Wall mounting	Mounting on a pipe	Panel mounting
	**Plastic housing**			
	Without weather protection cover	Mounting plate: standard	Mounting kit: 51518263	Installation kit: 51518173
	With weather protection cover	Protective cover: 51517382	Mounting kit: 51518263 Protective cover: 51517382	
	**Stainless steel housing**			
	Without weather protection cover	Mounting plate: standard	Mounting kit: 51518286	Installation kit: 51518284
	With weather protection cover	Protective cover: CYY101-A	Protective cover: CYY101-A Circular post attachment: 50062121	

Environment

Ambient temperature	**Non-Ex version** -30 to 70 °C (-20 to 160 °F) **Hazardous area version: ATEX (1)2G, IECEx ib Gb [ia Ga], NEPSI ib Gb [ia Ga], EAC Ex ib Gb [ia Ga]** –20 to 50 °C (T6) –20 to 55 °C (T4) **ATEX II 3D tc [ic], ATEX/NEPSI II 3G Ex nA[ic]** –10 to 50 °C (T6) **Hazardous area version: JPN Ex ib [ia Ga] IIC T6 Gb** –20 to 55 °C (T4) **Hazardous area version: CSA Class I, II, III, Div. 1&2 or CSA C/US Class I, Div. 1&2** –20 to 50 °C (0 to 120 °F) (T6) –20 to 55 °C (0 to 130 °F) (T4) **Hazardous area version: FM Class I, Div 1&2** –20 to 50 °C (0 to 120 °F) (T6)
Storage temperature	-40 to +80 °C (-40 to 176 °F)
Relative humidity	10 to 95 %, non-condensing
Degree of protection	IP66/67 as per IEC 60529 Housing protection rating NEMA Type 4X as per UL 50E
Electromagnetic compatibility	According to IEC 61326-1 ▪ Interference immunity: Table 2 (industrial environments) ▪ Interference emission: Class B (residential environments)
Pollution degree	The product is suitable for pollution degree 3 according to EN 61010-1.

Mechanical construction

Dimensions

Plastic housing

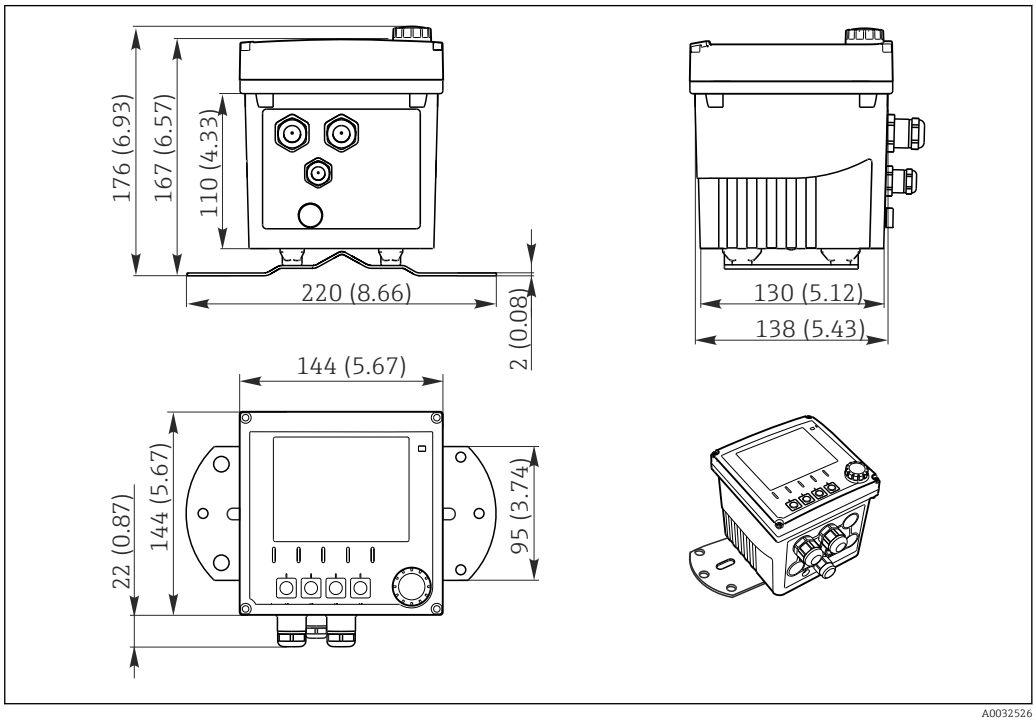

59 *Dimensions in mm (inch)*

Stainless steel housing

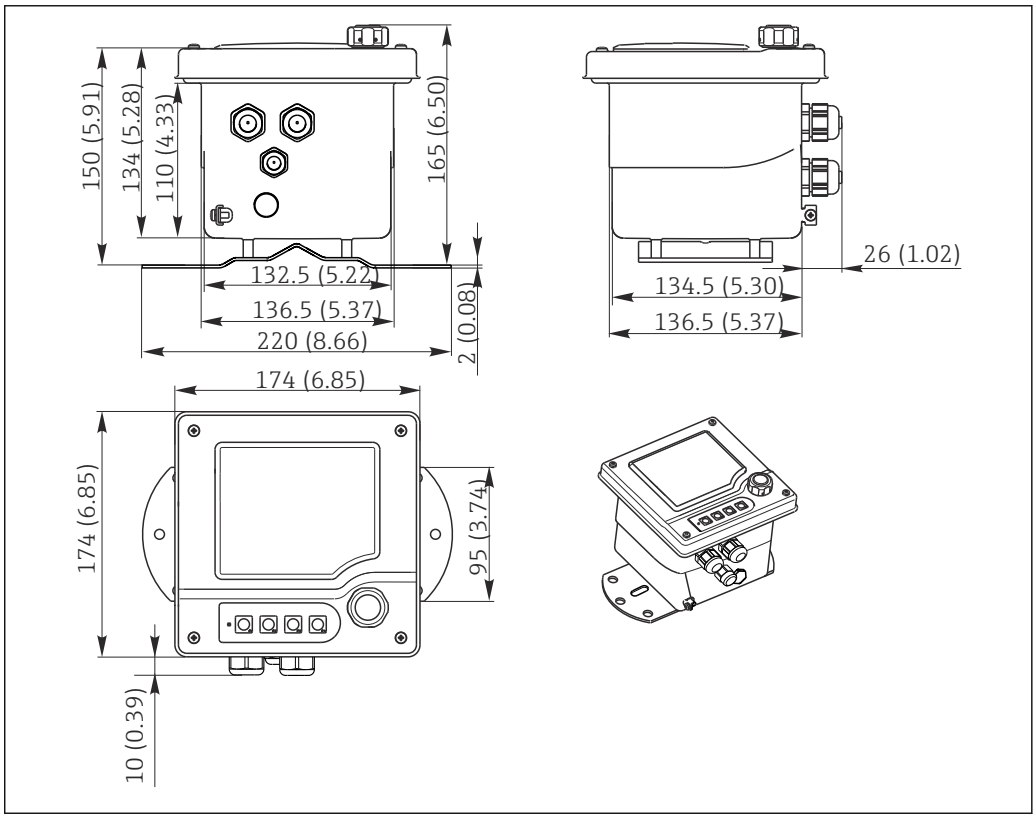

60 *Dimensions in mm (inch)*

Weight

Plastic housing
1.5 kg (3.3 lbs)

Stainless steel housing
2.1 kg (4.6 lbs)

Materials

Plastic housing	
Housing	PC-FR (polycarbonate, flame-retarding)
Housing seals	Silicone, foamed, EPDM
Stainless steel housing	
Housing	Stainless steel 1.4301 (AISI 304)
Housing seals	EPDM (ethylene propylene diene rubber)
Plastic and stainless steel housing	
Module housing	PC (polycarbonate)
Soft keys	TPE (thermoplastic elastomers)
Cable mounting rail	Stainless steel 1.4301 (AISI 304)
Display glass	PC-FR (polycarbonate, flame-retarding)
Cable glands	PA (polyamide) V0 as per UL94
Dummy plug M16 and M20	PA (polyamide) V0 as per UL94

Operability

Operation concept

The simple and structured operating concept sets new standards:
- Fewer user errors thanks to very easy operation
- Quick configuration using the Navigator
- Intuitive configuration and diagnostics thanks to plain-text display



61 *Navigator*

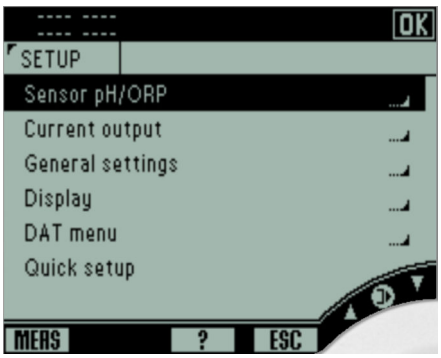

62 *Plain-text menu*

Local operation

Display

LCD display:
- FSTN technology (FSTN = Foil Super Twisted Nematic)
- Size: 94 x 76 mm (3.7 x 3.0")
- Resolution: 240 x 160 dots

Operating elements

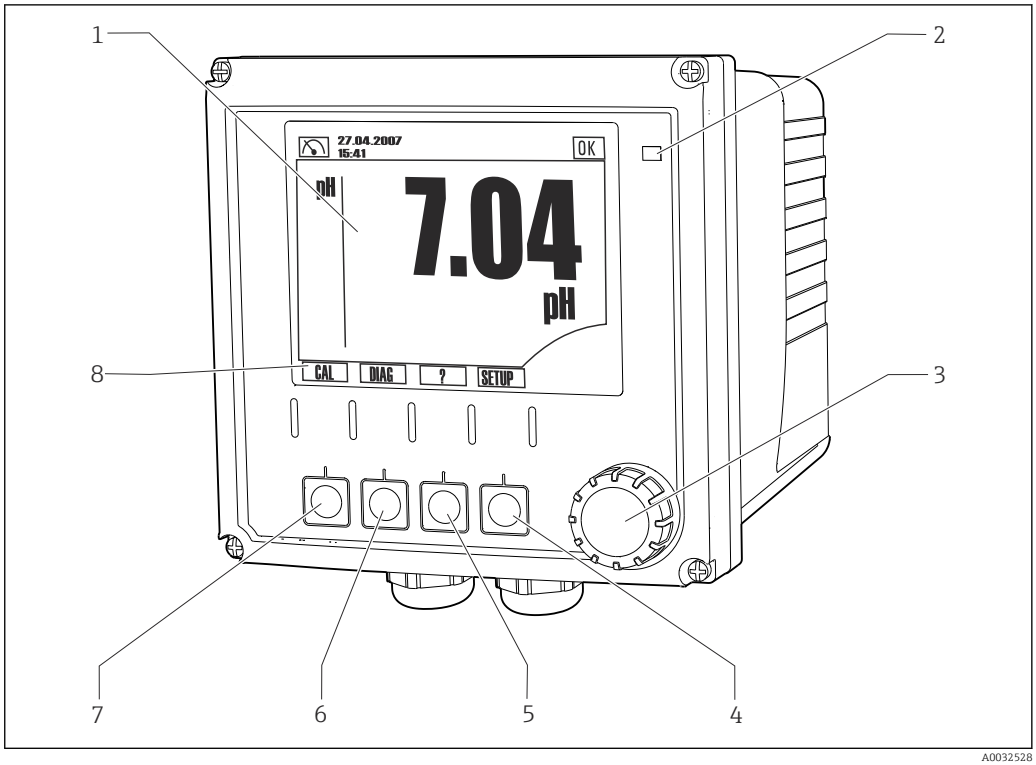

63 *Overview of operation*

1 Display, current display: pH measuring mode
2 Alarm LED
3 Navigator
4-7 Soft keys
8 Displays the soft key function (menu-dependent)

Language packages

The language selected in the product structure is the operating language preset at the factory.
- English (US)
- German
- Chinese (Simplified, PR China)
- Czech
- Dutch
- French
- Italian
- Japanese
- Polish
- Portuguese
- Russian
- Spanish
- Swedish
- Korean

The availability of other languages can be checked via the product structure at www.endress.com/CM42.

Remote operation

Via HART protocol

Example: Connection to a HART modem

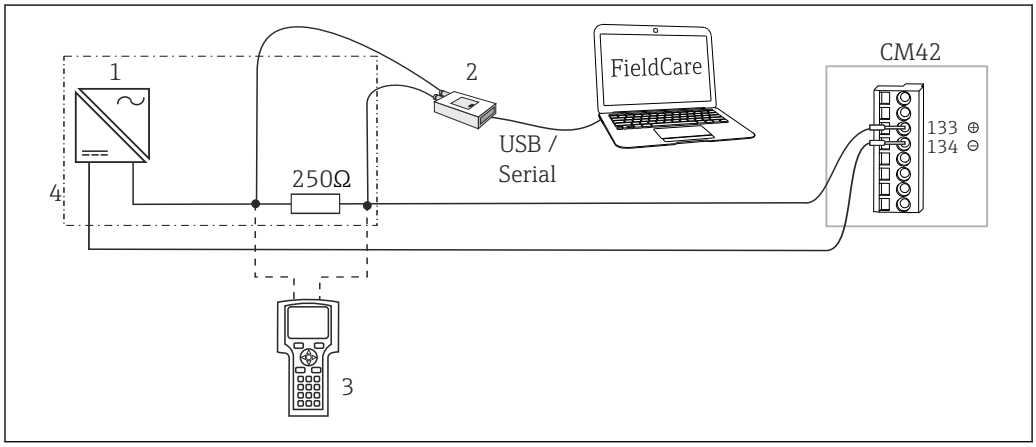

64 *HART system integration without PLC*

1 *Power unit 24 V*
2 *HART modem for connection to PC, e.g. FXA195 (switch position "on" substitutes the resistor)*
3 *HART handheld terminal*
4 *Power unit 24 V, with integrated communication load (alternative to 1)*

Via PROFIBUS-PA

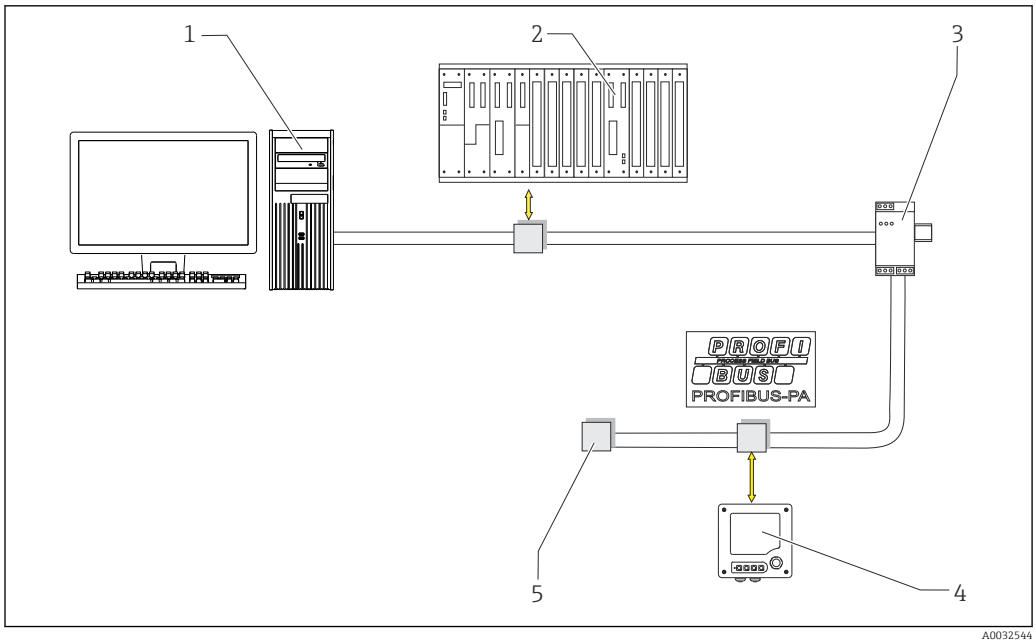

65 *PROFIBUS system integration*

1 *PC with operating software*
2 *Programmable logic controller (PLC)*
3 *Segment coupler*
4 *Liquiline CM42*
5 *Terminating resistor*

Via FOUNDATION Fieldbus

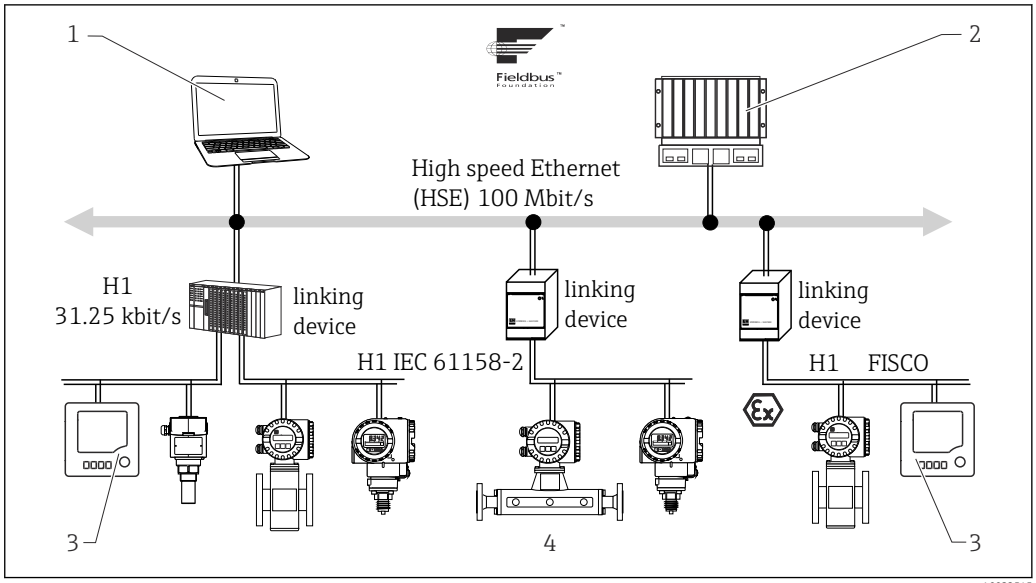

66 *System architecture with associated components*

1 Visualization and monitoring, e.g. with FieldCare and diagnostics software
2 Field Controller
3 Liquiline CM42
4 Up to 32 devices per segment

Certificates and approvals

CE mark

The product meets the requirements of the harmonized European standards. As such, it complies with the legal specifications of the EU directives. The manufacturer confirms successful testing of the product by affixing to it the CE mark.

Ex approvals

Depending on version:
- INMETRO Ex ib [ia Ga] IIC T6 Gb
- ATEX II (1)2G Ex ib [ia Ga] IIC T4/T6 Gb
- ATEX II 3D Ex tc [ic IIC Gc] IIIC T85°C Dc
- IECEx ib (ia Ga) IIC T6 Gb
- NEPSI Ex ib [ia Ga] IIC T4/T6 Gb
- EAC 1Ex ib [ia Ga] IIC T6/T4 Gb X
  Zone 1, connected sensors in Zone 0
- UK Ex II (1)2G Ex ib[ia Ga] IIC T6/T4 Gb
- KOR Ex ib [ia Ga] IIC T6/T4 Gb
- FM IS NI Cl.I, Div. 1&2, Gr. A-D
- CSA IS NI Cl.I, II, III, Div. 1&2, Gr. A-G
- JPN Ex ib [ia Ga] IIC T6 Gb
- ATEX/NEPSI II 3G Ex nA(ic) IIC T6
- ATEX II (2)3G Ex nA [ia Ga] IIC T6 Gc
- NEPSI Ex nA [ia Ga] IIC T6 Gc

Test reports

Depending on the version, a test certificate 3.1 in accordance with EN 10204 is supplied.

External standards and guidelines

The product has been certified in accordance the TP TC 012/2011 directive applicable in the Eurasian Economic Union (EAEU). The EAC conformity mark has been affixed to the product.

Ordering information

Product page

Product Configurator

1. **Configure**: Click this button on the product page.
2. Select **Extended selection**.
   ↳ The Configurator opens in a separate window.
3. Configure the device according to your requirements by selecting the desired option for each feature.
   ↳ In this way, you receive a valid and complete order code for the device.
4. **Accept**: Add the configured product to the shopping cart.

For many products, you also have the option of downloading CAD or 2D drawings of the selected product version.

5. **CAD**: Open this tab.
   ↳ The drawing window is displayed. You have a choice between different views. You can download these in selectable formats.

Scope of delivery

The scope of delivery comprises:
- 1 transmitter in the version ordered
- 1 mounting plate incl. 4 flat head screws
- 1 set of adhesive labels (nameplate, terminal connection signs)
- 1 test certificate according to EN 10204-3.1 (optional)
- Operating Instructions Part 1 and 2, BA00381C and BA00382C, in the language ordered
- 1 manufacturer's certificate

Accessories

The following are the most important accessories available at the time this documentation was issued.

Listed accessories are technically compatible with the product in the instructions.

1. Application-specific restrictions of the product combination are possible.
   Ensure conformity of the measuring point to the application. This is the responsibility of the operator of the measuring point.
2. Pay attention to the information in the instructions for all products, particularly the technical data.
3. For accessories not listed here, please contact your Service or Sales Center.

Device-specific accessories

Mounting kits

Post retainer for plastic housing
- 1 mounting plate
- 2 threaded bolts M5x75 mm A2
- 2 hexagonal nuts M5 A2, DIN 934
- 2 spring washers A2 DIN127, form B5 (M5)
- 2 washers A 5.3, DIN125 A2
- Order No. 51518263

Post retainer for stainless steel housing
- 1 mounting plate
- 2 threaded bolts M5x75 mm A2
- 2 hexagonal nuts M5 A2, DIN 934
- 2 spring washers A2 DIN127, form B5 (M5)
- 2 washers A 5.3, DIN125 A2
- Order No. 51518286

Panel mounting set for plastic housing
For panel cutout 138x138 mm (5.43x5.43 inch)
- 1 panel mounting seal
- 2 tensioning screws M6x150 mm
- 4 hexagonal nuts M6, DIN934 A2
- 4 spring washers, A2 DIN127, form B6
- 4 washers A6.4, DIN125 A2
- Order No. 51518173

Panel mounting set for stainless steel housing
For panel cutout 138x138 mm (5.43x5.43 inch)
- 1 panel mounting seal
- 2 tensioning screws M6x150 mm
- 4 hexagonal nuts M6, DIN934 A2
- 4 spring washers, A2 DIN127, form B6
- 4 washers A6.4, DIN125 A2
- Order No. 51518284

Weather protection cover

Weather protection cover for plastic housing
Order number: 51517382

Weather protection cover for stainless steel housing
Order number: CYY101-A

Measuring cables

Memosens data cable CYK10
- For digital sensors with Memosens technology

Technical Information TI00118C

Memosens data cable CYK11
- Extension cable for digital sensors with Memosens protocol

Technical Information TI00118C

Measuring cable CPK9
- Terminated measuring cable for connecting analog sensors with TOP68 plug-in head
- Selection in accordance with product structure

Technical Information TI00118C

Measuring cable CPK12
- Terminated measuring cable for connecting analog ISFET sensors with TOP68 plug-in head
- Selection in accordance with product structure

Measuring cable CYK71
- Unterminated cable for connecting analog sensors and for extending sensor cables
- Sold by the meter, order numbers:
  - Non-Ex version, black: 50085333
  - Ex-version, blue: 50085673

Measuring cable CLK6
- Extension cable for inductive conductivity sensors, for extension via VBM junction box
- Sold by the meter, order number: 71183688

Sensors

Glass electrodes

Memosens CPS11E
- pH sensor for standard applications in process and environmental engineering
- Digital with Memosens 2.0 technology

Technical Information TI01493C

Memosens CPS41E
- pH sensor for process technology
- With ceramic junction and KCl liquid electrolyte
- Digital with Memosens 2.0 technology

Technical Information TI01495C

Memosens CPS71E
- pH sensor for chemical process applications
- With ion trap for poison-resistant reference
- Digital with Memosens 2.0 technology

Technical Information TI01496C

Memosens CPS91E
- pH sensor for heavily polluted media
- With open aperture
- Digital with Memosens 2.0 technology

Technical Information TI01497C

Memosens CPS31E
- pH sensor for standard applications in drinking water and swimming pool water
- Digital with Memosens 2.0 technology

Technical Information TI01574C

Memosens CPS61E
- pH sensor for bioreactors in life sciences and for the food industry
- Digital with Memosens 2.0 technology

Technical Information TI01566C

Memosens CPF81E
- pH sensor for mining operations, industrial water and wastewater treatment
- Digital with Memosens 2.0 technology

Technical Information TI01594C

Enamel pH electrodes

Ceramax CPS341D
- pH electrode with pH-sensitive enamel
- Meets highest demands of measuring accuracy, pressure, temperature, sterility and durability

Technical Information TI00468C

ORP sensors

Memosens CPS12E
- ORP sensor for standard applications in process and environmental engineering
- Digital with Memosens 2.0 technology

Technical Information TI01494C

Memosens CPS42E
- ORP sensor for process technology
- Digital with Memosens 2.0 technology

Technical Information TI01575C

Memosens CPS72E
- ORP sensor for chemical process applications
- Digital with Memosens 2.0 technology

Technical Information TI01576C

Memosens CPF82E
- ORP sensor for mining operations, industrial water and wastewater treatment
- Digital with Memosens 2.0 technology

Technical Information TI01595C

Memosens CPS92E
- ORP sensor for use in heavily polluted media
- Digital with Memosens 2.0 technology

Technical Information TI01577C

Memosens CPS62E
- ORP sensor for hygienic and sterile applications
- Digital with Memosens 2.0 technology

Technical Information TI01604C

pH ISFET sensors

Memosens CPS47E
- ISFET sensor for pH measurement
- Digital with Memosens 2.0 technology

Technical Information TI01616C

Memosens CPS77E
- Sterilizable and autoclavable ISFET sensor for pH measurement
- Digital with Memosens 2.0 technology

Technical Information TI01396

Memosens CPS97E
- ISFET sensor for pH measurement
- Digital with Memosens 2.0 technology

Technical Information TI01618C

Combined pH/ORP sensors

Memosens CPS16E
- pH/ORP sensor for standard applications in process technology and environmental engineering
- Digital with Memosens 2.0 technology

Technical Information TI01600C

Memosens CPS76E
- pH/ORP sensor for process technology
- Digital with Memosens 2.0 technology

Technical Information TI01601C

Memosens CPS96E
- pH/ORP sensor for heavily polluted media and suspended solids
- Digital with Memosens 2.0 technology

Technical Information TI01602C

Conductivity sensors with inductive measurement of conductivity

Indumax CLS50D / CLS50
- High-durability inductive conductivity sensor
- For standard and hazardous area applications
- With Memosens technology

Technical Information TI00182C

Indumax CLS52
- Inductive conductivity sensor
- Short response times for the food industry

Technical Information TI00167C

Indumax CLS54D
- Inductive conductivity sensor
- With certified, hygienic design for food, beverages, pharmaceuticals, and biotechnology

Technical Information TI00508C

Indumax CLS54
- Inductive conductivity sensor
- For standard and hazardous area applications, available with hygienic design for food, beverages, pharmaceuticals and biotechnology

Technical Information TI00400C

Conductivity sensors with conductive measurement of conductivity

Condumax CLS12
- Conductive conductivity sensor
- For pure water, Ex and high-temperature applications

Technical Information TI00082C

Condumax CLS13
- Conductive conductivity sensor
- For pure water, Ex and high-temperature applications

Technical Information TI00083C

Memosens CLS15E
- Digital conductivity sensor for measurements in pure and ultrapure water
- Conductive measurement
- With Memosens 2.0

Technical Information TI01526C

Memosens CLS16E
- Digital conductivity sensor for measurements in pure and ultrapure water
- Conductive measurement
- With Memosens 2.0

Technical Information TI01527C

Condumax CLS19
- Cost-effective, conductive conductivity sensor
- For applications with pure and ultrapure water

Technical Information TI00110C

Memosens CLS21E
- Digital conductivity sensor for media with medium or high conductivity
- Conductive measurement
- With Memosens 2.0

Technical Information TI01528C

Memosens CLS82E
- Hygienic conductivity sensor
- Digital with Memosens 2.0 technology

Technical Information TI01529C

Oxygen sensors

Memosens COS22E
- Hygienic amperometric oxygen sensor with maximum measurement stability over multiple sterilization cycles
- Digital with Memosens 2.0 technology

Technical Information TI01619C

Memosens COS51E
- Amperometric oxygen sensor for water, wastewater and utilities
- Digital with Memosens 2.0 technology

Technical Information TI01620C

Memosens COS81E
- Hygienic optical oxygen sensor with maximum measurement stability over multiple sterilization cycles
- Digital with Memosens 2.0 technology

Technical Information TI01558C

Communication-specific accessory

Device Care SFE100
- Configuration of Endress+Hauser devices
- Fast and easy installation, online application updates, one-click connection to devices
- Automatic hardware identification and driver catalog update
- Device configuration with DTMs

Technical Information Device Care SFE100, TI01134S

Fieldbus connection socket
- Connection for FOUNDATION Fieldbus M20 7/8"
- Order No. 51517974

Connector M12
- Four-pin metal connector for mounting on the transmitter
- For connection to the junction box or cable socket, cable length 150 mm (5.91")
- Order No. 51502184

C-module accessories kit
- 1 capacitor for connecting the cable shield to ground potential
- Kit documentation SD00108C
- Order No. 71003097

Commubox FXA195
Intrinsically safe HART communication with FieldCare via the USB port

Technical Information TI00404F

Commubox FXA291
Connects the CDI interface of measuring devices with the USB port of the computer or laptop

Technical Information TI00405C

Wireless HART adapter SWA70
- Wireless device connection
- Easily integrated, offers data protection and transmission safety, can be operated in parallel with other wireless networks, minimum cabling complexity

Technical Information TI00061S

Field Data Manager Software MS20/21
- PC software for central data management
- Visualization of series of measurements and logbook events
- SQL database for secure data storage

FieldCare SFE500
- Universal tool for field device configuration and management
- Supplied with a complete library of certified DTMs (Device Type Manager) for operation of Endress +Hauser field devices
- Order according to product order structure

Memobase Plus CYZ71D
- PC software to support laboratory calibration
- Visualization and documentation of sensor management
- Sensor calibrations stored in database

Technical Information TI00502C

Service-specific accessories

DAT module CY42
- Function upgrade, update and memory module
- Order numbers:
  - CopyDAT, to save the configuration and copy the configuration to additional devices CY42-C1
  - FunctionDAT, to upgrade the function to 2 current outputs CY42-F1
  - FunctionDAT, to upgrade the function to "Advanced version" CY42-F2
  - SystemDAT, for software updates, extended range of languages CY42-S1

System components

RIA14, RIA16
- Field display unit for integration into 4-20 mA circuits
- RIA14 in flameproof metal enclosure

Technical Information TI00143R and TI00144R

RIA15
- Process display unit, Digital display unit for integration into 4-20 mA circuits
- Panel mounting
- With optional HART communication

Technical Information TI01043K

Active barrier

RN22 active barrier
- 1 or 2-channel active barrier for separation of 0/4 to 20 mA standard signal circuits
- 24 V DC

Technical Information TI01515K

RN42 active barrier
1-channel active barrier with a wide-range power supply for safe separation of 0/4 to 20 mA standard signal circuits

Technical Information TI01584K



Endress+Hauser

People for Process Automation

Consultas y ventas: AQUAREP · www.aquarep.com.ar · info@aquarep.com.ar · WhatsApp +54 9 11 6091-0087