TI00444C/07/EN/29.25-00
71727869
2025-10-01

Technical Information
Liquiline CM442/CM444/CM448

Multiparameter transmitter with a maximum of eight measuring channels based on digital Memosens technology



For monitoring and controlling processes in industry and the environmental sector

Applications

- Food and beverages
- Life sciences
- Water and wastewater
- Chemical industry
- Power plants
- Other industrial applications

Your benefits

- Highly flexible:
  - Able to connect up to 8 Memosens sensors
  - Mathematics functions calculate new measured values
  - Digital fieldbuses (HART, PROFIBUS, Modbus, Ethernet/IP, PROFINET) and integrated web server
  - Choice of cleaning function, controller and alarm relay
  - Optional digital or analog inputs/outputs
- Maximum process safety thanks to standardized operating concept across all devices in the Liquiline, sampler and analyzer platform
- Fast commissioning thanks to:
  - Memosens: lab-calibrated sensors & hot plug-and-play
  - Preconfigured Liquiline transmitters
  - Easy extension and adaptation

Endress+Hauser
People for Process Automation

Consultas y ventas: AQUAREP · www.aquarep.com.ar · info@aquarep.com.ar · WhatsApp +54 9 11 6091-0087

[Continued from front page]

- Minimum inventory:
  - Cross-platform, modular concept (e.g. identical modules irrespective of parameters)
  - Integration into FieldCare and W@M facilitates effective asset management

Table of contents

Function and system design 5
Measuring system 5
Application example 6

Equipment architecture 7
Slot and port assignment 7
Order of the modules 7
Basic rule for hardware upgrades 8
Determining the hardware delivery status 8
Terminal diagram 8
Device configuration using the example of a CM442-**M1A1F0* 10
Block circuit diagram CM442 11
Device configuration using the example of a CM444-**M42A1FA* 12
Block circuit diagram CM444 14
Device configuration using the example of a CM448-**26A1* 16
Block circuit diagram CM448 17

Communication and data processing 19

Reliability 19
Dependability 19
Maintainability 21
Safety 24

Input 25
Measured variables 25
Measuring ranges 25
Types of input 25
Input signal 25
Cable specification 25

Digital inputs, passive 25
Electrical specification 25
Span 25
Nominal input current 25
PFM function 25
Test voltage 25
Cable specification 25

Current input, passive 25
Span 25
Signal characterization 25
Internal resistance 25
Test voltage 26

Output 26
Output signal 26
Signal on alarm 27
Load 27
Linearization/transmission behavior 27

Digital outputs, passive 27
Electrical specification 27
External power supply 27
PFM function 27
Auxiliary voltage 27
Test voltage 27
Cable specification 27

Current outputs, active 28
Span 28
Signal characterization 28
Electrical specification 28
Cable specification 28

Relay outputs 28
Electrical specification 28
Cable specification 29

Protocol-specific data 29
HART 29
PROFIBUS DP 29
Modbus RS485 29
Modbus TCP 29
Ethernet/IP 30
PROFINET 31
Web server 32

Power supply 32
Supply voltage 32
Power consumption 32
Fuse 32
Overvoltage protection 32
Cable entries 33
Cable specification 34
Electrical connection 34
Connecting optional modules 36
Protective ground connection 38
Sensor connection 39

Performance characteristics 42
Response time 42
Reference temperature 42
Measurement error for sensor inputs 42
Measurement error for current inputs and outputs 42
Frequency tolerance of digital inputs and outputs 42
Resolution of current inputs and outputs 42
Repeatability 42

Installation 42
Installation requirements 42
Installation 43

Environment 44
Ambient temperature 44
Storage temperature 46
Relative humidity 46
Degree of protection 46
Vibration resistance 46
Electromagnetic compatibility 47

Electrical safety 47
Pollution degree 47
Pressure compensation to environment 47

Mechanical construction 47
Dimensions 47
Weight 47
Materials 48

Operability 48
display 48
Operation concept 48
Local operation 49
Remote operation 49
Language packages 49

Certificates and approvals 50

Ordering information 50
Product page 50
Product Configurator 50
Scope of delivery 50

Accessories 50
Device-specific accessories 51
Communication-specific accessory 56
Service-specific accessories 56
System components 58
Other accessories 58

Function and system design

Measuring system

The overview shows examples of measuring systems. Other sensors and assemblies can be ordered

Measuring point

A complete measuring system comprises:
- Liquiline transmitter
- Sensors with Memosens technology
- Assemblies to suit the sensors used
- Post retainer or railing (optional)
- Weather protection cover (optional)

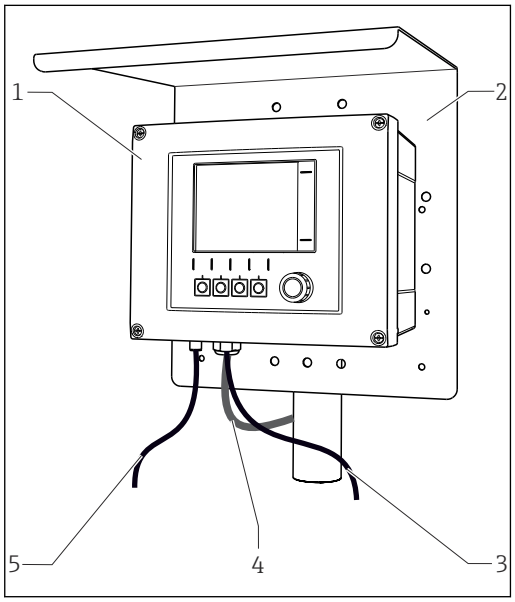

1 Measuring system (e.g. two-channel device)

1 Liquiline
2 Weather protection cover CYY101 (optional)
3, 5 Sensor cable CYK10 or fixed cable
4 Power supply cable (to be provided by the customer)

pH value or ORP

pH measurement in drinking water
- Cleanfit CPA871 retractable assembly
- Memosens CPS11E sensor
- Measuring cable CYK10

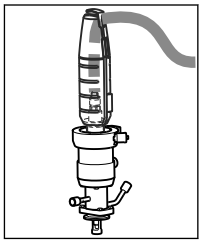

ORP in drinking water
- Dipfit CYA112 immersion assembly
- Memosens CPS12E sensor
- Measuring cable CYK10

Conductivity

Inductive conductivity measurement in wastewater treatment
- Indumax CLS50D sensor
- Sensor fixed cable

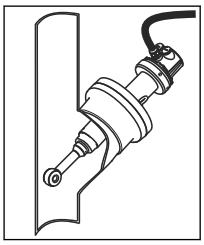

Conductive conductivity measurement in power plant cooling water
- Memosens CLS15E sensor
- Measuring cable CYK10

Oxygen

Oxygen in aeration basins
- Dipfit CYA112 immersion assembly
- CYH112 holder
- Sensor
  - COS61D (optical) with fixed cable
  - COS51E (amperometric), CYK10 cable

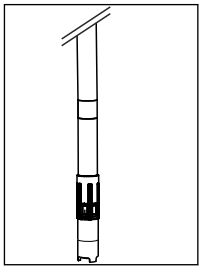

Nitrate and SAC

Nitrate in wastewater
- Sensor CAS51D-**A2 with fixed cable
- Dipfit CYA112 immersion assembly
- CYH112 holder

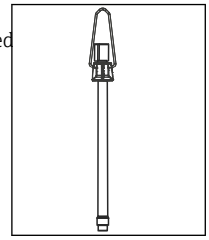

SAC in the wastewater treatment outlet
- Sensor CAS51D-**2C2 with fixed cable
- Dipfit CYA112 immersion assembly
- CYH112 holder

Turbidity and interface

Turbidity in industrial water
- Turbimax CUS51D sensor with fixed cable
- Flowfit CUA250 assembly
- CUR3 spray head (optional)

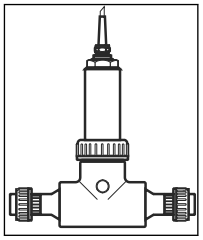

Interface in the primary clarifier
- Turbimax CUS71D sensor
- CYA112 assembly
- CYH112 holder

Disinfection

Free available chlorine (and pH) in drinking water
- CCS51D sensor
- Memosens CPS11E sensor
- Measuring cable CYK10
- CYA27 flow assembly

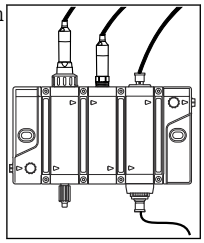

Ion-selective electrodes

Ammonium and nitrate measurement in the aeration basin
- CAS40D sensor with fixed cable
- CYH112 holder

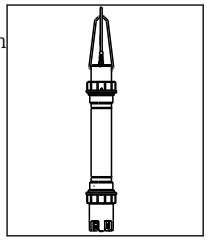

If mounting outdoors, always use the weather protection cover (see "Accessories") to protect the transmitter against weather conditions.

Application example

Measuring point at wastewater treatment plant outlet (open channel)

- Transmitter CM444-AAM44A0FF with:
  4 x Memosens, Modbus TCP, 4 x relays for cleaning/limit value, 2 x analog current input
- Flow from external measurement via current input

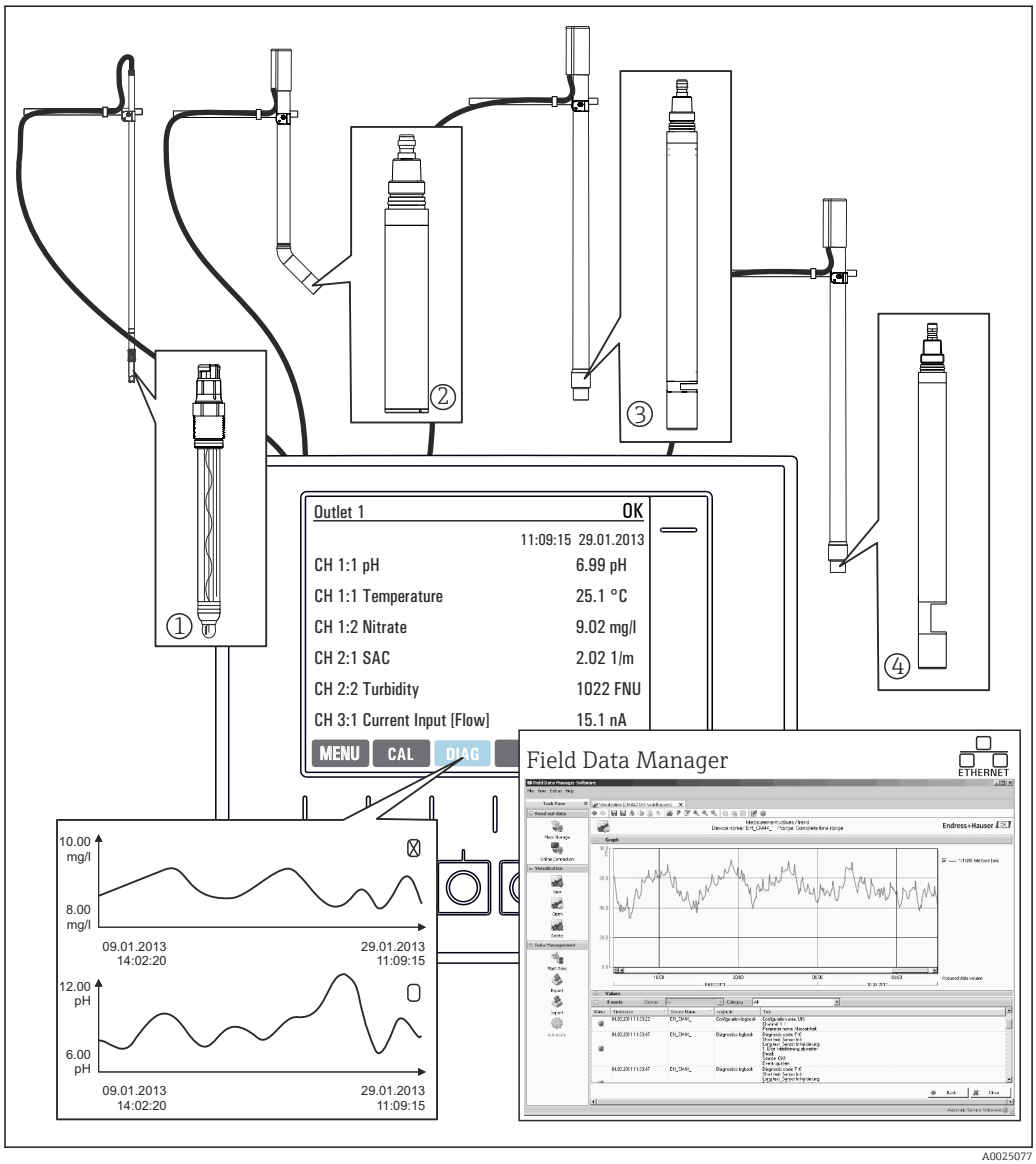

A0025077

2 *Measuring point at wastewater treatment plant outlet*

Data retention

- Storage of all measured values, incl. values of external sources, in the non-volatile memory (data logbook)
- Data called up on site via user-defined measuring menu and load curve display of the data logbook
- Transmission of data by Ethernet, CDI interface or SD card and storage in a tamper-proof database (Field Data Manager)
- Data export to CSV file (for Microsoft Excel)

Equipment architecture

Slot and port assignment

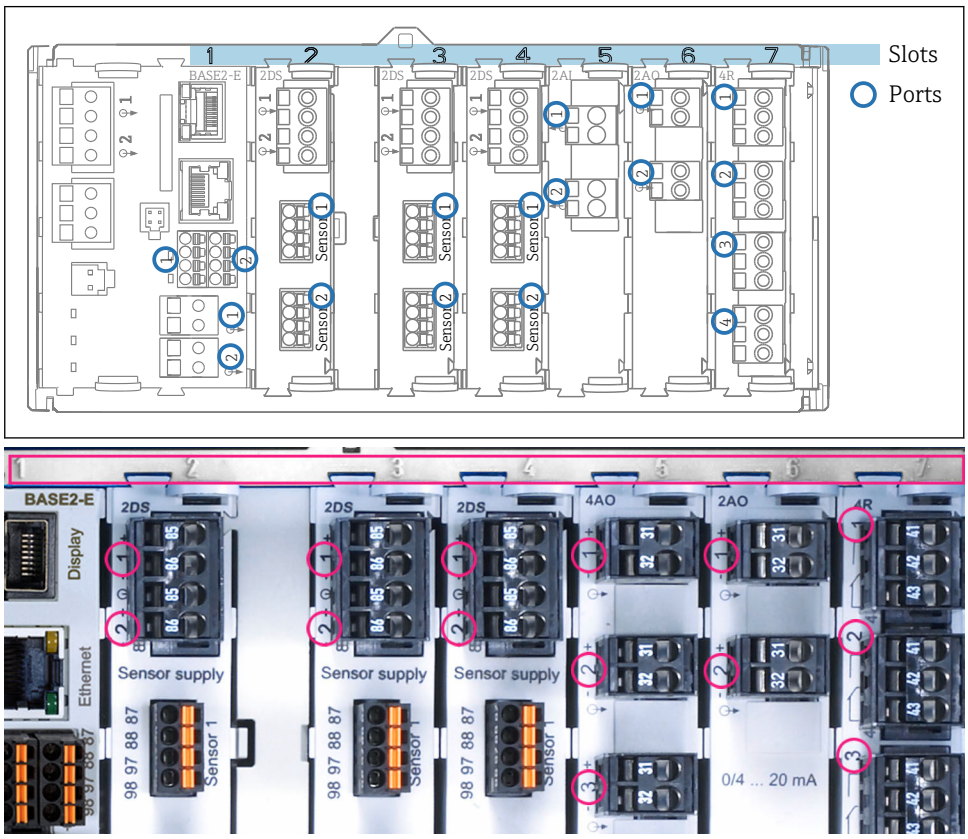

3 *Slot and port assignment of the hardware modules*

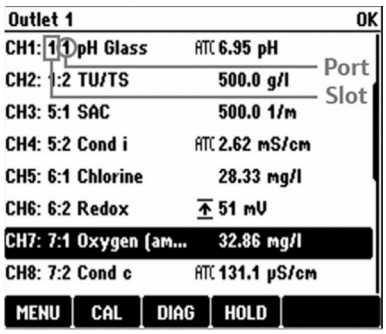

4 *Slot and port assignment on the display*

- Inputs are assigned to measuring channels in the ascending order of the slots and ports.
  Adjacent example:
  "CH1: 1:1 pH glass" means:
  Channel 1 (CH1) is slot 1 (basic module) : Port 1 (input 1), pH glass sensor
- Outputs and relays are named according to their function, e.g. "current output", and are displayed in ascending order with the slot and port numbers

Order of the modules

Depending on the version ordered, the device is supplied with a number of electronic modules, which are assigned in a specific sequence in ascending order to slots 0 to 7. If you do not have a particular module, the next moves up automatically:

- The basic module (which is always present) always occupies slots 0 and 1
- Fieldbus module 485DP or 485MB
- Memosens input module 2DS (DS = digital sensor)
- Extension module for digital inputs and outputs DIO (DIO = digital input and output)
- Current input module 2AI (AI = analog input)
- Current output modules 4AO or 2AO (AO = analog output)
- Relay modules AOR, 4R or 2R (AOR = analog output + relay, R = relay)

With intrinsically safe sensor communication module 2DS Ex-i:

- CM442/CM442R: always in slot 2
- CM444/CM444R: always in slot 7 (two channel) and slot 6 (four channel)
- CM448/CM448: slot 7, 6, 5

Modules with 4 ports are connected before modules of the same type with 2 ports.

Basic rule for hardware upgrades

Please note the following if upgrading the device:
- Upgrade only to 1x 4 AO module possible
- A maximum of two "DIO" modules may be used.

Determining the hardware delivery status

You must be aware of the type of modules and the number of them supplied with the device you have ordered to determine the delivery status of your Liquiline.
- Basic module
  One basic module in all versions. Always occupies slots 0 and 1.
- Fieldbus module
  Optional, and only one fieldbus module is possible.
- Input modules
  - Must be clearly assigned to the number of optional inputs ordered.
  - Examples:
    2 current inputs = module 2AI
    4 Memosens inputs = 2 inputs with basic module + module 2DS with 2 further inputs
- Current outputs and relays
  Various module combinations can exist.
  The following table will help you determine which modules your device has, depending on the type and number of outputs.

	Relays		
Current outputs	**0**	**2**	**4**
2	-	1 x 2R	1 x 4R
4	1 x 2AO	1 x AOR	1 x 2AO + 1 x 4R
6	1 x 4AO	1 x 4AO + 1 x 2R	1 x 4AO + 1 x 4R
8	1 x 4AO + 1 x 2AO	1 x 4AO + 1 x 2AO + 1 x 2R	1 x 4AO + 1x 2AO + 1 x 4R

▶ Sum up the number of modules and sort them according to the specified sequence → 🖹 7.
  ↳ This will give you the slot assignment for your device.

Terminal diagram

The unique terminal name is derived from:

Slot no. : Port no. : Terminal

Example, NO contact of a relay
Device with 4 inputs for digital sensors, 4 current outputs and 4 relays
- Base module BASE2-E (contains 2 sensor inputs, 2 current outputs)
- 2DS module (2 sensor inputs)
- 2AO module (2 current outputs)
- 4R module (4 relays)

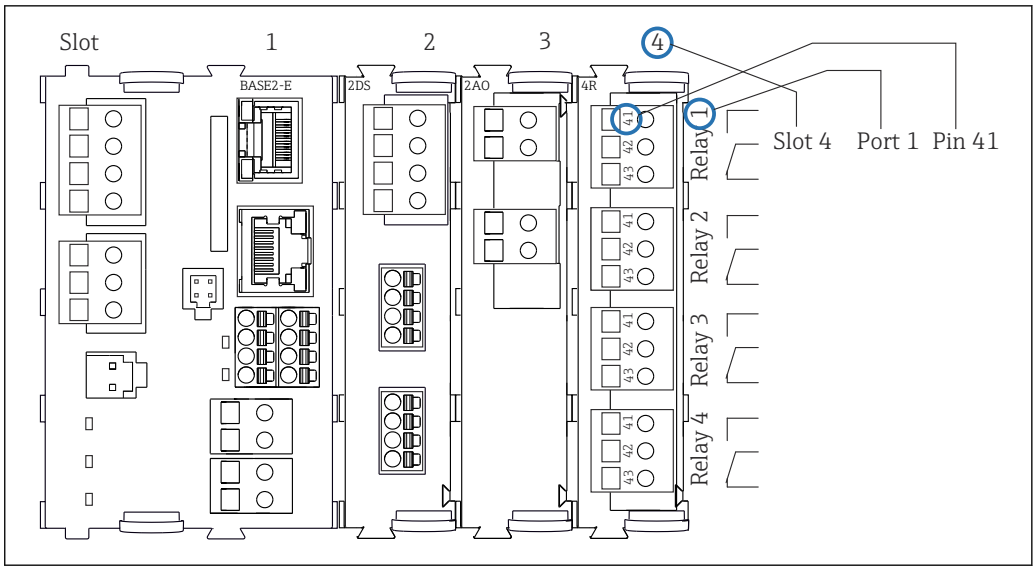

5 *Creating a terminal diagram using the example of the NO contact (terminal 41) of a relay*

Device configuration using the example of a CM442-M1A1F0***

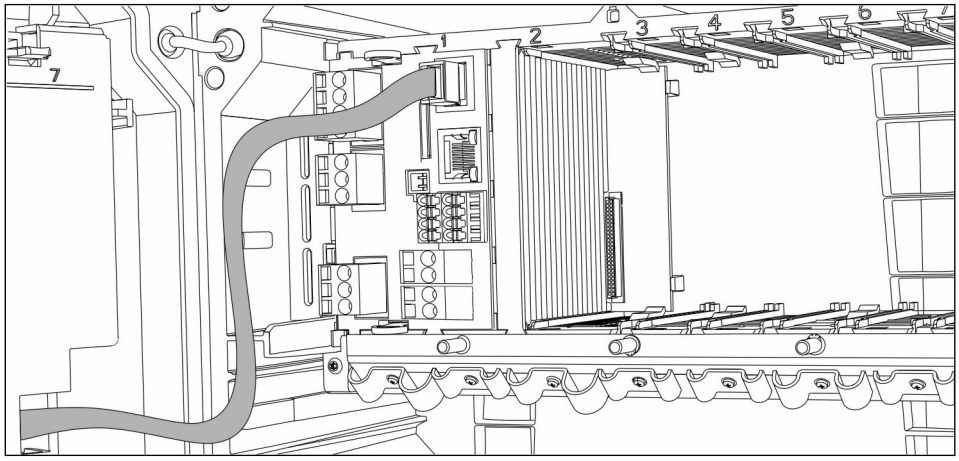

Ordered basic device (example)	▪ Order code CM442-**M1A1F0* ▪ Functionality: 1 x Memosens, 2 current outputs without HART
Extension options without additional modules	Activation with activation code: ▪ Second Memosens input (71114663) ▪ HART (71128428) ▪ EtherNet/IP + web server (71449914) ▪ Modbus TCP + web server (71449915) ▪ PROFINET + web server (71449901) ▪ Web server (71449918)
Extension options by using an extension module in free slot 2	PROFIBUS DP with module 485DP or Modbus RS485 with module 485MB: ▪ PROFIBUS DP Module 485DP (71575177) ▪ Modbus RS485 Module 485MB (71575178) If module 485DP or 485MB is retrofitted, any existing current outputs are disabled! Additional inputs or outputs, relays: ▪ Module 2AI (71135639): 2 current inputs ▪ Module 2AO (71135632): 2 current outputs ▪ Module AOR (71111053): 2 current outputs, 2 relays ▪ Module 2R (71125375) or 4R (71125376): 2 or 4 relays ▪ Module DIO (71135638): 2 digital inputs and 2 digital outputs
Device upgrade to CM444 or CM448	▪ Upgrade kit 71470973 (100 to 230 V AC) or 71470975 (24 V DC) ▪ Extension power supply unit and backplane ▪ Basic module BASE2-E (Memosens inputs same as for base device) ▪ 6 slots for extension modules ▪ Extension options: ▪ Second Memosens input (71114663), additional modules same as for CM442 ▪ Up to 8 measuring channels by using an appropriate number of Memosens input modules 2DS (71135631)
Basic rule for extensions	The sum of all current inputs and outputs must not exceed 8.
Restrictions if using CUS71D sensors for interface measurement	▪ CM442: Only one CUS71D can be connected. The second Memosens input may not be used. ▪ If extending to CM444: Every combination of CUS71D or other sensors is possible. All Memosens inputs (max. 4) can be used. ▪ An extension to CM448 is **not advisable** as the maximum number of Memosens inputs remains limited to 4.
Product Configurator	

Block circuit diagram CM442

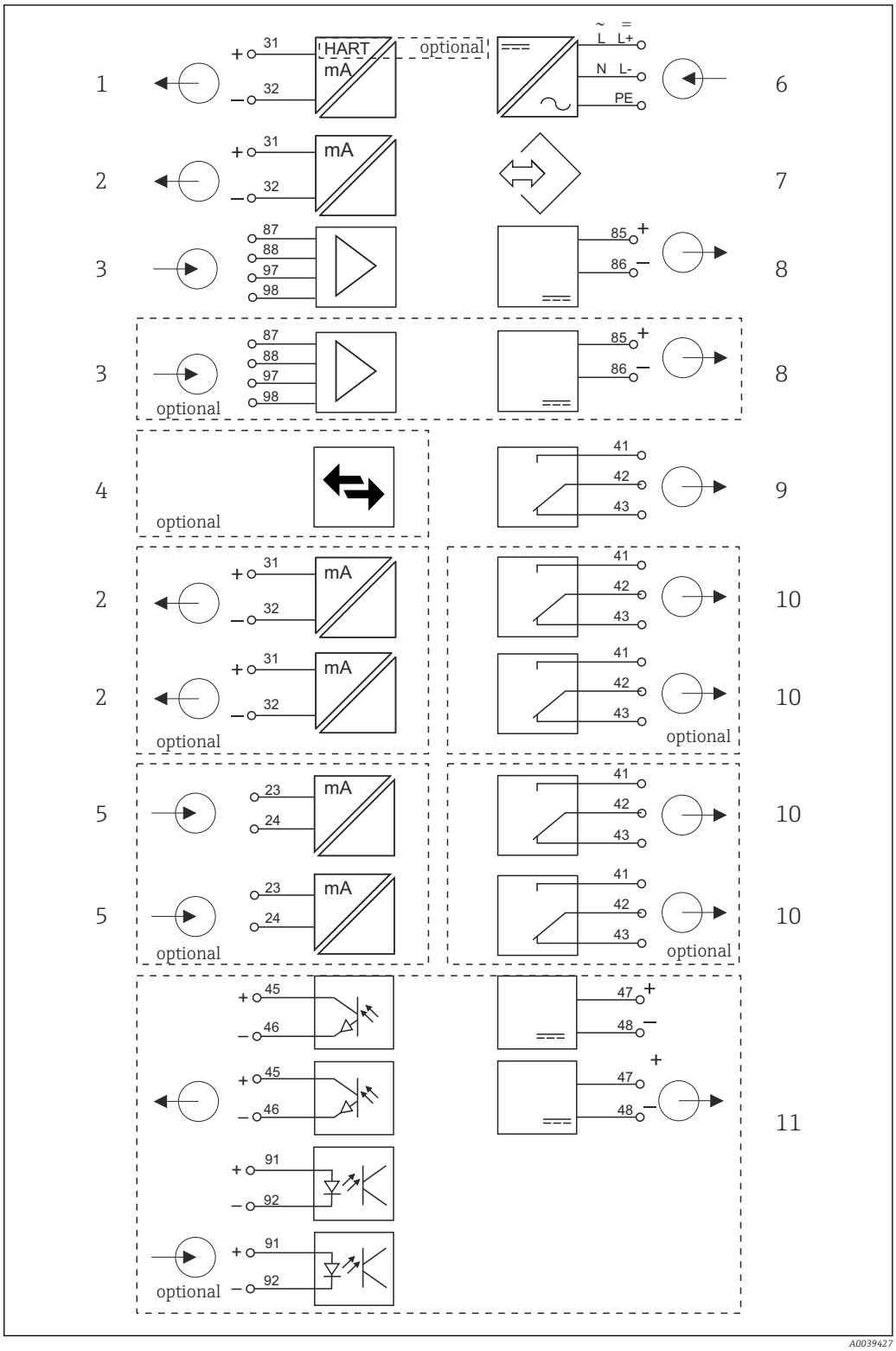

6 *Function diagram CM442*

1 *Current output 1:1, + HART (optional)*
2 *Current outputs (2 x optional)*
3 *2 x Memosens input (1 x optional)*
4 *PROFIBUS DP/Modbus/Ethernet (optional)*
5 *2 x current input (optional)*
6 *Power supply*
7 *Service interface*
8 *Power supply, fixed cable sensors*
9 *Alarm relay*
10 *2 or 4 x relays (optional)*
11 *2 digital inputs and outputs (optional)*

Block circuit diagram CM442 with sensor communication module 2DS Ex-i

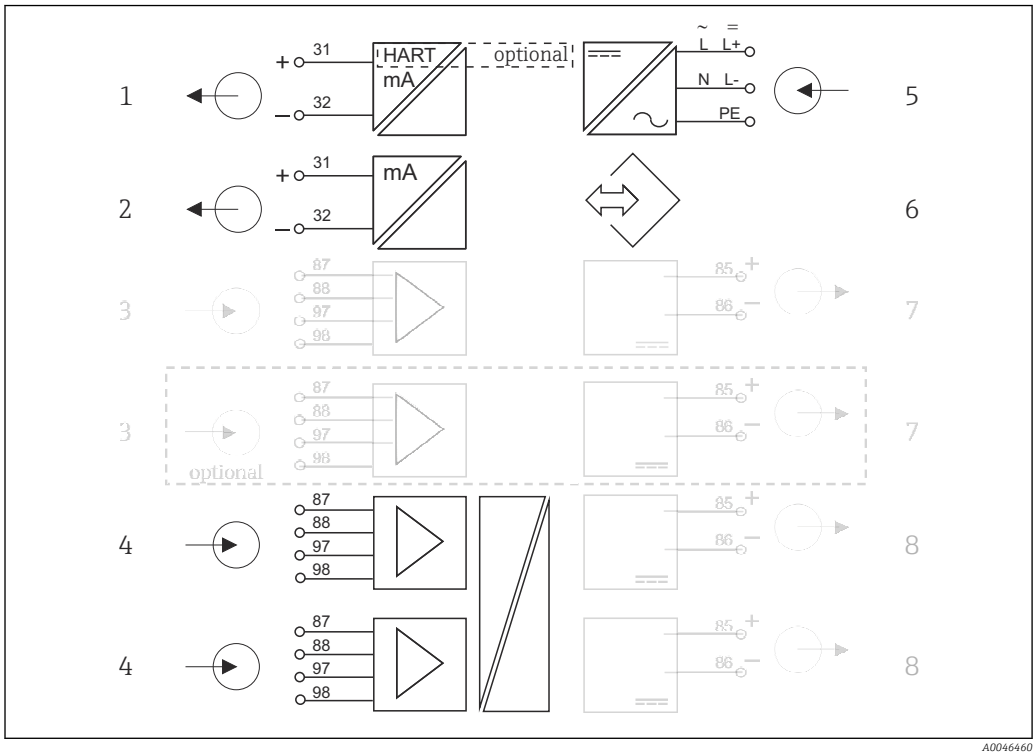

7 *Block circuit diagram CM442with intrinsically safe sensor communication module 2DS Ex-i*

1	*Current output 1:1, + HART (optional)*	*5*	*Power supply*
2	*Current outputs (2 x optional)*	*6*	*Service interface*
3	*2 x Memosens input BASE2 (disabled)*	*7*	*Power supply, fixed cable sensors BASE2 (disabled)*
4	*2 x Memosens input 2DS Ex-i for intrinsically safe Memosens sensors*	*8*	*Power supply, fixed cable sensors*

Device configuration using the example of a CM444-M42A1FA***

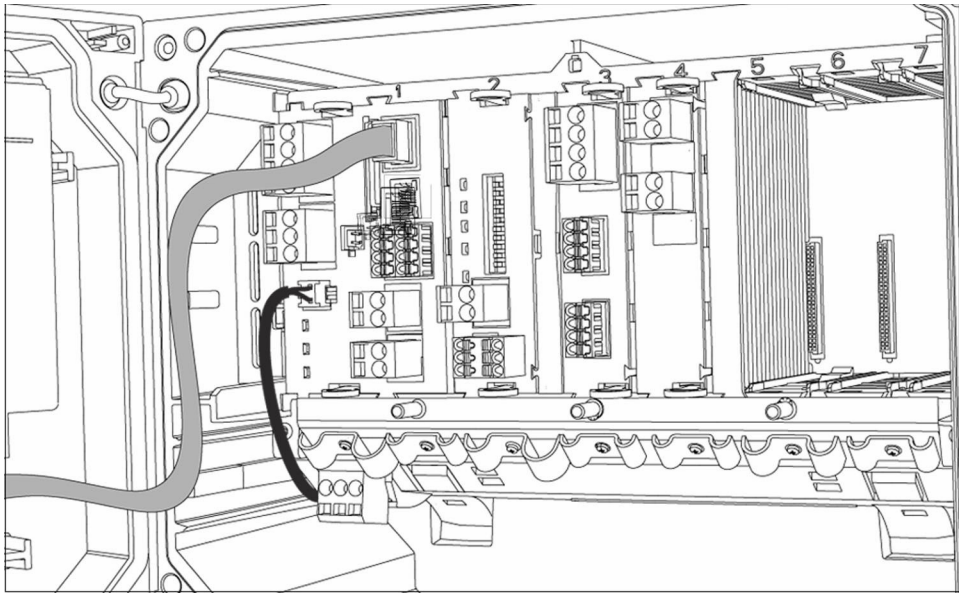

Ordered basic device (example)	▪ Order code CM444-**M42A1FA*
	▪ Functionality:
	  ▪ 4 x Memosens (2 on BASE2-E module + 2 on an extension module 2DS)
	  ▪ PROFIBUS communication (module 485DP)
	  ▪ Web server (BASE2-E module)
	  ▪ 2 current outputs without HART (on BASE2-E module)
	  ▪ 2 current inputs (module 2AI)
	3 slots are still free in this example. More or fewer slots can be free in other versions.

Extension options without additional modules	None
Modification options without additional modules	Retrofit by removing module 485DP and entering the activation code for: ▪ Modbus TCP + web server (71449915) ▪ EtherNet/IP + web server (71449914) ▪ PROFINET + web server (71449901) ▪ HART (71128428) ▪ Web server (71449918)
Modification options by replacing existing modules	Change the communication type by replacing module 485DP with module 485MB. This disables the communication type used previously! Module 485MB: Modbus RS485 + web server (Order No. 71575178)
Extension options by using extension modules in free slots 5-7	Only the following is possible for the example above: ▪ Module 2R (71125375) or 4R (71125376): 2 or 4 relays ▪ Module DIO (71135638): 2 digital inputs and 2 digital outputs If extending to 8 measuring channels: Module 2DS (71135631): 2 Memosens inputs Additional inputs or outputs and relays if fieldbus module 485DP is removed: ▪ Module 2AO (71135632): 2 current outputs ▪ Module AOR (71111053): 2 current outputs, 2 relays ▪ Module 2R (71125375) or 4R (71125376): 2 or 4 relays ▪ Module DIO (71135638): 2 digital inputs and 2 digital outputs If module 485DP is removed and an Ethernet-based fieldbus is used via BASE2-E module, a maximum of up to 6 current outputs can be operated in addition. Only two current outputs are possible with module 485DP.
Basic rule for extensions	The sum of all current inputs and outputs must not exceed 8.
Restrictions if using CUS71D sensors for interface measurement	▪ In the case of CM444, every combination of Memosens sensors (max. 4) is possible. ▪ An extension to CM448 is not advisable as the maximum number of Memosens inputs when using CUS71D remains limited to 4.
Product Configurator	

Block circuit diagram CM444

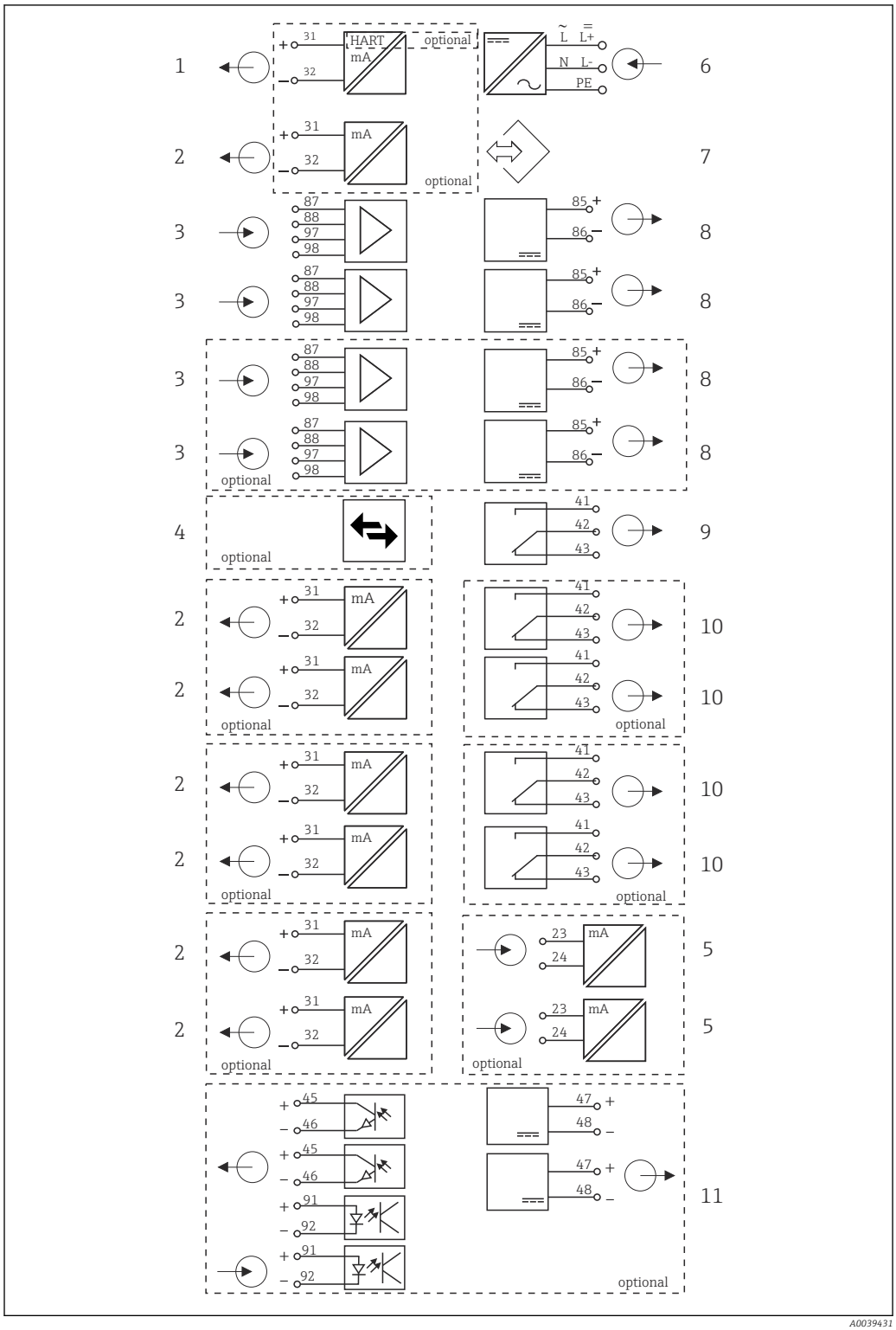

8 *Function diagram CM444*

1 *Current output 1:1, + HART (both optional)*
2 *Max. 7 x current output (optional)*
3 *Memosens input (2 x standard + 2 x optional)*
4 *PROFIBUS DP/Modbus/Ethernet (optional)*
5 *2 x current input (optional)*
6 *Power supply*
7 *Service interface*
8 *Power supply, fixed cable sensors*
9 *Alarm relay*
10 *2 or 4 x relays (optional)*
11 *2 digital inputs and outputs (optional)*

Block circuit diagram CM444 with sensor communication module 2DS Ex-i

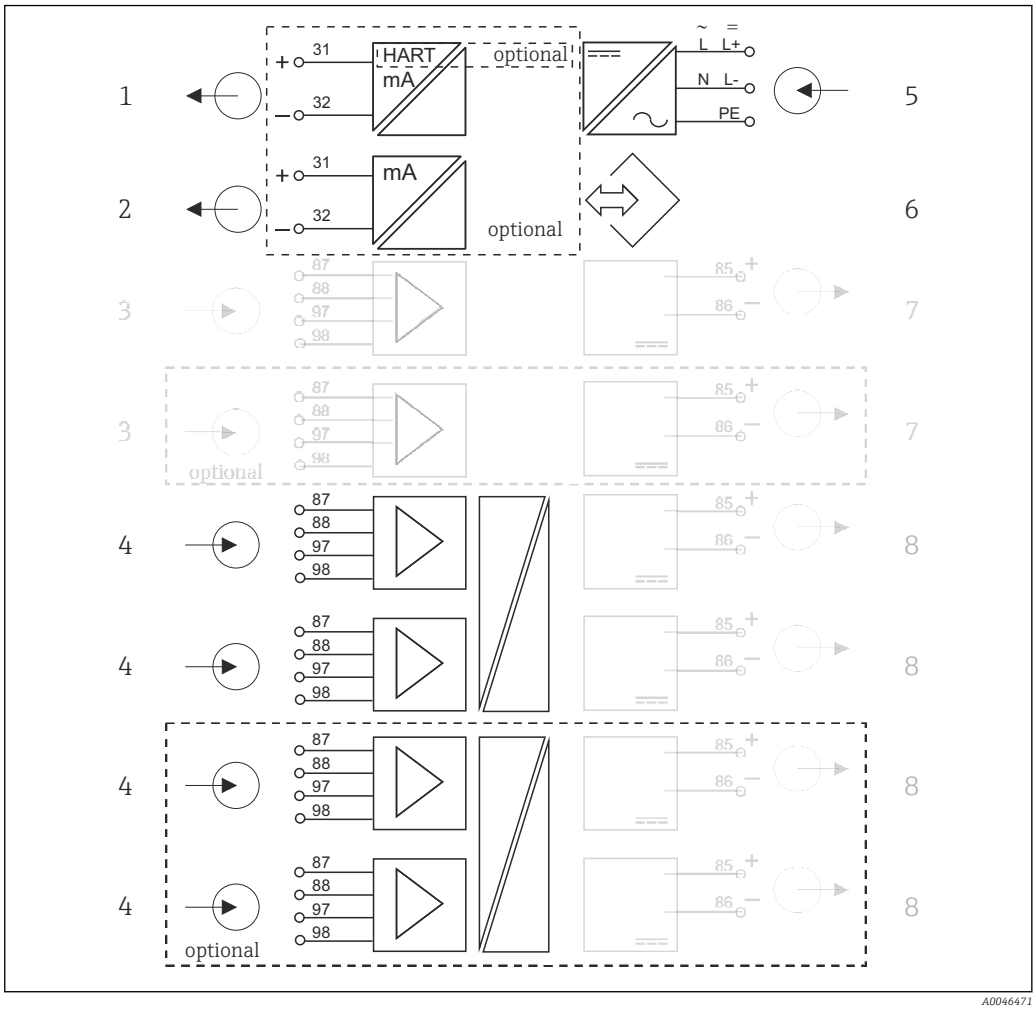

9 *Block circuit diagram CM444 with intrinsically safe sensor communication module 2DS Ex-i*

1	*Current output 1:1, + HART (optional)*	5	*Power supply*
2	*Current outputs (2 x optional)*	6	*Service interface*
3	*2 x Memosens input BASE2 (disabled)*	7	*Power supply, fixed cable sensors BASE2 (disabled)*
4	*2 x Memosens input 2DS Ex-i for intrinsically safe Memosens sensors*	8	*Power supply, fixed cable sensors*

Device configuration using the example of a CM448-26A1***

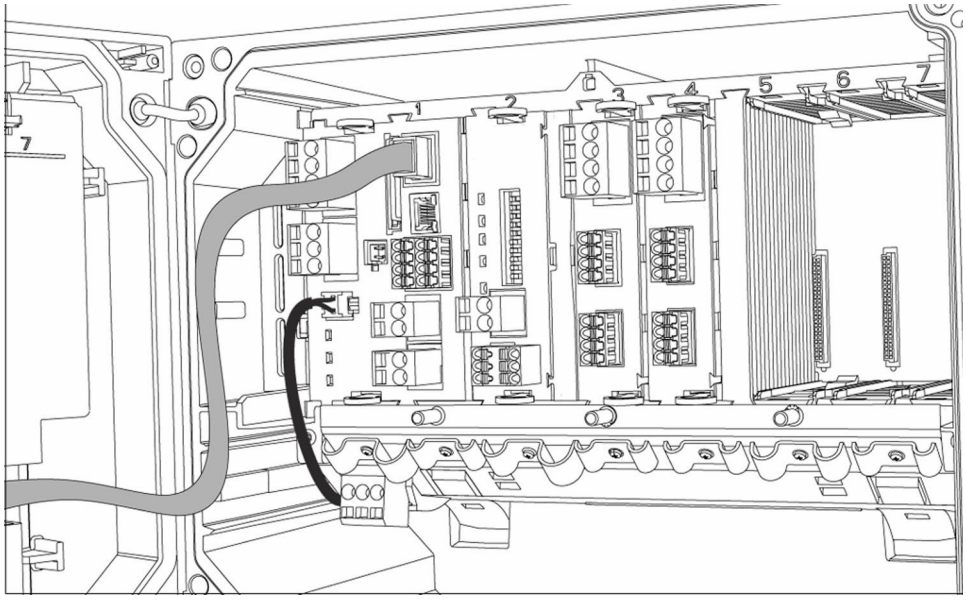

A0050483

Ordered basic device (example)	▪ Order code CM448-**26A1*
	▪ Functionality:
	  ▪ 6 x Memosens (2 on BASE2-E module + 2 on two 2DS extension modules)
	  ▪ PROFIBUS communication (module 485DP)
	  ▪ Web server (BASE2-E module)
	3 slots are still free in this example. More or fewer slots can be free in other versions.

Extension options without additional modules	Activation code for the use of current outputs of the basic module: 2 current outputs (71140891)
Modification options without additional modules	Retrofit by removing module 485DP and entering the activation code for communication via the BASE2 module: ▪ Modbus TCP + web server (71449915) ▪ EtherNet/IP + web server (71449914) ▪ PROFINET + web server (71449901) ▪ HART (71128428) ▪ Web server (71449918)
Modification options by replacing existing modules	Change the communication type by replacing module 485DP with module 485MB. This disables the communication type used previously! Module 485MB: Modbus RS485 + web server (Order No. 71575178)
Extension options by using extension modules in free slots 5-7	If extending to 8 measuring channels: Module 2DS (71135631): 2 Memosens inputs Additional inputs or outputs, relays: ▪ Module 2AO (71135632): 2 current outputs ▪ Module 2AI (71135639): 2 current inputs ▪ Module AOR (71111053): 2 current outputs, 2 relays ▪ Module 2R (71125375) or 4R (71125376): 2 or 4 relays ▪ Module DIO (71135638): 2 digital inputs and 2 digital outputs If module 485DP is removed and an Ethernet-based fieldbus is used, a maximum of up to 6 current outputs can be operated in addition. Only two current outputs are possible with module 485DP.
Basic rule for extensions	The sum of all current inputs and outputs must not exceed 8.
Restrictions if using CUS71D sensors for interface measurement	The maximum number of Memosens inputs that can be used is limited to 4! Here, every combination of CUS71D and other Memosens sensors is then possible.
Product Configurator	

Block circuit diagram CM448

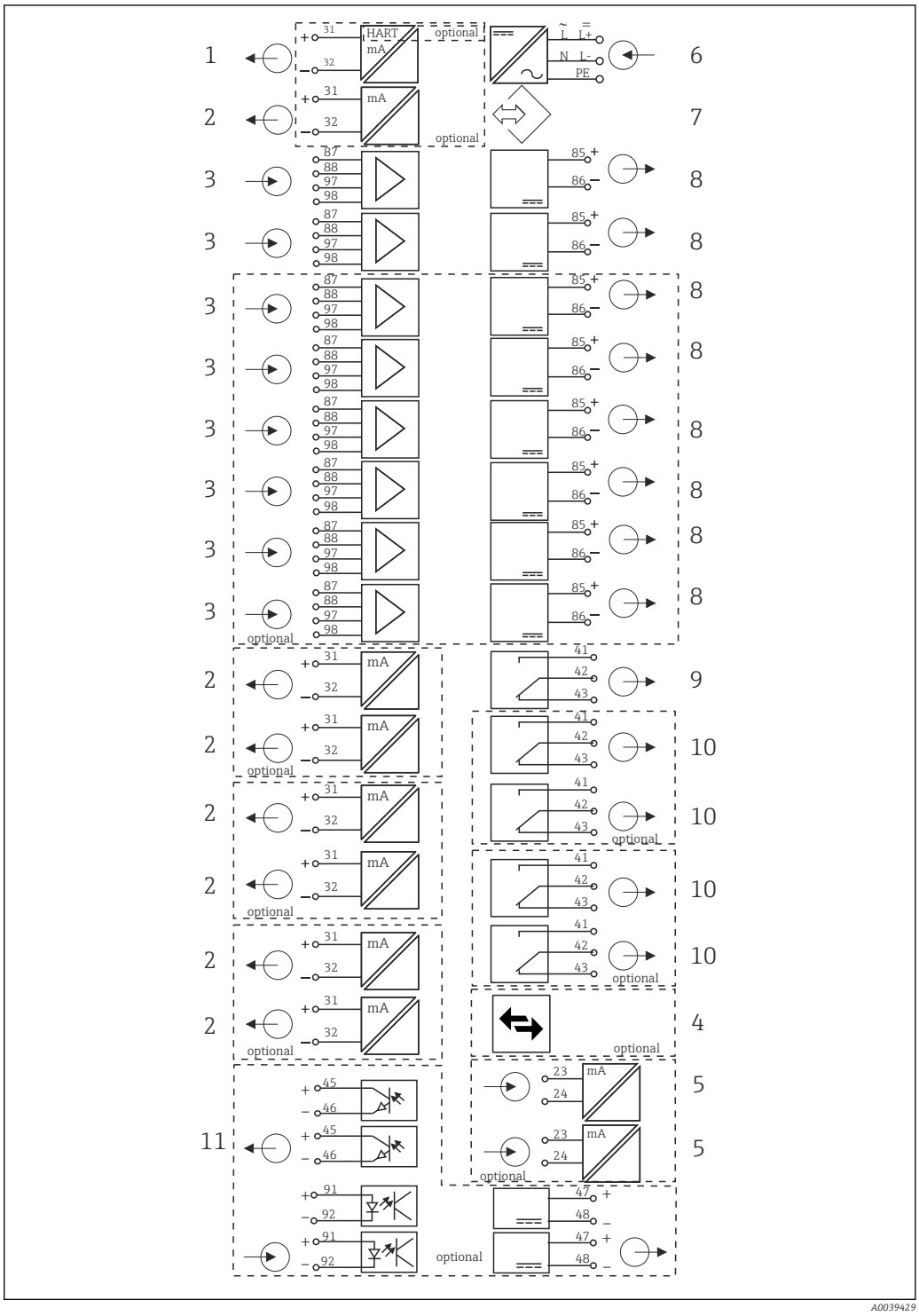

10 *Function diagram CM448*

1 *Current output 1:1, + HART (both optional)*
2 *Max. 7 x current output (optional)*
3 *Max 8 x Memosens input (2 x of which are optional)*
4 *PROFIBUS DP/Modbus/Ethernet (optional)*
5 *2 x current input (optional)*
6 *Power supply*
7 *Service interface*
8 *Power supply, fixed cable sensors*
9 *Alarm relay*
10 *2 or 4 x relays (optional)*
11 *2 digital inputs and outputs (optional)*

Block circuit diagram CM448 with sensor communication module 2DS Ex-i

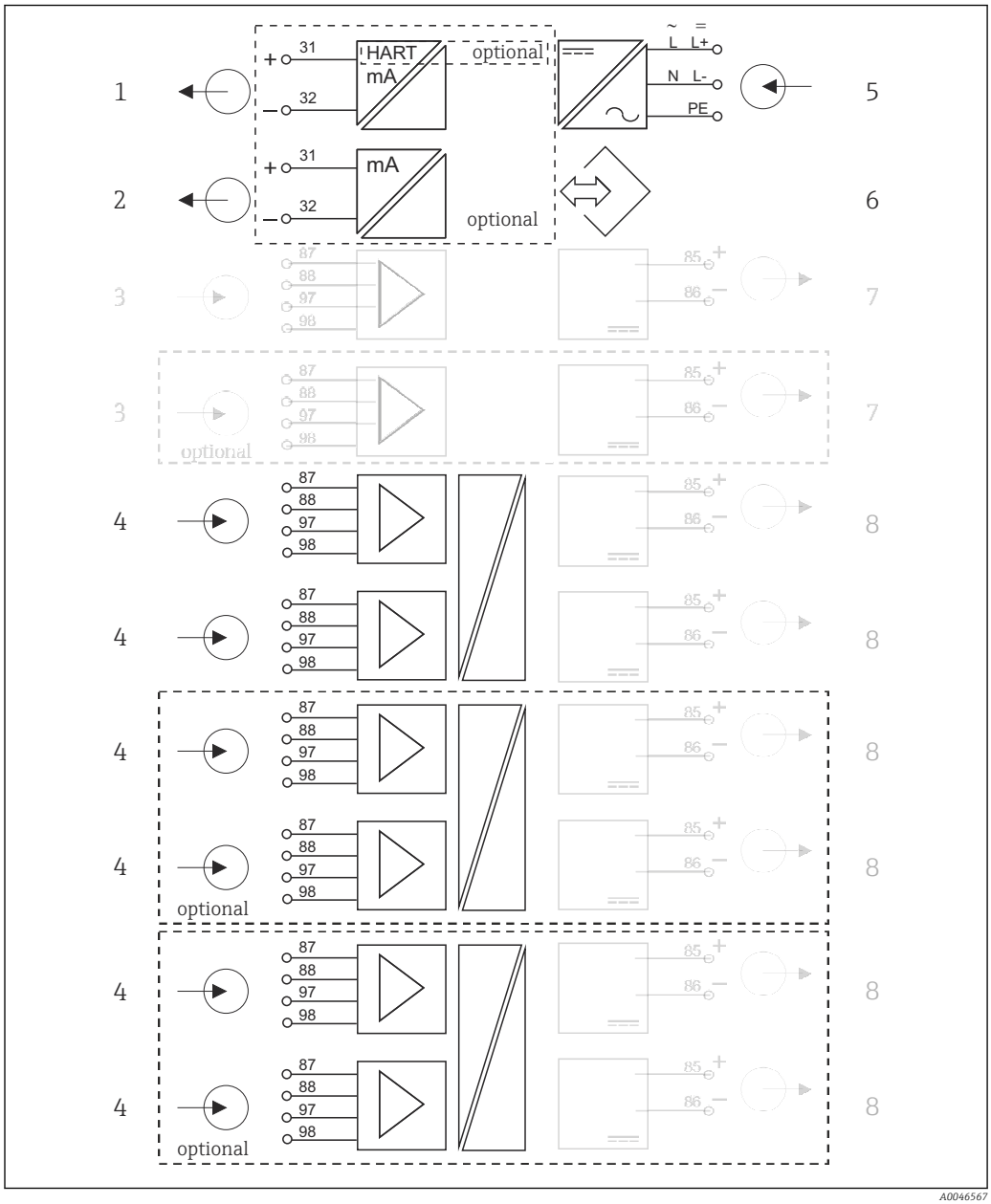

11 Block circuit diagram CM448 with intrinsically safe sensor communication module 2DS Ex-i

1	*Current output 1:1, + HART (optional)*	*5*	*Power supply*
2	*Current outputs (2 x optional)*	*6*	*Service interface*
3	*2 x Memosens input BASE2 (disabled)*	*7*	*Power supply, fixed cable sensors BASE2 (disabled)*
4	*2 x Memosens input 2DS Ex-i for intrinsically safe Memosens sensors*	*8*	*Power supply, fixed cable sensors*

Communication and data processing

Communication protocols:
Fieldbus systems
- HART
- PROFIBUS DP (Profile 3.02)
- Modbus TCP or RS485
- PROFINET
- EtherNet/IP

Only one type of fieldbus communication can ever be active. The last activation code entered decides which bus is used.

The device drivers available make it possible to perform a basic setup and display measured values and diagnostics information via the fieldbus. A full device configuration via the fieldbus is not possible.

Extension module 485DP/485MB and current outputs
For PROFIBUS DP and Modbus RS485 communication protocols:
- CM442
  Current outputs cannot be used in parallel. Any existing current outputs are deactivated with the installation of 485DP/485MB.
  PROFIBUS DP and Modbus RS485 are not possible in conjunction with the sensor communication module 2DS Ex-i.
- CM444/CM448
  A maximum of 2 current outputs can be used in parallel.

Ethernet functionality via Base2 module and current outputs
- CM442
  A maximum of 2 current outputs can be used in parallel.
- CM444 and CM448
  A maximum of 6 current outputs can be used in parallel.

Bus termination on the device
- Via slide switch at bus module 485DP/485MB
- Displayed via LED "T" on bus module 485DP/485MB

Reliability

Dependability

Memosens
Memosens makes your measuring point safer and more reliable:
- Non-contact, digital signal transmission enables optimum galvanic isolation
- No contact corrosion
- Completely watertight
- Sensor can be calibrated in a lab, thus increasing the availability of the measuring point in the process
- Intrinsically safe electronics mean operation in hazardous areas is not a problem.
- Predictive maintenance thanks to recording of sensor data, e.g.:
  - Total hours of operation
  - Hours of operation with very high or very low measured values
  - Hours of operation at high temperatures
  - Number of steam sterilizations
  - Sensor condition

Heartbeat diagnostics

- Heartbeat diagnostics screen with graphic indicators for the health of the device and sensor and with a maintenance or (sensor-dependent) calibration timer
- Heartbeat status information on the health of the device and condition of the sensor
  - ☺: Sensor/device condition and maintenance timer > 20 %; no action is required
  - 😐: Sensor/device condition or maintenance timer > 5 ≤ 20 %, maintenance not yet urgent but should be scheduled
  - ☹: Sensor/device condition or maintenance timer < 5 %, maintenance is recommended
- The Heartbeat sensor condition is the assessment of the calibration results and the sensor diagnostic functions.

An unhappy smiley can be due to the calibration result, the measured value status or to the operating hours limit having been exceeded. These limits can be configured in the sensor setup in a way that adapts the Heartbeat diagnostics to the application.

Heartbeat and NAMUR category
The Heartbeat status indicates the sensor or device condition while the NAMUR categories (F, C, M, S) assess the reliability of the measured value. The two conditions can correlate but do not have to.
- **Example 1**
  - The number of remaining cleaning cycles for the sensor reaches 20% of the defined maximum number. The Heartbeat symbol changes from ☺ to 😐. The measured value is still reliable so the NAMUR status signal does not change.
  - If the maximum number of cleaning cycles is exceeded, the Heartbeat symbol changes from 😐 to ☹. While the measured value can still be reliable, the NAMUR status signal changes to M (maintenance required).
- **Example 2**
  The sensor breaks. The Heartbeat status changes immediately from ☺ to ☹ and the NAMUR status signal also changes immediately to F (failure).

Heartbeat Monitoring

Sensor data from Memosens sensors are transmitted via the EtherNet/IP, PROFINET, PROFIBUS DP, HART, Modbus RTU and Modbus TCP fieldbus protocols. These data can be used for predictive maintenance, for instance.

Examples include:
- Total hours of operation
- Hours of operation with very high or very low measured values
- Hours of operation at high temperatures
- Number of steam sterilizations
- Sensor identification
- Calibration information

For detailed information on "Ethernet/IP communication", see the product pages on the Internet (→ SD01293C).

For detailed information on "Modbus communication", see the product pages on the Internet (→ SD01189C).

For detailed information on "PROFINET communication", see the product pages on the internet (→ SD02490C).

For detailed information on "PROFIBUS communication", see the product pages on the Internet (→ SD01188C).

More detailed information on HART communication is provided on the product pages on the Internet (→ SD01187C).

Heartbeat Verification

Heartbeat Verification makes it possible to verify the correct operation of the measuring device without interrupting the process. This verification can be documented anytime.

Sensor Check System (SCS)

The Sensor Check System (SCS) monitors the high impedance of the pH glass. An alarm is issued if a minimum impedance value is undershot or a maximum impedance is exceeded.
- Glass breakage is the main reason for a drop in high impedance values
- The reasons for increasing impedance values include:
  - Dry sensor
  - Worn pH glass membrane

For the SCS, upper and lower limit values can be enabled or disabled independently of one another.

Process Check System (PCS)

The process check system (PCS) checks the measuring signal for stagnation. An alarm is triggered if the measuring signal does not change over a specific period (several measured values).

The main causes of stagnating measured values are:
- Contaminated sensor, or sensor outside of medium
- Sensor defective
- Process error (e.g. through control system)

Self-monitoring functions

Current inputs are deactivated in the event of overcurrent and reactivated once the overcurrent stops. Board voltages are monitored and the board temperature is also measured.

USP and EP

The limit functions for pharmaceutical water in accordance with USP and EP specifications are implemented in the software for conductivity measurements:
- "Water for Injection" (WFI) as per USP <645> and EP
- "Highly Purified Water" (HPW) as per EP
- "Purified Water" (PW) as per EP

The uncompensated conductivity value and the temperature are measured for the USP/EP limit functions. The measured values are compared against the tables defined in the standards. An alarm is triggered if the limit value is exceeded. Furthermore, it is also possible to configure an early warning alarm that signals undesired operating states before they occur.

ChemocleanPlus

Freely programmable sequence control
- e.g. for automatic sensor cleaning in retractable assemblies for reliable measurement results in processes with a high risk of contamination
- Individual, time-based activation of 4 outputs e.g. relays
- Starting, stopping or pausing of activities via digital input or fieldbus signals e.g. from limit position switches

Maintainability

Modular design

The modular transmitter design means it can be easily adapted to suit your needs:
- Retrofit extension modules for new or extended range of functions, e.g. current outputs, relays and digital communication
- Upgrade to maximum eight-channel measurement
- Optional: M12 sensor connector for connecting any kind of Memosens sensor
- Optional: CDI connector for external access to the service interface (avoids having to unscrew the housing cover)

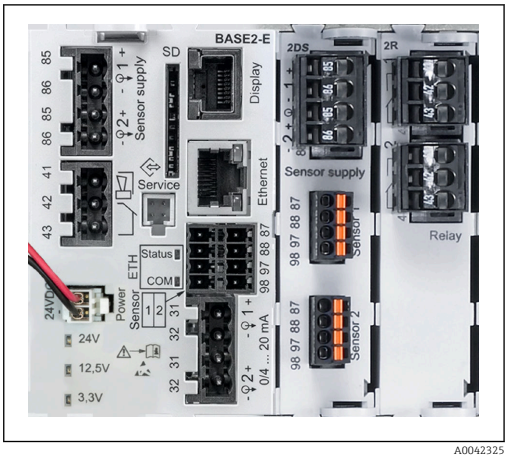

A0042325

12 CM444: example

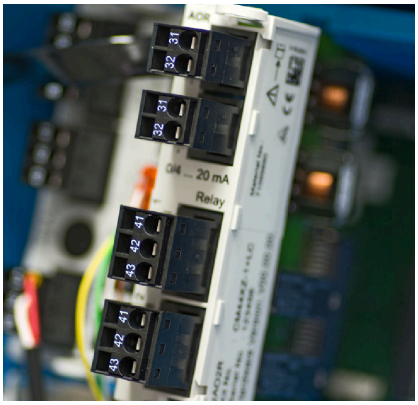

A0042346

13 Extension module

Data logger function

- Adjustable scan time: 1 to 3600 s (1 h)
- Data logbooks:
  - Max. 8 data logbooks
  - 150,000 entries per logbook
  - Graphic display (load curves) or numerical list
- Calibration logbook: max. 75 entries
- Hardware version logbook:
  - Hardware configuration and modifications
  - Max. 125 entries
- Version logbook:
  - E.g. software updates
  - Max. 50 entries
- Operation logbook: max. 250 entries
- Diagnostics logbook: max. 250 entries

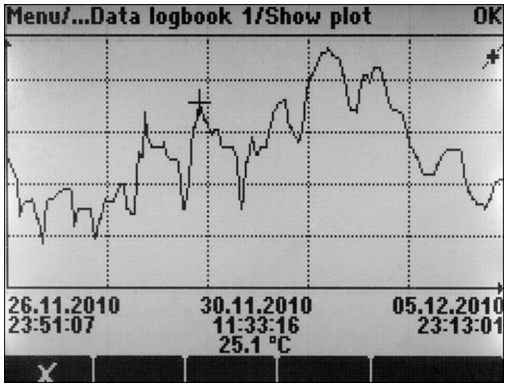

14 Data logbook: Graphic display

Logbooks remain unchanged even after a software update.

SD card

The exchangeable storage medium enables:
- Quick and easy software updates and upgrades
- Data storage of internal device memory (e.g. logbooks)
- Transfer of complete configurations to a device with an identical setup (backup function)
- Transfer of configurations without the TAG and bus address to devices with an identical setup (copy function)
- Saving of screenshots for documentation purposes

Endress+Hauser offers industry-approved SD cards as accessories. These memory cards provide maximum data security and integrity.

Other industrial quality SD cards, 1 to 32 GB and with a maximum weight of 5 g can also be used. However, Endress+Hauser does not accept any responsibility for the data security of such cards.

External signals for device control and for activating external devices

Hardware options, e.g. the "DIO" module with 2 digital inputs and 2 digital outputs or fieldbus module 485DP/485MB enable the following:
- via a digital input signal
  - measuring range switching for conductivity (upgrade code required, see accessories)
  - switching between different calibration datasets in the case of optical sensors
  - an external hold
  - a cleaning interval to be triggered
  - switching on and off a PID controller, e.g. via the proximity switch of the CCA250
  - the use of the input as an "analog input" for pulse-frequency modulation (PFM)
- via a digital output signal
  - the static transmission (similar to a relay) of diagnostic states, point level switch states etc.
  - the dynamic transmission (comparable to a non-wearing "analog output") of PFM signals, e.g. to control dosing pumps.

FieldCare and Field Data Manager

FieldCare
Configuration and asset management software based on FDT/DTM technology
- Complete device configuration when connected via FXA291 and service interface
- Access to a number of configuration parameters and identification, measuring and diagnostic data when connected via HART modem
- Logbooks can be downloaded in CSV format or binary format for "Field Data Manager" software

Field Data Manager
Visualization software and database for measuring, calibration and configuration data
- SQL database which is protected against manipulation
- Functions to import, save and print out logbooks
- Load curves to display measured values

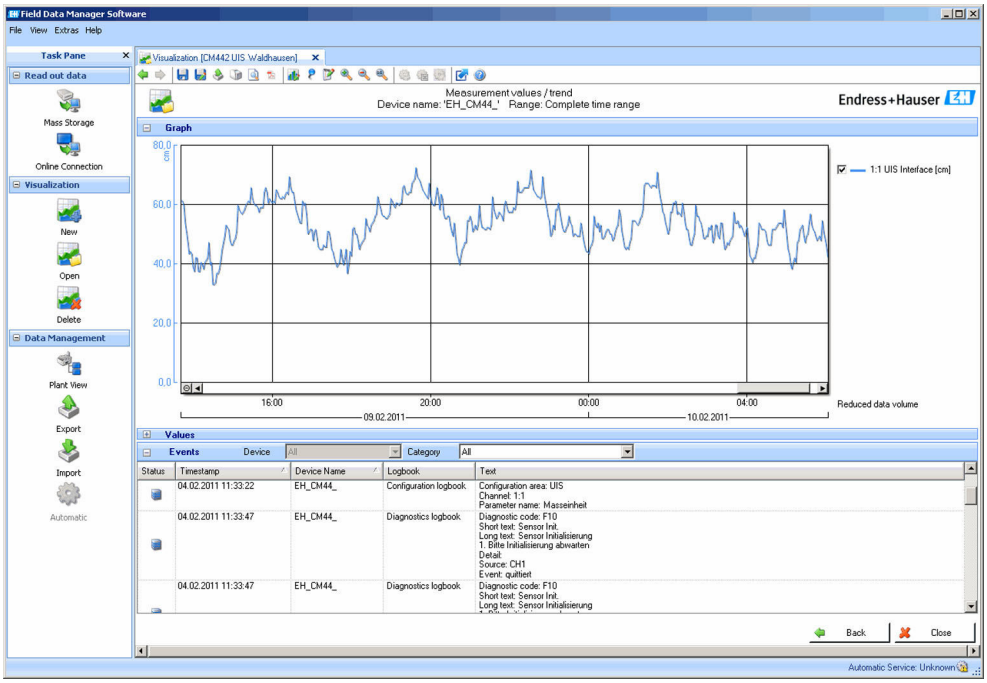

A0016009

15 *Field Data Manager: Load curves*

Virtual process values (mathematical functions)

In addition to "real" process values, which are provided by connected physical sensors or analog inputs, mathematical functions can be used to calculate a maximum of 8 "virtual" process values.

The "virtual" process values can be:
- Output via a current output or a fieldbus
- Used as a controlled variable
- Assigned as a measured variable to a limit switch
- Used as a measured variable to trigger cleaning
- Displayed in user-defined measuring menus

The following mathematical functions are possible:
- Calculation of pH from two conductivity values according to VGB 405 RL, e.g. in boiler feedwater
- Difference between two measured values from different sources, e.g. for membrane monitoring
- Differential conductivity, e.g. for monitoring the efficiency of ion exchangers
- Degassed conductivity, e.g. for process controls in power plants
- Redundancy for monitoring two or three redundant sensors
- rH calculation from the measured values of a pH sensor and an ORP sensor
- Calculation of the remaining capacity of a cation exchanger
- Calculation of the combined chlorine concentration. This calculation involves subtracting the free chlorine concentration from the total chlorine concentration. This requires both a sensor for free chlorine CCS51E and a sensor for total chlorine CCS53E.
- Formula editor

Concentration tables

When the device is delivered from the factory, tables are saved in the device that allow inductive conductivity measurements to be converted to concentrations of certain substances. 4 user-defined tables are also possible.

The following factory concentration tables are available:

NaOH	0 to 15 %	0 to 100 °C (32 to 212 °F)
NaOH	25 to 50%	2 to 80 °C (36 to 176 °F)
HCl	0 to 20 %	0 to 65 °C (32 to 149 °F)
HNO_3	0 to 30 %	2 to 80 °C (36 to 176 °F)
H_2SO_4	0.5 to 27 % and 35 to 85 %	0 to 100 °C (32 to 212 °F)
H_2SO_4	93 to 100 %	10 to 115 °C (50 to 239 °F)
H_3PO_4	0 to 40 %	2 to 80 °C (36 to 176 °F)
NaCl	0 to 26 %	2 to 80 °C (36 to 176 °F)

Safety

Real-time clock

The device has a real-time clock, which is buffered by a button cell battery if the power supply fails.

This ensures that the device continues to keep the correct date and time when it is restarted and that the time stamp for the logbooks is correct.

Data security

All settings, logbooks etc. are stored in a non-volatile memory to ensure that the data are retained even in the event of a disruption to the power supply.

Measuring range switching for conductivity

- Can be used in CIP processes e.g. for safe monitoring of phase separations
- Switching between 4 complete parameter sets:
  - Conductivity operating mode
  - Concentration tables
  - Temperature compensation
  - Output signal range
  - Limit value switch
- Via digital inputs or fieldbus

Measured value compensation for oxygen and conductivity

- Pressure or temperature compensation
- Input signals from external sensors via current input or fieldbus
- Signals from connected temperature sensors

Password protection

Password-protected login
- For remote operation via web server
- For local operation

Process safety

Two independent PID controllers
- One- or two-sided control
- Limit switches
- 4 cleaning programs which can be programmed independently of each other

IT security

The manufacturer warranty is valid only if the product is installed and used as described in the Operating Instructions. The product is equipped with security mechanisms to protect it against any inadvertent changes to the settings.

IT security measures, which provide additional protection for the product and associated data transfer, must be implemented by the operators themselves in line with their security standards.

Input

Measured variables	→ Documentation of the connected sensor
Measuring ranges	→ Documentation of the connected sensor
Types of input	▪ Digital sensor inputs for sensors with Memosens protocol ▪ Analog current inputs (optional) ▪ Digital inputs (optional) ▪ Digital sensor inputs for intrinsically safe sensors with Memosens protocol and Ex approval (optional)
Input signal	Depending on version: ▪ Without sensor communication module 2DS Ex-i: max. 8 x binary sensor signal ▪ With sensor communication module 2DS Ex-i: max. 6 x binary sensor signal ▪ 2 x 0/4 to 20 mA (optional), passive, potentially isolated from one another and from the sensor inputs ▪ 0 to 30 V
Cable specification	**Cable type** ▪ Without sensor communication module 2DS Ex-i: Memosens data cable CYK10 or sensor fixed cable, each with cable end sleeves or M12 circular plug (optional) ▪ With sensor communication module 2DS Ex-i: Memosens data cable CYK10 or sensor fixed cable, each with cable end sleeves Only Memosens data cables CYK10 with an appropriate approval may be connected to the intrinsically safe digital sensor inputs of the sensor communication module 2DS Ex-i. **Cable length** Max. 100 m (330 ft)

Digital inputs, passive

Electrical specification	▪ Drawing power (passive) ▪ Galvanically isolated
Span	▪ High: 11 to 30 V DC ▪ Low: 0 to 5 V DC
Nominal input current	max. 8 mA
PFM function	Minimum pulse width: 500 µs (1 kHz)
Test voltage	500 V
Cable specification	Max. 2.5 mm² (14 AWG)

Current input, passive

Span	> 0 to 20 mA
Signal characterization	Linear
Internal resistance	Non-linear

Test voltage 500 V

Output

Output signal

Depending on version:
- 2 x 0/4 to 20 mA, active, galvanically isolated from one another and from the sensor circuits
- 4 x 0/4 to 20 mA, active, galvanically isolated from one another and from the sensor circuits
- 6 x 0/4 to 20 mA, active, galvanically isolated from one another and from the sensor circuits
- 8 x 0/4 to 20 mA, active, galvanically isolated from one another and from the sensor circuits
- Optional HART communication (only via current output 1:1)

HART	
Signal encoding	FSK ± 0.5 mA above current signal
Data transmission rate	1200 baud
Galvanic isolation	Yes
Load (communication resistor)	250 Ω

PROFIBUS DP/RS485	
Signal encoding	EIA/TIA-485, PROFIBUS DP-compliant acc. to IEC 61158
Data transmission rate	9.6 kBd, 19.2 kBd, 45.45kBd, 93.75 kBd, 187.5 kBd, 500 kBd, 1.5 MBd, 6 MBd, 12 MBd
Galvanic isolation	Yes
Connectors	Spring terminal (max. 1.5 mm), bridged internally (T-function), optional M12
Bus termination	Internal slide switch with LED display

Modbus RS485	
Signal encoding	EIA/TIA-485
Data transmission rate	2,400, 4,800, 9,600, 19,200, 38,400, 57,600 and 115,200 baud
Galvanic isolation	Yes
Connectors	Spring terminal (max. 1.5 mm), bridged internally (T-function), optional M12
Bus termination	Internal slide switch with LED display

Ethernet and Modbus TCP	
Signal encoding	IEEE 802.3 (Ethernet)
Data transmission rate	10/100 MBd
Galvanic isolation	Yes
Connection	RJ45, optional M12
IP address	DHCP (default) or configuration via menu

Ethernet/IP	
Signal encoding	IEEE 802.3 (Ethernet)
Data transmission rate	10/100 MBd
Galvanic isolation	Yes
Connection	RJ45, optional M12 (D-coded)
IP address	DHCP (default) or configuration via menu

PROFINET	
Signal encoding	IEEE 802.3 (Ethernet)
Data transmission rate	100 MBd
Galvanic isolation	Yes
Connection	RJ45, optional M12 (D-coded)
Name of station	Via DCP protocol by means of configuration tool (e.g. Siemens PRONETA)
IP address	Via DCP protocol by means of configuration tool (e.g. Siemens PRONETA)

Signal on alarm

Adjustable, as per NAMUR Recommendation NE 43
- In measuring range 0 to 20 mA (HART is not available with this measuring range):
  Failure current from 0 to 23 mA
- In measuring range 4 to 20 mA:
  Failure current from 2.4 to 23 mA
- Factory setting for failure current for both measuring ranges:
  21.5 mA

Load

Max. 500 Ω

Linearization/transmission behavior

Linear

Digital outputs, passive

Electrical specification

- Passive
- Open collector, max. 30 V, 15 mA
- Maximum voltage drop 3 V

External power supply

When using an onsite auxiliary voltage supply and an onsite digital input:
Recommended minimum auxiliary voltage = 3 V + V_{IHmin}
(V_{IHmin} = minimum input voltage required (high-level input voltage)

PFM function

Minimum pulse width: 500 µs (1 kHz)

Auxiliary voltage

Electrical specification
- Galvanically isolated
- Unregulated, 24 V DC
- Max. 50 mA (per DIO module)

Test voltage

500 V

Cable specification

Max. 2.5 mm^2 (14 AWG)

Current outputs, active

Span

0 to 23 mA

2.4 to 23 mA for HART communication

Signal characterization

Linear

Electrical specification

Output voltage
Max. 24 V

Test voltage
500 V

Cable specification

Cable type
Recommended: shielded cable

Cable specification
Max. 2.5 mm^2 (14 AWG)

Relay outputs

Electrical specification

Relay types
- 1 single-pin changeover contact (alarm relay)
- 2 or 4 single-pin changeover contacts (optional with extension modules)

Maximum load
- Alarm relay: 0.5 A
- All other relays: 2.0 A

Relay switching capacity

Base module (Alarm relay)

Switching voltage	Load (max.)	Switching cycles (min.)
230 V AC, cosΦ = 0.8 to 1	0.1 A	700,000
	0.5 A	450,000
115 V AC, cosΦ = 0.8 to 1	0.1 A	1,000,000
	0.5 A	650,000
24 V DC, L/R = 0 to 1 ms	0.1 A	500,000
	0.5 A	350,000

Extension modules

Switching voltage	Load (max.)	Switching cycles (min.)
230 V AC, cosΦ = 0.8 to 1	0.1 A	700,000
	0.5 A	450,000
	2 A	120,000
115 V AC, cosΦ = 0.8 to 1	0.1 A	1,000,000
	0.5 A	650,000
	2 A	170,000
24 V DC, L/R = 0 to 1 ms	0.1 A	500,000
	0.5 A	350,000
	2 A	150,000

Cable specification Max. 2.5 mm² (14 AWG)

Protocol-specific data

HART

Manufacturer ID	11_h
Device type	$155D_h$
Device revision	1
HART version	
Device description files (DD/DTM)	Device Integration Manager DIM
Device variables	16 user-definable and 16 predefined device variables, dynamic variables PV, SV, TV, QV
Supported features	PDM DD, AMS DD, DTM, Field Xpert DD

PROFIBUS DP

Manufacturer ID	11_h
Device type	$155D_h$
Profile version	
Device database files (GSD files)	Device Integration Manager DIM
Output variables	16 AI blocks, 8 DI blocks
Input variables	4 AO blocks, 8 DO blocks
Supported features	▪ 1 MSCY0 connection (cyclical communication, master class 1 to slave) ▪ 1 MSAC1 connection (acyclical communication, master class 1 to slave) ▪ 2 MSAC2 connections (acyclical communication, master class 2 to slave) ▪ Device lock: The device can be locked using the hardware or software. ▪ Addressing using DIL switches or software ▪ GSD, PDM DD, DTM

Modbus RS485

Protocol	RTU/ASCII
Function codes	03, 04, 06, 08, 16, 23
Broadcast support for function codes	06, 16, 23
Output data	16 measured values (value, unit, status), 8 digital values (value, status)
Input data	4 setpoints (value, unit, status), 8 digital values (value, status), diagnostic information
Supported features	Address can be configured using switch or software

Modbus TCP

TCP port	502
TCP connections	3
Protocol	TCP
Function codes	03, 04, 06, 08, 16, 23
Broadcast support for function codes	06, 16, 23
Output data	16 measured values (value, unit, status), 8 digital values (value, status)

Input data	4 setpoints (value, unit, status), 8 digital values (value, status), diagnostic information
Supported features	Address can be configured using DHCP or software

Ethernet/IP

Log	EtherNet/IP	
ODVA certification	Yes	
Device profile	Generic device (product type: 0x2B)	
Manufacturer ID	$0x049E_h$	
Device type ID	$0x109C_h$	
Polarity	Auto-MIDI-X	
Connections	CIP	12
	I/O	6
	Explicit message	6
	Multicast	3 consumers
Minimum RPI	100 ms (default)	
Maximum RPI	10000 ms	
System integration	EtherNet/IP	EDS
	Rockwell	Add-on-Profile Level 3, Faceplate for Factory Talk SE
IO data	Input (T → O)	Device status and diagnostic message with highest priority Measured values: ▪ 16 AI (analog input) + Status + Unit ▪ 8 DI (discrete input) + Status
	Output (O → T)	Actuating values: ▪ 4 A0 (analog output) + status + unit ▪ 8 DO (discrete output) + Status

PROFINET

Protocol	"Application layer protocol for decentral device periphery and distributed automation", PNIO Version 2.34
Communication type	100 MBit/s
Conformance Class	Conformance Class B
Netload Class	Netload Class II
Baud rate	Automatic 100 Mbps with full-duplex detection
Cycle times	From 32 ms
Device profile	Application interface identifier 0xF600 Generic device
PROFINET interface	1 port, Realtime Class 1 (RT_CLASS_1)
Manufacturer ID	$0x11_h$
Device type ID	$0x859C\ D_h$
Device description files (GSD)	Information and files under: On the product page for the device: Documents/Software → Device drivers On the website under Products/Product Finder
Polarity	Auto-polarity for automatic correction of crossed TxD and RxD pairs
Supported connections	▪ 1 x AR (IO Controller AR) ▪ 1 x AR (IO-Supervisor Device AR connection allowed) ▪ 1 x Input CR (Communication Relation) ▪ 1 x Output CR (Communication Relation) ▪ 1 x Alarm CR (Communication Relation)
Configuration options for measuring device	▪ Web browser ▪ Manufacturer-specific software (FieldCare, DeviceCare) ▪ Device master file (GSD), can be read out via the integrated web server of the measuring device
Configuration of the device name	DCP protocol
Supported functions	▪ Identification & maintenance Simple device identification via: ▪ Process control system ▪ Nameplate ▪ Measured value status The process variables are communicated with a measured value status ▪ Blinking feature (FLASH_ONCE) via the local display for simple device identification and assignment ▪ Device operation via operating tools (e.g. FieldCare, DeviceCare)
System integration	For information on system integration, see the Operating Instructions ▪ Cyclic data transmission ▪ Overview and description of the modules ▪ Status coding ▪ Startup configuration ▪ Factory setting

Web server

The web server enables full access to the device configuration, measured values, diagnostic messages, logbooks and service data via standard WiFi/WLAN/LAN/GSM or 3G routers with a user-defined IP address.

TCP port	80
Supported features	▪ Remote-controlled device configuration(1 session) ▪ Save/restore device configuration (via SD card) ▪ Logbook export (file formats: CSV, FDM) ▪ Access to web server via DTM or Internet Explorer ▪ Login ▪ Web server can be switched off

Power supply

Supply voltage

CM442
Depending on version:
- 100 to 230 V AC, 50/60 Hz
  Maximum permitted fluctuation of mains supply voltage: ± 15 % of nominal voltage
- 24 V AC/DC, 50/60 Hz
  Maximum permitted fluctuation of mains supply voltage: + 20/- 15 % of nominal voltage

CM444 and CM448
Depending on the version,:
- 100 to 230 V AC, 50/60 Hz
  Maximum permitted fluctuation of mains supply voltage: ± 15 % of nominal voltage
- 24 V DC
  Maximum permitted fluctuation of mains supply voltage: + 20/- 15 % of nominal voltage

NOTICE

The device does not have a power switch!
- ► Provide a protected circuit breaker in the vicinity of the device at the place of installation.
- ► The circuit breaker must be a switch or power switch, and must be labeled as the circuit breaker for the device.
- ► Secondary circuits must be separated from mains supply circuits by reinforced insulation or double insulation.

Power consumption

CM442
Depending on supply voltage
- 100 to 230 V AC and 24 V AC:
  Max. 55 VA
- 24 V DC:
  Max. 22 W

CM444 and CM448
Depending on supply voltage
- 100 to 230 V AC:
  Max. 73 VA
- 24 V DC:
  Max. 68 W

Fuse

Fuse not exchangeable

Overvoltage protection

Overvoltage protection: integrated protection against transient overvoltages according to EN 61326-1 (Table 2, industrial environment)

Cable entries

Cable entries for transmitters for the non-hazardous area

Identification of the cable entry on housing base	Suitable gland
B, C, H, I, 1-8	M16x1.5 mm/NPT3/8"/G3/8
A, D, F, G	M20x1.5 mm/NPT1/2"/G1/2
E	-
⏚	M12x1.5 mm
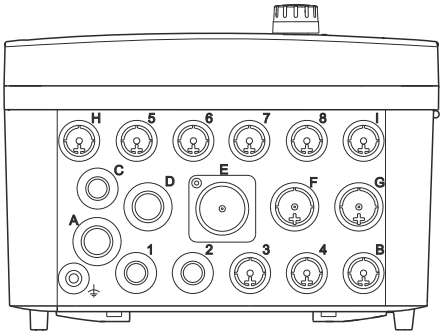	**Recommended assignment** 1-8 Sensors 1-8 A Power supply B Unrestricted use C RS485 Out or M12 Ethernet D,F,G Current outputs and inputs, relays H RS485 In or M12 DP/RS485 I Unrestricted use E Do not use

Cable entries for transmitters with sensor communication module 2DS Ex-i for the hazardous area

Identification of the cable entry on housing base	Suitable gland
B, C, H, I, 1-8	M16x1.5 mm/NPT3/8"/G3/8
A, D, F, G	M20x1.5 mm/NPT1/2"/G1/2
E	-
⏚	M12x1.5 mm
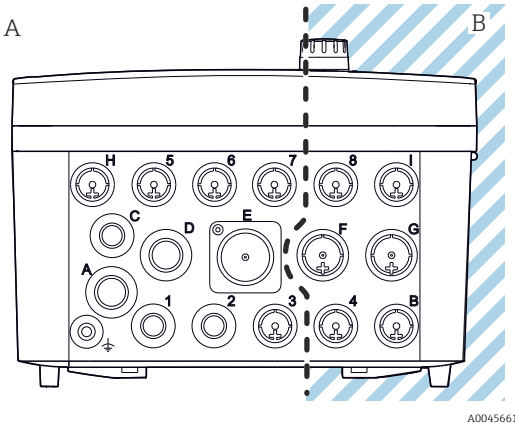 16 A: Non-hazardous area, B: Hazardous area	**Recommended assignment** 1/2/3, 5/6/7 Do not use 4/8, B/F/G/I Intrinsically safe sensors A Power supply C RS485 Out or M12 Ethernet D Current outputs and inputs, relays H RS485 In or M12 DP/RS485 E Do not use

Do not cross cables for the non-hazardous area and the hazardous area in the housing. Select a suitable cable entry for the connection.

Cable specification

Cable gland	Permitted cable diameter
M16x1.5 mm	4 to 8 mm (0.16 to 0.32")
M12x1.5 mm	2 to 5 mm (0.08 to 0.20")
M20x1.5 mm	6 to 12 mm (0.24 to 0.48")
NPT3/8"	4 to 8 mm (0.16 to 0.32")
G3/8	4 to 8 mm (0.16 to 0.32")
NPT1/2"	6 to 12 mm (0.24 to 0.48")
G1/2	7 to 12 mm (0.28 to 0.48")

Cable glands mounted at the factory are tightened with 2 Nm.

Electrical connection

Basic module

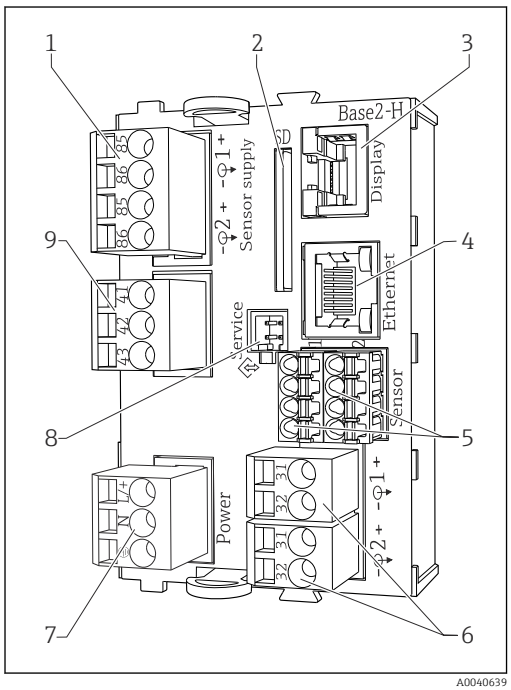

17 *Basic module BASE2-H or -L (two-channel device)*

1 *Power supply for digital fixed cable sensors with Memosens protocol*
2 *SD card slot*
3 *Slot for display cable* [1)]
4 *Ethernet interface*
5 *Connections for 2 Memosens sensors*
6 *Current outputs*
7 *Power connection*
8 *Service interface*
9 *Alarm relay connection*

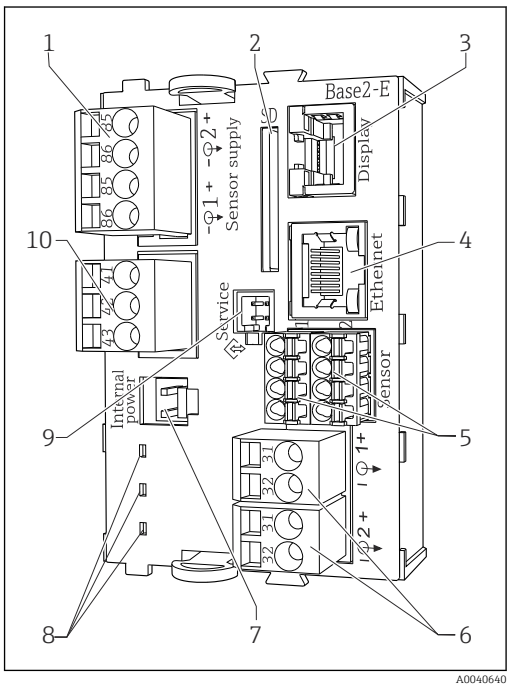

18 *Basic module BASE2-E (four- and eight-channel device)*

1 *Power supply for digital fixed cable sensors with Memosens protocol*
2 *SD card slot*
3 *Slot for display cable* [1)]
4 *Ethernet interface*
5 *Connections for 2 Memosens sensors*
6 *Current outputs*
7 *Socket for internal power supply cable* [1)]
8 *LEDs*
9 *Service interface*
10 *Alarm relay connection*

1) Internal device connection. Do not disconnect the plug!

Connecting the supply voltage for CM442

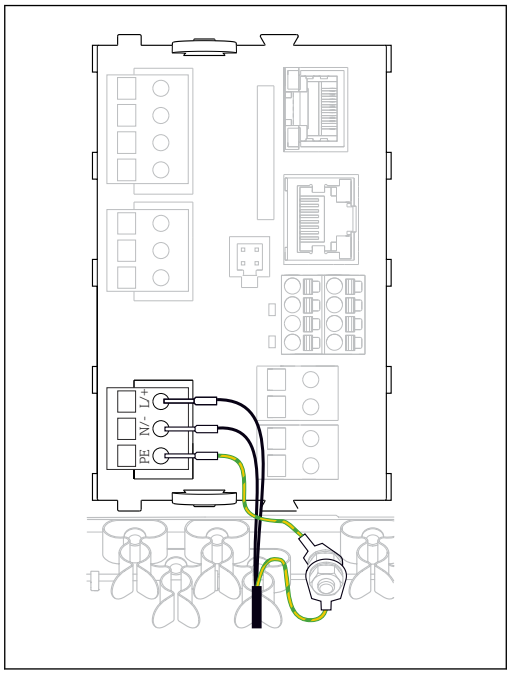

19 *Connecting the power supply using the example of the BASE2-H or -L*

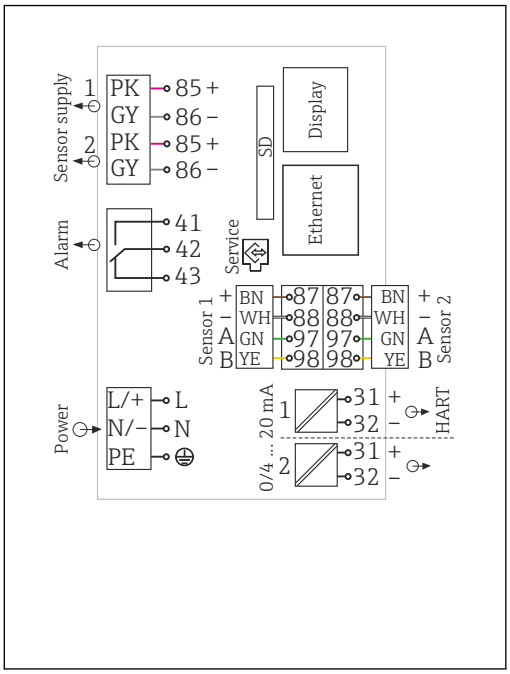

20 *Complete wiring diagram using the example of the BASE2-H or -L*

H Power unit 100 to 230 VAC
L Power unit 24 VAC or 24 VDC

Connecting the supply voltage for CM444 and CM448

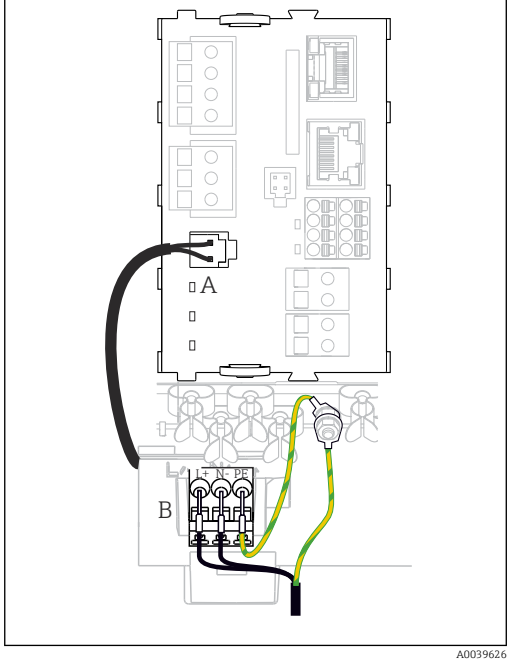

21 *Connecting the power supply using the example of the BASE2-E*

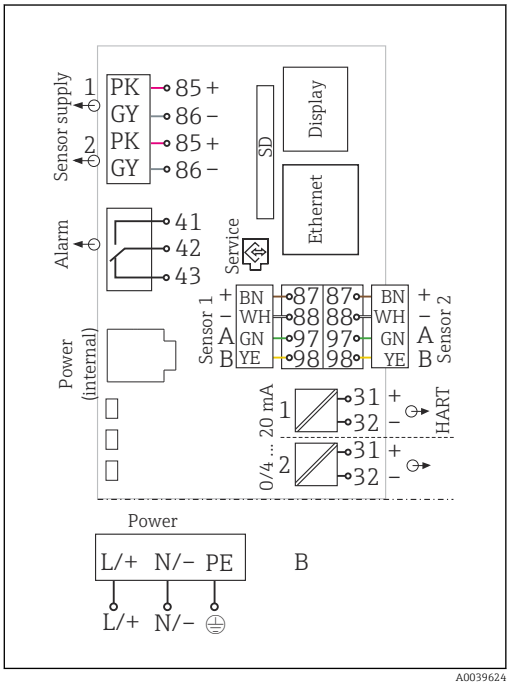

22 *Complete wiring diagram using the example of the BASE2-E and extension power supply unit (B)*

A Internal power supply cable
B Extension power unit

Connecting optional modules

With extension modules you can purchase additional functions for your device.

NOTICE

Unacceptable hardware combinations (due to conflicts in power supply)

Incorrect measurements or total failure of the measuring point as a result of heat build-up or overloading

- ▶ Find out whether the planned extension for your transmitter results in a permitted hardware
- ▶ Please note that if you are extending CM442 to CM444 or CM448, you must additionally fit an extension power supply unit and an extension backplane. You must then also use basic module BASE-E.
- ▶ Remember that the sum of all current inputs and outputs may not exceed 8.
- ▶ Make sure not to use more than 2 "DIO" modules. More "DIO" modules are not permitted.
- ▶ Please contact your Endress+Hauser sales center should you have any questions.

Overview of all the modules available

Module name				
AOR	**2R**	**4R**	**2DS**	**DIO**
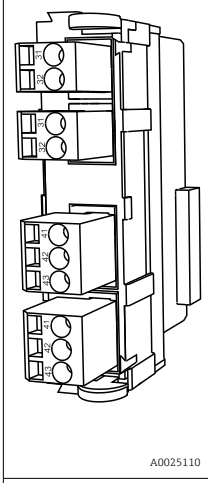 A0025110	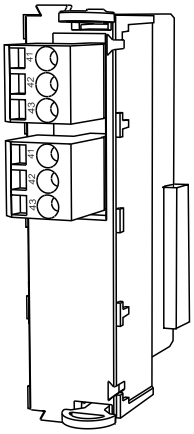 A0025111	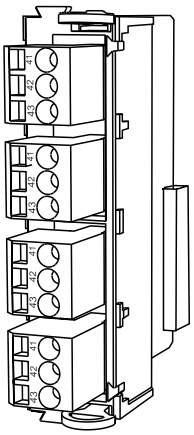	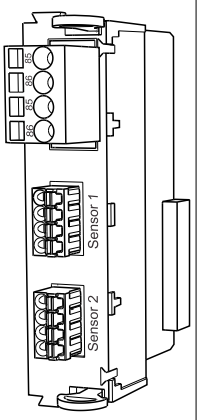 A0025113	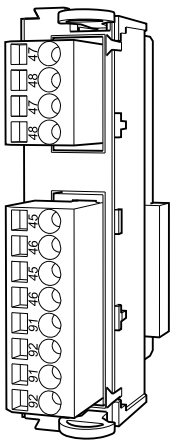 A0025114
▪ 2 x 0/4 to 20 mA analog outputs ▪ 2 relays ▪ Order No. 71111053	▪ 2 relays ▪ Order No. 71125375	▪ 4 relays ▪ Order No. 71125376	▪ 2 digital sensor inputs ▪ 2 power supply systems for digital sensors ▪ Order No. 71135631	▪ 2 digital inputs ▪ 2 digital outputs with auxiliary voltage ▪ Order No. 71135638
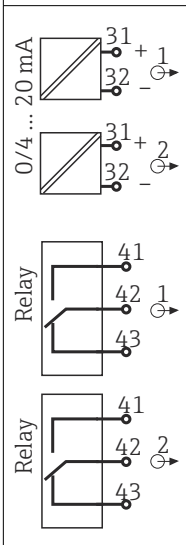 A0033234	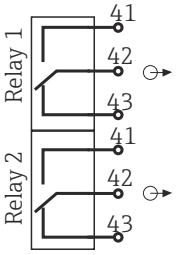 A0033235	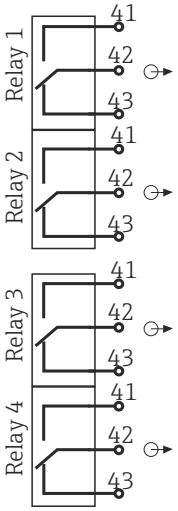 A0025125	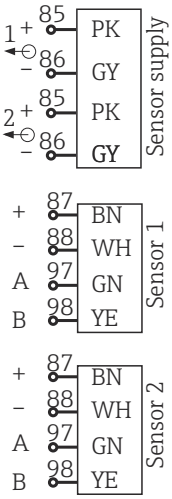 A0025128	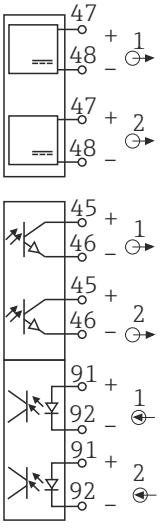 A0025129

Module name			
2AO	**4AO**	**2AI**	**2DS Ex-i**
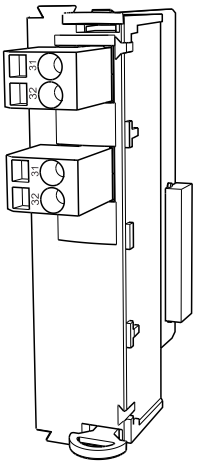 A0025132	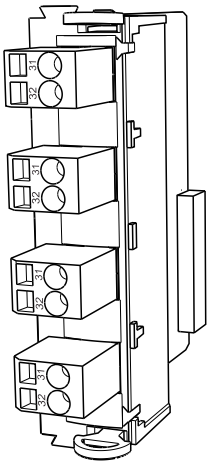 A0025133	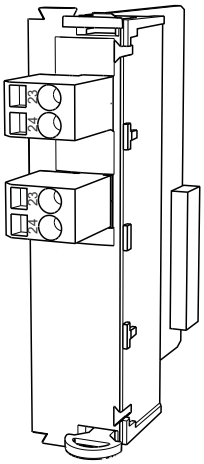 A0025135	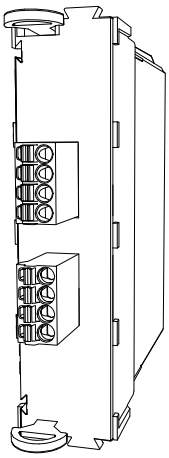 A0046513
▪ 2 x 0/4 to 20 mA analog outputs ▪ Order No. 71135632	▪ 4 x 0/4 to 20 mA analog outputs ▪ Order No. 71135633	▪ 2 x 0/4 to 20mA analog inputs ▪ Order No. 71135639	▪ 2 intrinsically safe digital inputs for Memosens sensors with Ex approval ▪ Inputs on BASE2 module are disabled ▪ Module 2DS EX-i is equipped in the right slot of the device ▪ Order No. 71477718
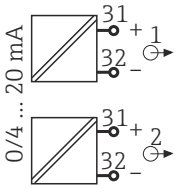 A0025137	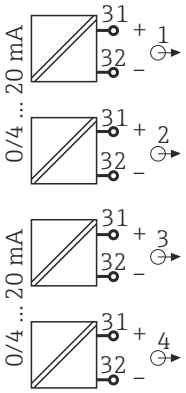 A0025138	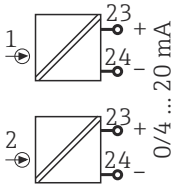 A0025139	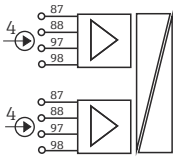 A0046512

Module name	
485DP	**485MB**
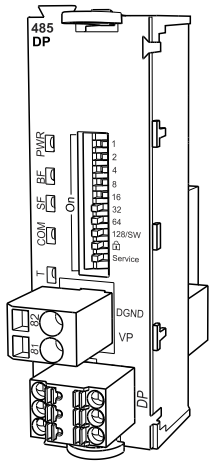 A0050399	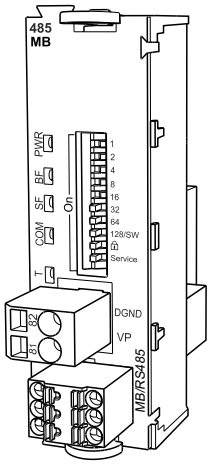 A0050401
▪ 5V power supply for PROFIBUS DP termination ▪ RS485 (PROFIBUS DP) ▪ Order No. 71575177	▪ RS485 (Modbus RS485) ▪ Order No. 71575178
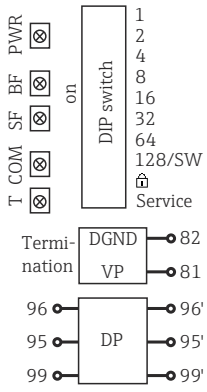 A0050400	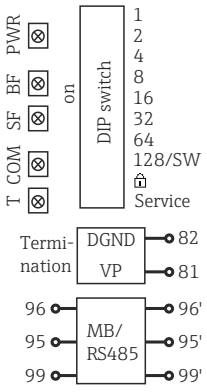 A0050402

PROFIBUS DP (module 485DP)
Contacts 95, 96 and 99 are bridged in the connector. This ensures that PROFIBUS communication is not interrupted if the connector is disconnected.

Protective ground connection

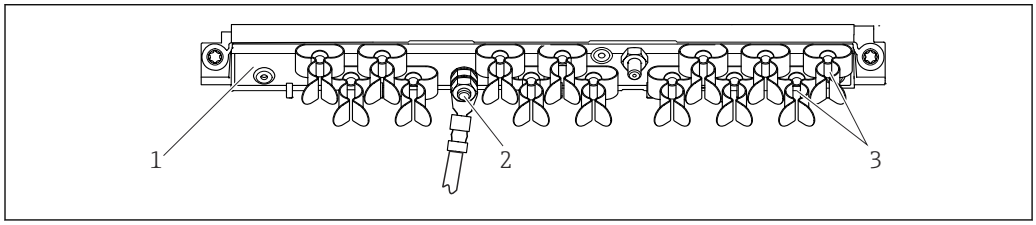

A0048299

23 Cable mounting rail and associated function

1 Cable mounting rail

2 Threaded bolt (protective ground connection, central grounding point)

3 Cable clamps (fixing and grounding the sensor cables)

Sensor connection

Sensor types with Memosens protocol for non-hazardous area

Sensors with Memosens protocol

Sensor types	Sensor cable	Sensors
Digital sensors **without** additional internal power supply	With plug-in connection and inductive signal transmission	▪ pH sensors ▪ ORP sensors ▪ Combined sensors ▪ Oxygen sensors (amperometric and optical) ▪ Conductivity sensors with conductive measurement of conductivity ▪ Chlorine sensors (disinfection)
	Fixed cable	Conductivity sensors with inductive measurement of conductivity
Digital sensors with additional internal power supply	Fixed cable	▪ Turbidity sensors ▪ Sensors for interface measurement ▪ Sensors for measuring the spectral absorption coefficient (SAC) ▪ Nitrate sensors ▪ Optical oxygen sensors ▪ Ion-sensitive sensors

The following rule applies if connecting CUS71D sensors:
- CM442
  - Only one CUS71D is possible; an additional sensor is not permitted.
  - The second sensor input may also not be used for another type of sensor.
- CM444
  No restrictions. All the sensor inputs can be used as required.
- CM448
  - If a CUS71D is connected, the number of sensor inputs that can be used is limited to a maximum of 4.
  - Of these, all 4 inputs can be used for CUS71D sensors.
  - Every combination of CUS71D and other sensors is possible, provided that the total number of connected sensors does not exceed 4.

Types of connection
- Direct connection of the sensor cable to the terminal connector of the , basic module-L, -H or -E (→ 24 ff.)
- Optional: Sensor cable plug connected to the M12 sensor socket on the underside of the device
  With this type of connection, the device is already wired at the factory (→ 27).

Sensor cable connected directly

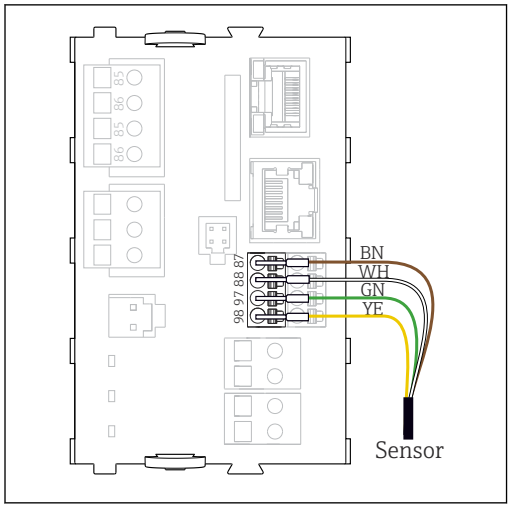

24 *sensors without additional supply voltage*

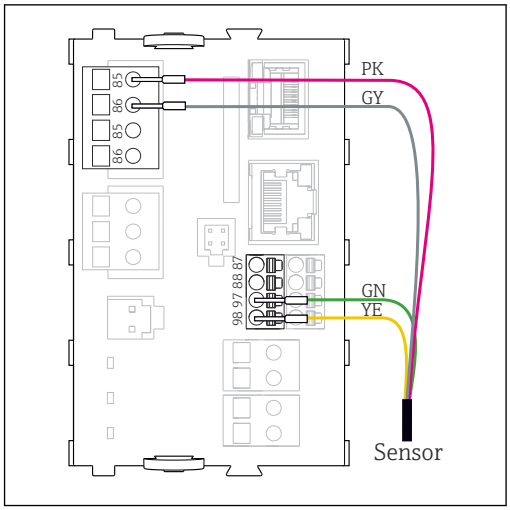

25 *sensors with additional supply voltage*

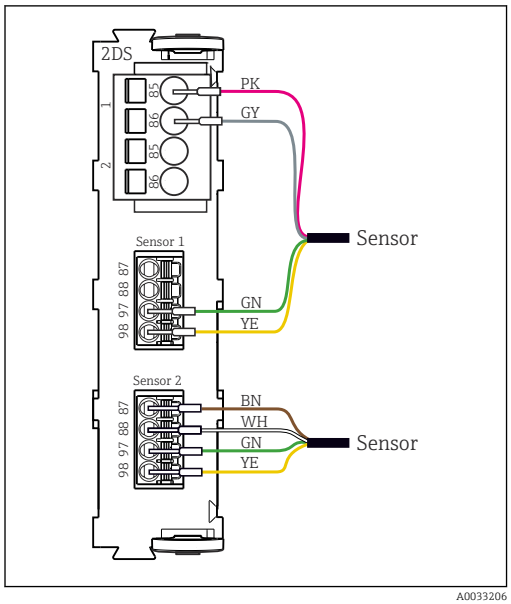

26 *Sensors with and without additional supply voltage at sensor module 2DS*

In the case of a single-cannel device:
The left-hand Memosens input on basic module must be used!

connection via M12 connection
Only for connection in non-hazardous area.

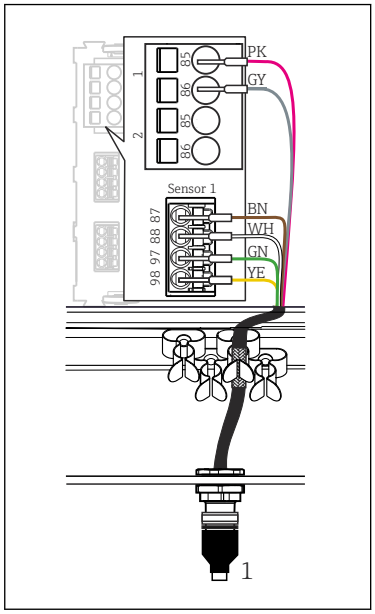

27 *M12 connection (e.g. on sensor module)*

1 *Sensor cable with M12 connector*

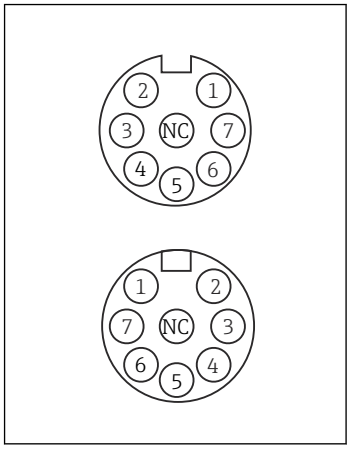

28 *M12 assignment, top: socket, bottom: connector (top view in each case)*

1 *PK (24 V)*
2 *GY (Ground 24 V)*
3 *BN (3 V)*
4 *WH (Ground 3 V)*
5 *GN (Memosens)*
6 *YE (Memosens)*
7, NC *Not connected*

Device versions with a pre-installed M12 socket are ready-wired upon delivery.

Please note the following:
- The internal device wiring is always the same regardless of what kind of sensor you connect to the M12 socket (plug&play).
- The signal or power supply cables are assigned in the sensor head in such a way that the PK and GY power supply cables are either used (e.g. optical sensors) or not (e.g. pH or ORP sensors).

When connecting intrinsically safe sensors to transmitters with sensor communication module type 2DS Ex i, the M12 plug-in connector is **not** permitted.

Connecting intrinsically safe sensors to sensor communication module type 2DS Ex i

Sensor cable connected directly

- Connect the sensor cable to the terminal connector of the sensor communication module 2DS Ex-i.

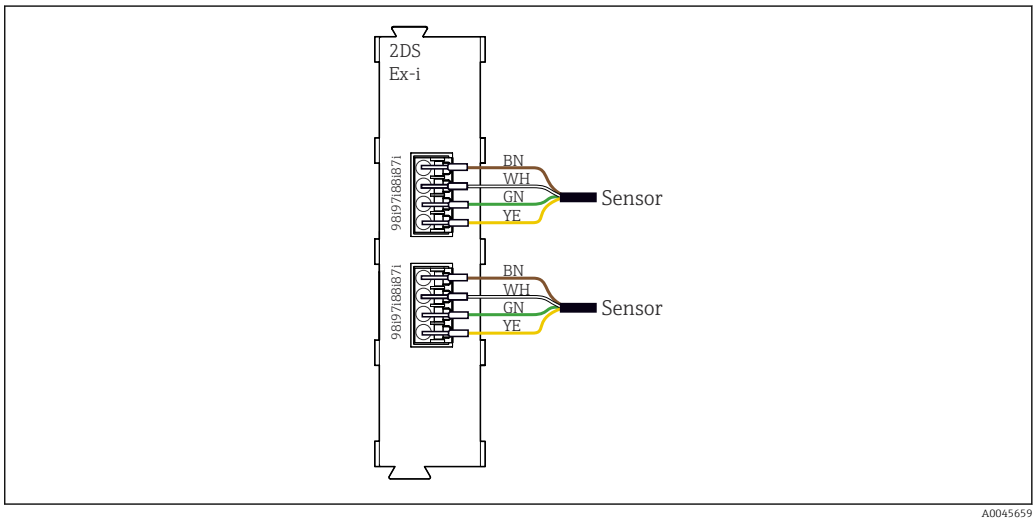

29 *Sensors without additional supply voltage at sensor communication module type 2DS Ex-i*

Intrinsically safe sensors for use in explosive atmospheres may only be connected to the sensor communication module type 2DS Ex-i. Only the sensors covered by the certificates may be connected (see XA).

Performance characteristics

Response time

Current outputs
t_{90} = max. 500 ms for an increase from 0 to 20 mA

Current inputs
t_{90} = max. 330 ms for an increase from 0 to 20 mA

Digital inputs and outputs
t_{90} = max. 330 ms for an increase from low to high

Reference temperature

25 °C (77 °F)

Measurement error for sensor inputs

→ Documentation of the connected sensor

Measurement error for current inputs and outputs

Typical measured errors:
< 20 µA (with current values < 4 mA)
< 50 µA (with current values 4 to 20 mA)
at 25 °C (77 °F) each

Additional measured error depending on the temperature:
< 1.5 µA/K

Frequency tolerance of digital inputs and outputs

≤ 1%

Resolution of current inputs and outputs

< 5 µA

Repeatability

→ Documentation of the connected sensor

Installation

Installation requirements

Mounting plate

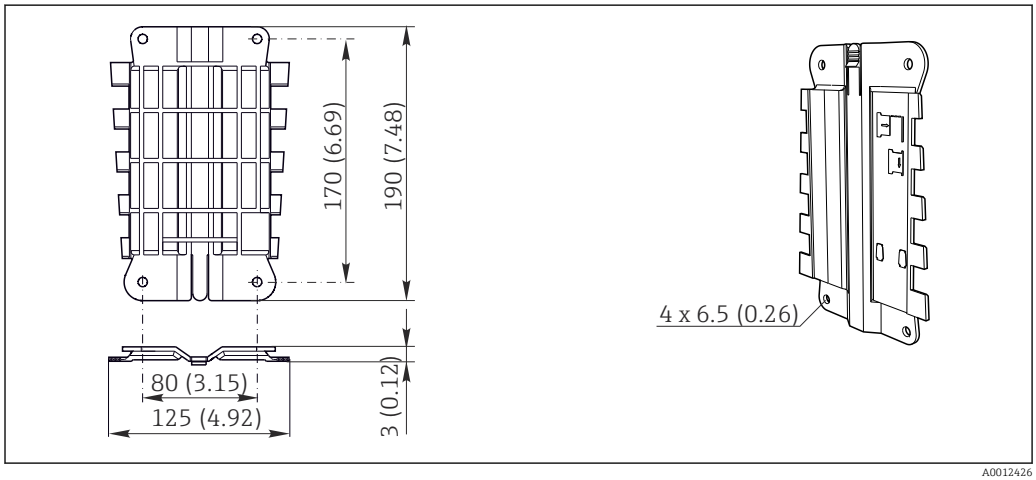

30 Mounting plate. Engineering unit: mm (in)

Weather protection cover

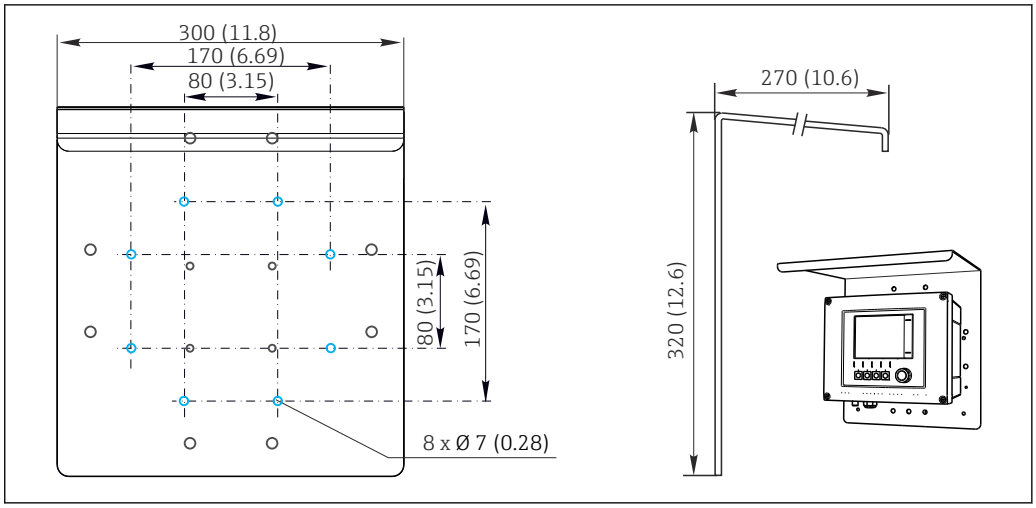

31 *Dimensions in mm (in)*

Installation

Post mounting

You require the post mounting kit (optional) to mount the unit on a pipe, post or railing (square or circular, clamping range 20 to 61 mm (0.79 to 2.40")).

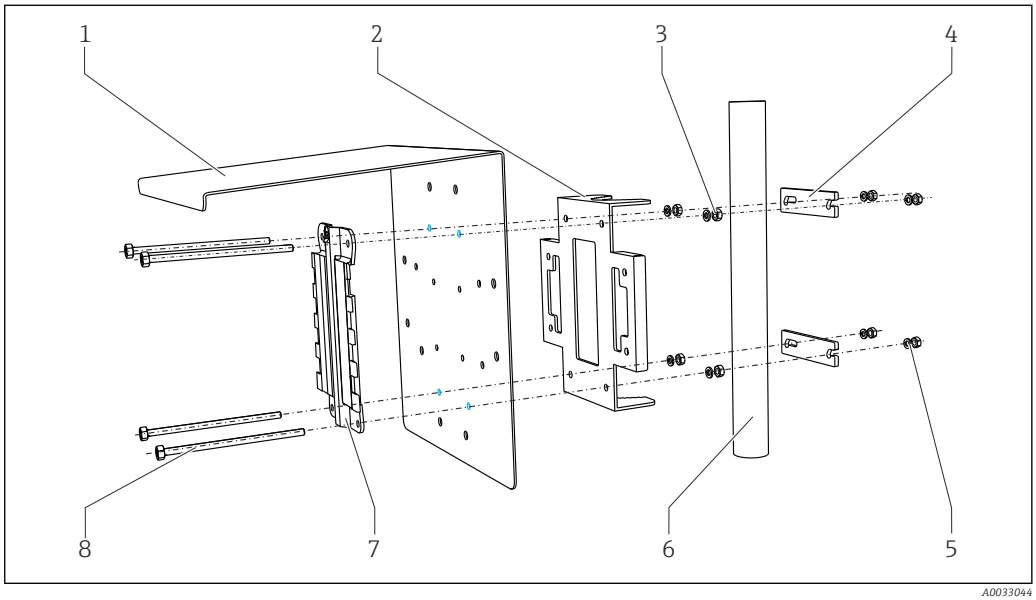

32 *Post mounting*

1	*Weather protection cover (optional)*	5	*Spring washers and nuts (post mounting kit)*
2	*Post mounting plate (post mounting kit)*	6	*Pipe or railing (circular/square)*
3	*Spring washers and nuts (post mounting kit)*	7	*Mounting plate*
4	*Pipe clamps (post mounting kit)*	8	*Threaded rods (post mounting kit)*

Rail mounting

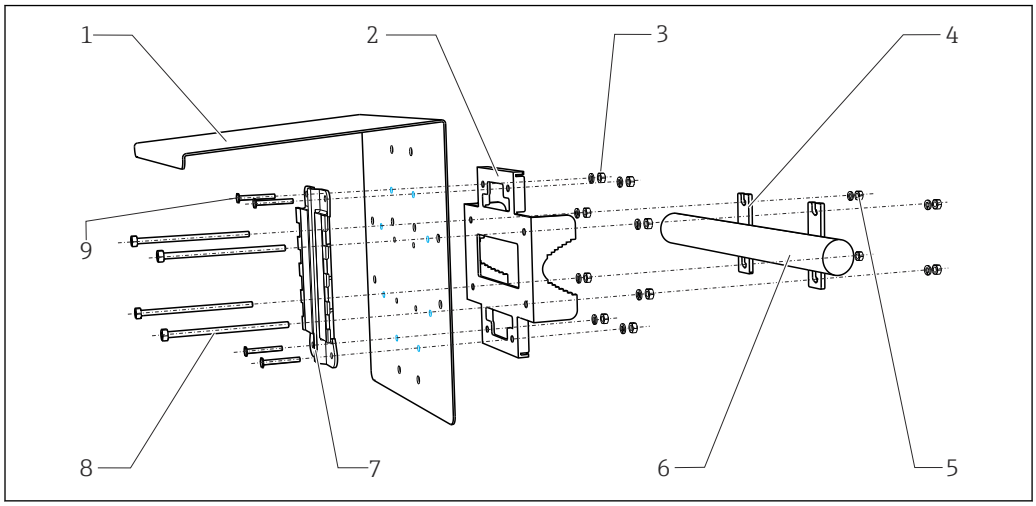

33 *Rail mounting*

1 *Weather protection cover (optional)*
2 *Post mounting plate (post mounting kit)*
3 *Spring washers and nuts (post mounting kit)*
4 *Pipe clamps (post mounting kit)*
5 *Spring washers and nuts (post mounting kit)*
6 *Pipe or railing (circular/square)*
7 *Mounting plate*
8 *Threaded rods (post mounting kit)*
9 *Screws (post mounting kit)*

Wall mounting

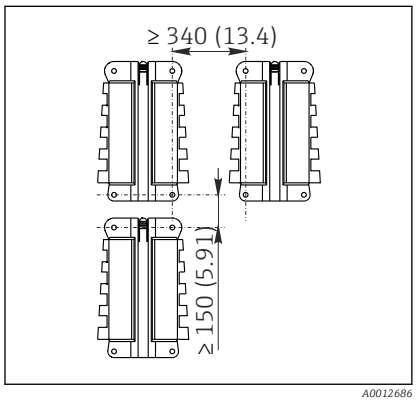

34 *Installation clearance in mm (in)*

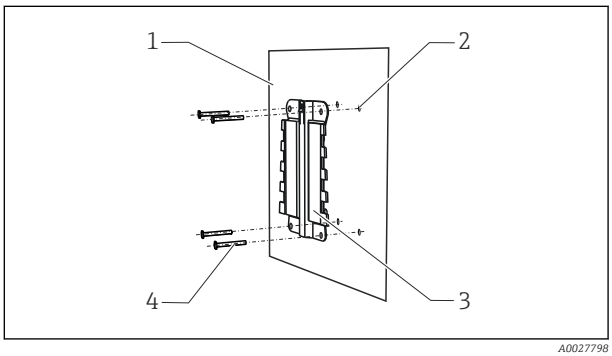

35 *Wall mounting*

1 *Wall*
2 *4 drill holes* [1]
3 *Mounting plate*
4 *Screws Ø 6 mm (not part of scope of supply)*

[1] *The size of the drill holes depends on the wall plugs used. The wall plugs and screws must be provided by the customer.*

Environment

Ambient temperature

CM442

- –20 to 60 °C (-4 to 140 °F)
- -20 to 50 °C (-4 to 122 °F) for the following devices:
  - CM442-BM
  - CM442-IE
  - CM442-CL
  - CM442-UM

CM444

- Generally –20 to 55 °C (-4 to 131 °F), with the exception of packages under the second point in the list
- –20 to 50 °C (-4 to 122 °F) for the following packages:
  - CM444-**M40A7FI******+...
  - CM444-**M40A7FK******+...
  - CM444-**N40A7FI******+...
  - CM444-**N40A7FK******+...
  - CM444-**M4AA5F4******+...
  - CM444-**M4AA5FF******+...
  - CM444-**M4AA5FH******+...
  - CM444-**M4AA5FI******+...
  - CM444-**M4AA5FK******+...
  - CM444-**M4AA5FM******+...
  - CM444-**M4BA5F4******+...
  - CM444-**M4BA5FF******+...
  - CM444-**M4BA5FH******+...
  - CM444-**M4BA5FI******+...
  - CM444-**M4BA5FK******+...
  - CM444-**M4BA5FM******+...
  - CM444-**M4DA5F4******+...
  - CM444-**M4DA5FF******+...
  - CM444-**M4DA5FH******+...
  - CM444-**M4DA5FI******+...
  - CM444-**M4DA5FK******+...
  - CM444-**M4DA5FM******+...
  - CM444-BM
  - CM444-IE
  - CM444-CL
  - CM444-UM
  - CM444-CD

CM448
- Generally –20 to 55 °C (-4 to 131 °F), with the exception of packages under the second point in the list
- –20 to 50 °C (-4 to 122 °F) for the following packages:
  - CM448-***6AA******+...
  - CM448-***8A4******+...
  - CM448-***8A5******+...
  - CM448-**28A3******+...
  - CM448-**38A3******+...
  - CM448-**48A3******+...
  - CM448-**58A3******+...
  - CM448-**68A3******+...
  - CM448-**26A5******+...
  - CM448-**36A5******+...
  - CM448-**46A5******+...
  - CM448-**56A5******+...
  - CM448-**66A5******+...
  - CM448-**22A7******+...
  - CM448-**32A7******+...
  - CM448-**42A7******+...
  - CM448-**52A7******+...
  - CM448-**62A7******+...
  - CM448-**A6A5******+...
  - CM448-**A6A7******+...
  - CM448-**B6A5******+...
  - CM448-**B6A7******+...
  - CM448-**C6A5******+...
  - CM448-**C6A7******+...
  - CM448-**D6A5******+...
  - CM448-**D6A7******+...
  - CM448-BM
  - CM448-IE
  - CM448-CL
  - CM448-UM
  - CM448-CD

Storage temperature

-40 to +80 °C (-40 to 176 °F)

Relative humidity

10 to 95 %, non-condensing

Degree of protection

IP66/67 as per IEC 60529

Housing protection rating NEMA Type 4X as per UL 50E

Vibration resistance

Environmental tests
Vibration test according to DIN EN 60068-2
Vibration test according to DIN EN 60654-3

Post or pipe mounting

Frequency range	10 to 500 Hz (sinusoidal)	
Amplitude	10 to 57.5 Hz:	0.15 mm
	57.5 to 500 Hz:	2 g [1]
Test duration	10 frequency cycles/ spatial axis, in 3 spatial axes (1 oct./min)	

Wall mounting

Frequency range	10 to 150 Hz (sinusoidal)	
Amplitude	10 to 12.9 Hz:	0.75 mm
	12.9 to 150 Hz:	0.5 g [1]
Test duration	10 frequency cycles/ spatial axis, in 3 spatial axes (1 oct./min)	

1) g ... acceleration due to gravity (1 g ≈ 9.81 m/s^2)

Electromagnetic compatibility	Interference emission and interference immunity as per EN 61326-1, class A for industrial areas
Electrical safety	IEC 61010-1, Class I equipment Low voltage: overvoltage category II Environment < 3000 m (< 9840 ft) above MSL
Pollution degree	The product is suitable for pollution degree 2.
Pressure compensation to environment	Filter made of GORE-TEX used as pressure compensation element Ensures pressure compensation to environment and guarantees IP protection.

Mechanical construction

Dimensions

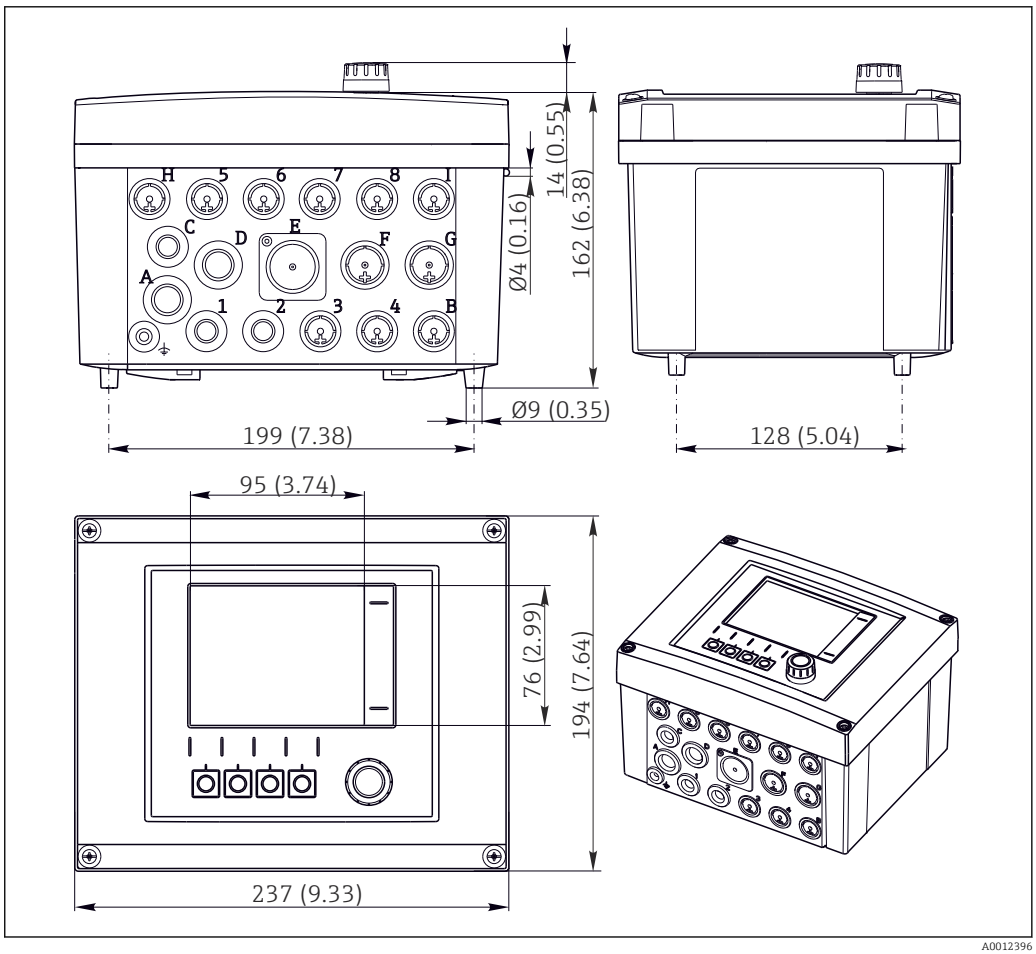

36 Dimensions of field housing in mm (in)

Weight	Complete device	Approx. 2.1 kg (4.63 lbs), depending on the version
	Individual module	Approx. 0.06 kg (0.13 lbs)

Materials

Housing base	PC-FR
Display cover	PC-FR
Display film and soft keys	PE
Housing seal	EPDM
Module side panels	PC-FR
Module housing 2DS Ex-i	PC-PBT
Module covers	PBT GF30 FR
Cable mounting rail	PBT GF30 FR, stainless steel 1.4301 (AISI304)
Clamps	Stainless steel 1.4301 (AISI304)
Screws	Stainless steel 1.4301 (AISI304)
Cable glands	Polyamide V0 as per UL94
Separation element	PC-PBT GF30

Operability

display

Graphic display:
- Resolution: 240 x 160 pixel
- Back light with switch-off function
- Red display background for alarms alerts users to errors
- Transflective display technology for maximum contrast even in bright environments

Operation concept

The simple and structured operating concept sets new standards:
- Intuitive operation with the navigator and soft keys
- Fast configuration of application-specific measurement options
- Easy configuration and diagnosis thanks to plain-text display
- All languages that can be ordered are available in every device



A0025228

37 Easy operation

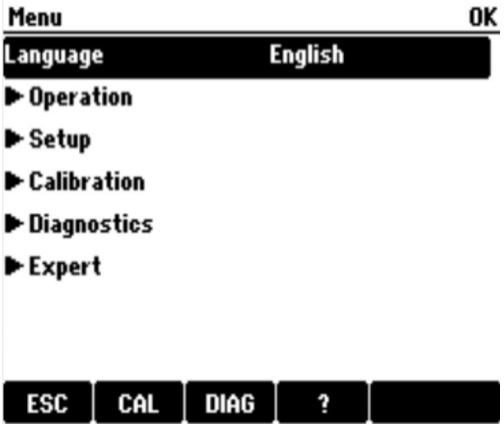

38 Plain-text menu

Local operation

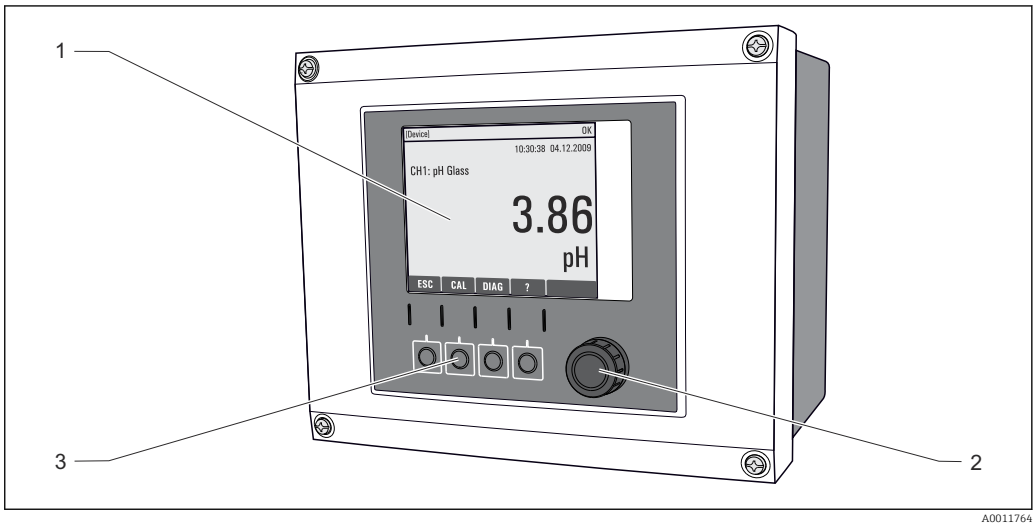

39 Overview of operation

1 Display (with red display background in alarm condition)
2 Navigator (jog/shuttle and press/hold function)
3 Soft keys (function depends on menu)

Remote operation

Via HART (e.g. via HART modem and FieldCare)

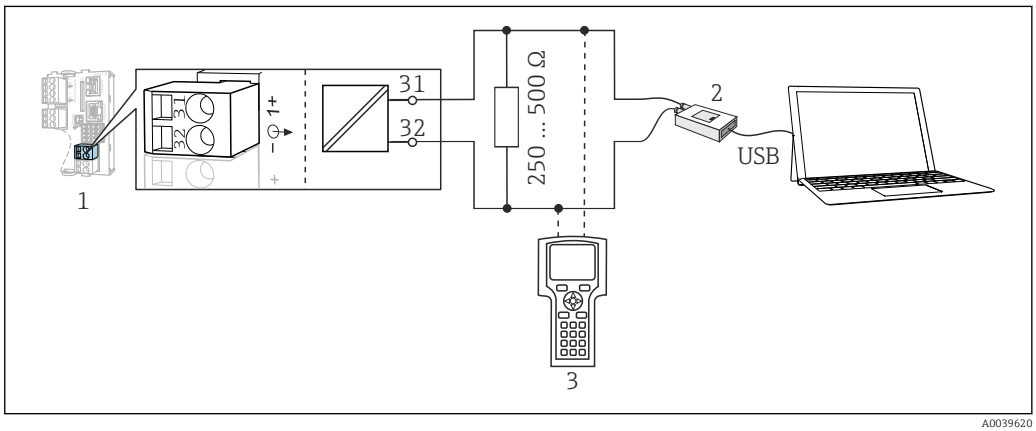

40 HART using modem

1 Device module Base2-L, -H or -E: current output 1 with HART
2 HART modem for connection to PC, e.g. Commubox FXA191 (RS232) or FXA195 [1] (USB)
3 HART handheld terminal

[1] Switch position "on" (substitutes the resistor)

Language packages

The language selected in the product structure is the operating language preset at the factory. All other languages can be selected using the menu.

- English (US)
- German
- Chinese (Simplified, PR China)
- Czech
- Dutch
- French
- Italian
- Japanese
- Polish
- Portuguese
- Russian
- Spanish
- Swedish
- Turkish

- Hungarian
- Croatian
- Vietnamese

The availability of other languages can be checked via the product structure at www.endress.com/cm442 or .../cm444 or .../cm448.

Certificates and approvals

Current certificates and approvals for the product are available at www.endress.com on the relevant product page:

1. Select the product using the filters and search field.
2. Open the product page.
3. Select **Downloads**.

Ordering information

Product page

Product Configurator

1. **Configure**: Click this button on the product page.
2. Select **Extended selection**.
   ↳ The Configurator opens in a separate window.
3. Configure the device according to your requirements by selecting the desired option for each feature.
   ↳ In this way, you receive a valid and complete order code for the device.
4. **Accept**: Add the configured product to the shopping cart.

For many products, you also have the option of downloading CAD or 2D drawings of the selected product version.

5. **CAD**: Open this tab.
   ↳ The drawing window is displayed. You have a choice between different views. You can download these in selectable formats.

Scope of delivery

The scope of delivery comprises:
- 1 multichannel transmitter in the version ordered
- 1 mounting plate
- 1 wiring label (attached at the factory to the inside of the display cover)
- 1 printed copy of the Brief Operating Instructions in the language ordered
- Separation element (pre-installed on hazardous area version type 2DS Ex-i)
- Safety instructions for the hazardous area (for hazardous area version type 2DS Ex-i)

Accessories

The following are the most important accessories available at the time this documentation was issued.

Listed accessories are technically compatible with the product in the instructions.

1. Application-specific restrictions of the product combination are possible.
   Ensure conformity of the measuring point to the application. This is the responsibility of the operator of the measuring point.

2. Pay attention to the information in the instructions for all products, particularly the technical data.
3. For accessories not listed here, please contact your Service or Sales Center.

Device-specific accessories

Weather protection cover

CYY101
- Weather protection cover for field devices
- Absolutely essential for field installation
- Material: stainless steel 1.4301 (AISI 304)
- Order No. CYY101-A

Post mounting kit

Post mounting kit CM44x
- For securing the field housing to horizontal and vertical posts and pipes
- Order No. 71096920

Measuring cables

Memosens data cable CYK10
- For digital sensors with Memosens technology

Technical Information TI00118C

Memosens data cable CYK11
- Extension cable for digital sensors with Memosens protocol

Technical Information TI00118C

Sensors

Glass electrodes

Memosens CPS11E
- pH sensor for standard applications in process and environmental engineering
- Digital with Memosens 2.0 technology

Technical Information TI01493C

Memosens CPS41E
- pH sensor for process technology
- With ceramic junction and KCl liquid electrolyte
- Digital with Memosens 2.0 technology

Technical Information TI01495C

Memosens CPS71E
- pH sensor for chemical process applications
- With ion trap for poison-resistant reference
- Digital with Memosens 2.0 technology

Technical Information TI01496C

Memosens CPS91E
- pH sensor for heavily polluted media
- With open aperture
- Digital with Memosens 2.0 technology

Technical Information TI01497C

Memosens CPS31E
- pH sensor for standard applications in drinking water and swimming pool water
- Digital with Memosens 2.0 technology

Technical Information TI01574C

Memosens CPS61E
- pH sensor for bioreactors in life sciences and for the food industry
- Digital with Memosens 2.0 technology

Technical Information TI01566C

Memosens CPF81E
- pH sensor for mining operations, industrial water and wastewater treatment
- Digital with Memosens 2.0 technology

Technical Information TI01594C

Enamel pH electrodes

Ceramax CPS341D
- pH electrode with pH-sensitive enamel
- Meets highest demands of measuring accuracy, pressure, temperature, sterility and durability

Technical Information TI00468C

ORP sensors

Memosens CPS12E
- ORP sensor for standard applications in process and environmental engineering
- Digital with Memosens 2.0 technology

Technical Information TI01494C

Memosens CPS42E
- ORP sensor for process technology
- Digital with Memosens 2.0 technology

Technical Information TI01575C

Memosens CPS72E
- ORP sensor for chemical process applications
- Digital with Memosens 2.0 technology

Technical Information TI01576C

Memosens CPF82E
- ORP sensor for mining operations, industrial water and wastewater treatment
- Digital with Memosens 2.0 technology

Technical Information TI01595C

Memosens CPS92E
- ORP sensor for use in heavily polluted media
- Digital with Memosens 2.0 technology

Technical Information TI01577C

Memosens CPS62E
- ORP sensor for hygienic and sterile applications
- Digital with Memosens 2.0 technology

Technical Information TI01604C

pH ISFET sensors

Memosens CPS47E
- ISFET sensor for pH measurement
- Digital with Memosens 2.0 technology

Technical Information TI01616C

Memosens CPS77E
- Sterilizable and autoclavable ISFET sensor for pH measurement
- Digital with Memosens 2.0 technology

Technical Information TI01396

Memosens CPS97E
- ISFET sensor for pH measurement
- Digital with Memosens 2.0 technology

Technical Information TI01618C

Combined pH/ORP sensors

Memosens CPS16E
- pH/ORP sensor for standard applications in process technology and environmental engineering
- Digital with Memosens 2.0 technology

Technical Information TI01600C

Memosens CPS76E
- pH/ORP sensor for process technology
- Digital with Memosens 2.0 technology

Technical Information TI01601C

Memosens CPS96E
- pH/ORP sensor for heavily polluted media and suspended solids
- Digital with Memosens 2.0 technology

Technical Information TI01602C

Conductivity sensors with inductive measurement of conductivity

Indumax CLS50D
- High-durability inductive conductivity sensor
- For standard and hazardous area applications
- With Memosens technology

Technical Information TI00182C

Indumax CLS54D
- Inductive conductivity sensor
- With certified, hygienic design for food, beverages, pharmaceuticals, and biotechnology

Technical Information TI00508C

Conductivity sensors with conductive measurement of conductivity

Memosens CLS15E
- Digital conductivity sensor for measurements in pure and ultrapure water
- Conductive measurement
- With Memosens 2.0

Technical Information TI01526C

Memosens CLS16E
- Digital conductivity sensor for measurements in pure and ultrapure water
- Conductive measurement
- With Memosens 2.0

Technical Information TI01527C

Memosens CLS21E
- Digital conductivity sensor for media with medium or high conductivity
- Conductive measurement
- With Memosens 2.0

Technical Information TI01528C

Memosens CLS82E
- Hygienic conductivity sensor
- Digital with Memosens 2.0 technology

Technical Information TI01529C

Oxygen sensors

Memosens COS22E
- Hygienic amperometric oxygen sensor with maximum measurement stability over multiple sterilization cycles
- Digital with Memosens 2.0 technology

Technical Information TI01619C

Memosens COS51E
- Amperometric oxygen sensor for water, wastewater and utilities
- Digital with Memosens 2.0 technology

Technical Information TI01620C

Oxymax COS61D
- Optical oxygen sensor for drinking water and industrial water measurement
- Measuring principle: quenching
- With Memosens technology

Technical Information TI00387C

Memosens COS81E
- Hygienic optical oxygen sensor with maximum measurement stability over multiple sterilization cycles
- Digital with Memosens 2.0 technology

Technical Information TI01558C

Disinfection sensors

Memosens CCS51D
- Sensor for measuring free available chlorine

Technical Information TI01423C

Ion-selective sensors

ISEmax CAS40D
- Ion selective sensors

Technical Information TI00491C

Turbidity sensors

Turbimax CUS51D
- For nephelometric measurements of turbidity and solids in wastewater
- 4-beam scattered light method
- With Memosens technology

Technical Information TI00461C

Turbimax CUS52D
- Hygienic Memosens sensor for turbidity measurement in drinking water, process water and in utilities
- With Memosens technology

Technical Information TI01136C

SAC and nitrate sensors

Viomax CAS51D
- SAC and nitrate measurement in drinking water and wastewater
- With Memosens technology

Technical Information TI00459C

Interface measurement

Turbimax CUS71D
- Immersion sensor for interface measurement
- Ultrasonic interface sensor

Technical Information TI00490C

Spectrometer sensors

Memosens Wave CAS80E
- Measurement of various parameters in liquid media
- With Memosens technology

Technical Information TI01522C

Fluorescence sensors

Memosens CFS51
- Sensor for fluorescence measurement
- With Memosens technology

Technical Information TI01630C

Communication-specific accessory

Device Care SFE100
- Configuration of Endress+Hauser devices
- Fast and easy installation, online application updates, one-click connection to devices
- Automatic hardware identification and driver catalog update
- Device configuration with DTMs

Technical Information Device Care SFE100, TI01134S

Commubox FXA195
Intrinsically safe HART communication with FieldCare via the USB port

Technical Information TI00404F

Commubox FXA291
Connects the CDI interface of measuring devices with the USB port of the computer or laptop

Technical Information TI00405C

Wireless HART adapter SWA70
- Wireless device connection
- Easily integrated, offers data protection and transmission safety, can be operated in parallel with other wireless networks, minimum cabling complexity

Technical Information TI00061S

Field Data Manager Software MS20/21
- PC software for central data management
- Visualization of series of measurements and logbook events
- SQL database for secure data storage

FieldCare SFE500
- Universal tool for field device configuration and management
- Supplied with a complete library of certified DTMs (Device Type Manager) for operation of Endress +Hauser field devices
- Order according to product order structure

Memobase Plus CYZ71D
- PC software to support laboratory calibration
- Visualization and documentation of sensor management
- Sensor calibrations stored in database

Technical Information TI00502C

Service-specific accessories

Additional functionality

Hardware extension modules

Kit, extension module AOR
- 2 x relay, 2 x 0/4 to 20 mA analog output
- Order No. 71111053

Kit, extension module 2R
- 2 x relay
- Order No. 71125375

Kit, extension module 4R
- 4 x relay
- Order No. 71125376

Kit, extension module 2AO
- 2 x 0/4 to 20 mA analog output
- Order No. 71135632

Kit, extension module 4AO
- 4 x analog output 0/4 to 20 mA
- Order No. 71135633

Kit, extension module 2DS
- 2 x digital sensor, Memosens
- Order No. 71135631

Kit extension module 2DS Ex-i
- 2 x digital sensor, Memosens, Ex approval
- Order No. 71477718

Kit, extension module 2AI
- 2 x 0/4 to 20 mA analog input
- Order No. 71135639

Kit, extension module DIO
- 2 x digital input
- 2 x digital output
- Auxiliary voltage supply for digital output
- Order No. 71135638

Upgrade kit, extension module 485DP
- Extension module 485DP
- PROFIBUS DP
- Order No. 71575177

Upgrade kit, extension module 485MB
- Extension module 485MB
- Modbus RS485
- Order No. 71575178

Kit CM442: upgrade kit to CM444/CM448
- Extension power supply unit 100 to 230 V AC and extension backplane
- Base module BASE2-E
- You must quote the serial number of the device when ordering the kit.
- Order No. 71470973

Kit CM442: upgrade kit to CM444/CM448
- Extension power supply unit 24 V DC and extension backplane
- Base module BASE2-E
- You must quote the serial number of the device when ordering the kit.
- Order No. 71470975

Firmware and activation codes

SD card with Liquiline firmware
- Industrial Flash Drive, 1 GB
- Order No. 71127100

You must quote the serial number of the device when ordering the activation code.

Kit CM442: activation code for 2nd digital sensor input
Order No. 71114663

Activation code for feedforward control
- Requires current input or fieldbus communication
- Order No. 71211288

Activation code for measuring range switch
- Requires digital inputs or fieldbus communication
- Order No. 71211289

Activation code for ChemocleanPlus
- Requires relays or digital outputs or fieldbus communication and optional digital inputs
- Order No. 71239104

Activation code for Heartbeat Verification and Monitoring
Order No. 71367524

Activation code for mathematics
- Formula editor
- Order No. 71367541

Activation code for Ethernet/IP and web server
Order No. XPC0018

Activation code for Modbus TCP and web server
Order No. XPC0020

Activation code for web server for BASE2
Order No. XPC0021

Activation code for PROFINET and web server Base2
Order No. XPC0022

Activation code for HART
Order No. XPC0023

Activation code for Profibus DP for module 485
Order No. XPC0024

Activation code for module 485 Modbus RS485
Order No. XPC0025

Activation code for Liquiline inputs/outputs
Order No. XPC0026

Activation code for additional functions
Order No. XPC0027

System components

RIA14, RIA16
- Field display unit for integration into 4-20 mA circuits
- RIA14 in flameproof metal enclosure

Technical Information TI00143R and TI00144R

RIA15
- Process display unit, Digital display unit for integration into 4-20 mA circuits
- Panel mounting
- With optional HART communication

Technical Information TI01043K

Other accessories

SD card
- Industrial Flash Drive, 1 GB
- Order number: 71110815

Cable glands

Kit CM44x: gland M
- Set, 6 pieces
- Order number: 71101768

Kit CM44x: gland NPT
- Set, 6 pieces
- Order number: 71101770

Kit CM44x: gland G
- Set, 6 pieces
- Order number: 71101771

Kit CM44x: dummy plug for cable gland
- Set, 6 pieces
- Order number: 71104942

M12 built-in socket and cable junction with Velcro strip

Kit CM442/CM444/CM448/CSF48: M12 built-in socket for digital sensors
- Pre-terminated
- Order No. 71107456

Kit CM442/CM444/CM448/CSF48: M12 built-in socket for PROFIBUS DP/Modbus RS485
- B-coded, pre-terminated
- Order No. 71140892

Kit CM442/CM444/CM448/CSF48: M12 built-in socket for Ethernet
- D-coded, pre-terminated
- Order No. 71140893

Kit: external CDI socket, complete
- Retrofit kit for CDI interface, with terminated connecting cables
- Order No. 51517507

Cable junction with Velcro strip
- 4 pieces, for sensor cable
- Order No. 71092051



Endress+Hauser

People for Process Automation

Consultas y ventas: AQUAREP · www.aquarep.com.ar · info@aquarep.com.ar · WhatsApp +54 9 11 6091-0087