TI01136C/07/EN/08.25-00
71744250
2025-10-20

Technical Information
Turbimax CUS52D

Turbidity sensor



Application

Turbimax CUS52D is a sensor for measuring turbidity and low solids content in drinking water and process water applications.

- Turbidity measurement at all stages of the water treatment process
- Final turbidity measurement in outlet of waterworks
- Turbidity measurement in inlet of waterworks
- Turbidity measurement for filter monitoring and filter backwashing
- Turbidity measurement in drinking water networks
- Turbidity measurement in saline media (plastic sensor only)

Your benefits

- Turbidity measurement in accordance with ISO 7027
- The design with the 2" clamp means it can be mounted directly in pipes and fits into CUA252 (PE 100) and CUA262 (stainless steel) flow assemblies.
- Immersion version can be installed in open channels and basins
- Can be used at high temperatures and high pressures
- Standardized communication (Memosens technology) enables "plug and play"
- Intelligent sensor - all characteristics and calibration values are stored in the sensor
- Customer calibrations with 1 to 6 points can be performed in the lab or at place of installation
- Completely safe, as the optical source requires little power to operate

Endress+Hauser
People for Process Automation

Consultas y ventas: AQUAREP · www.aquarep.com.ar · info@aquarep.com.ar · WhatsApp +54 9 11 6091-0087

Table of contents

Function and system design 3
Measuring principle 3
Measuring system 4
Communication and data processing 6
Dependability 7

Input 7
Measured variable 7
Measuring range 7

Power supply 7
Electrical connection 7

Performance characteristics 9
Reference operating conditions 9
Maximum measurement error 9
Repeatability 9
Long-term reliability 9
Response time 9
Detection limit 9

Installation 9
Orientation 9

Environment 13
Ambient temperature range 13
Storage temperature 13
Degree of protection 13

Process 13
Process temperature range 13
Process pressure range 13
Flow limit 14

Mechanical construction 14
Dimensions 14
Weight 17
Materials 17
Process connections 17

Certificates and approvals 18
Ex-approval 18
NAMUR 18
Device safety 18
ISO 7027 18
Marine certifications 18
Additional certification 18

Ordering information 18
Scope of delivery 18
Product page 18
Product Configurator 18

Accessories 19
Assemblies 19
Holder 20
Mounting material 20
Compressed air cleaning 20
Ultrasonic cleaning 22
Mechanical cleaning 22
Bubble trap 22
Solid state reference 22
Calibration vessel 22

Function and system design

Measuring principle

The sensor works using the 90° light scattering principle in accordance with ISO 7027 and meets all the requirements of this standard (no divergence and a maximum convergence of 1.5°). The ISO 7027 standard is obligatory for turbidity measurements in the drinking water sector.

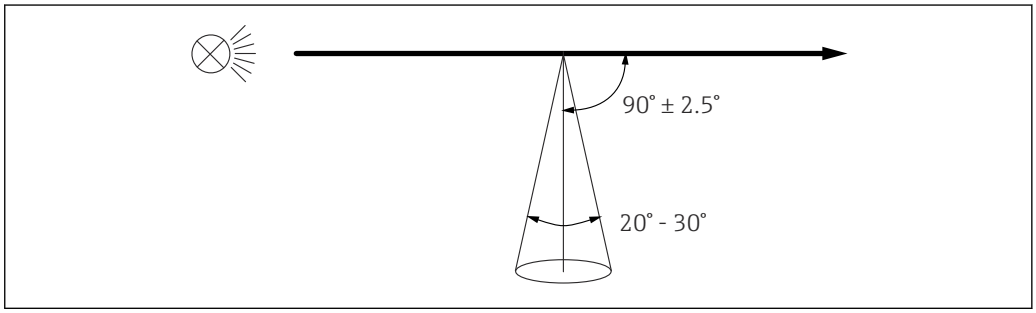

1 *Measurement in accordance with ISO 7027*

Measurement is done using a wavelength of 860 nm.

Sensor monitoring

The optical signals are continuously monitored and analyzed for plausibility. If inconsistencies occur, an error message is output via the transmitter. The function is disabled by default.

Applications

The formazine factory calibration is used as the basis for precalibrating additional applications and optimizing them for the different media characteristics.

Application	Specified operational range
Formazine	0.000 to 1000 FNU
Kaolin	0 to 150 mg/l
PSL	0 to 125 度
Diatomite	0 to 550 mg/l

To adapt to a specific application, customer calibrations can be carried out with up to 6 points.

- During initial commissioning or calibration at the CM44x , select the appropriate application for your area of operation.

Application	Field of application	Unit
Formazine	Drinking water, process water	FNU; FTU; NTU; TE/F; EBC; ASBC
Kaolin	Drinking water, filterable matter, industrial water	mg/l; g/l; ppm
PSL	The calibration standard commonly used in Japan for drinking water turbidity	度 (dough)
Diatomite	Mineral-based solids (sand)	mg/l; g/l; ppm

1 to 6 points can be calibrated for all applications.

NOTICE

Multiple scattering

If the specific operational range is exceeded, the measured value displayed by the sensor can decrease despite increasing turbidity. The indicated operational range is reduced in the case of highly absorbing (e.g. dark) media.

- In the case of highly absorbing (e.g. dark) media, determine the operational range experimentally beforehand.

Measuring system

A complete measuring system comprises:
- Turbimax CUS52D turbidity sensor
- Liquiline CM44x multichannel transmitter
- Assembly:
  - CUA252 flow assembly (only possible for stainless steel sensor) or
  - CUA262 flow assembly (only possible for stainless steel sensor) or
  - Immersion assembly Flexdip CYA112 and holder Flexdip CYH112
  - Immersion assembly Dipfit CLA140 or
  - Retractable assembly, e.g. Cleanfit CUA451
- Or direct installation via pipe connection (only possible for stainless steel sensor)
  - Clamp 2" or
  - Varivent

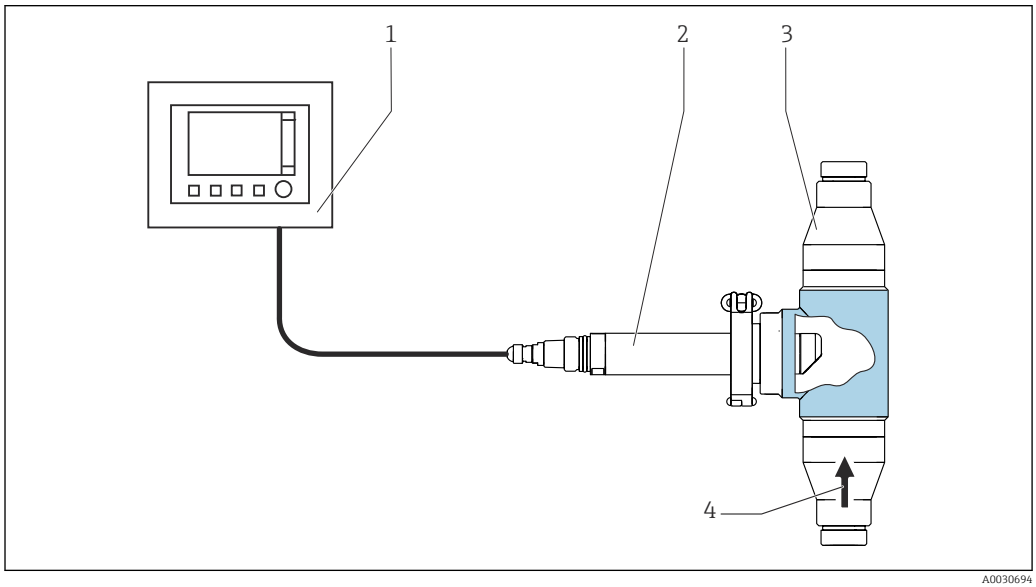

2 Example of measuring system with CUA252 flow assembly, for stainless steel sensor

1 Liquiline CM44x multichannel transmitter
2 Turbimax CUS52D turbidity sensor
3 CUA252 flow assembly
4 Direction of flow

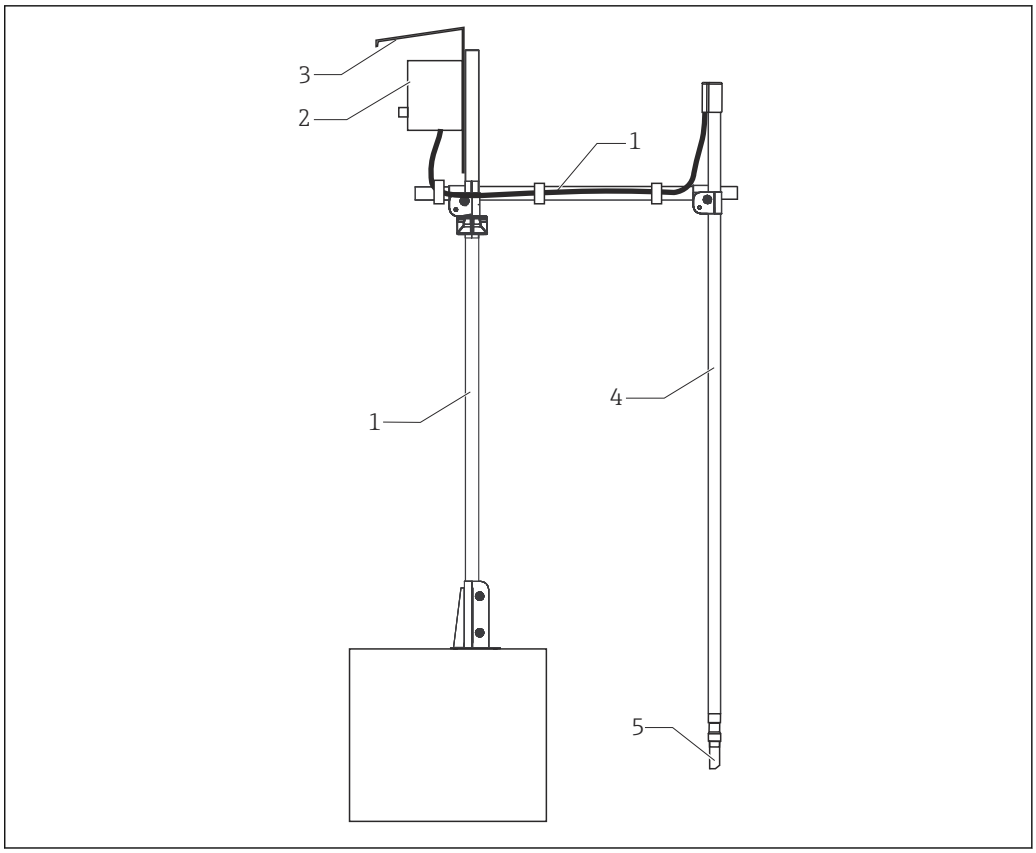

3 Example of measuring system with immersion assembly

1 Flexdip CYH112 holder
2 Liquiline CM44x multichannel transmitter
3 Weather protection cover
4 Flexdip CYA112 immersion assembly
5 Turbimax CUS52D turbidity sensor

This type of installation is particularly suitable for strong or turbulent flow > 0.5 m/s (1.6 ft/s) in basins or channels.

Sensor structure

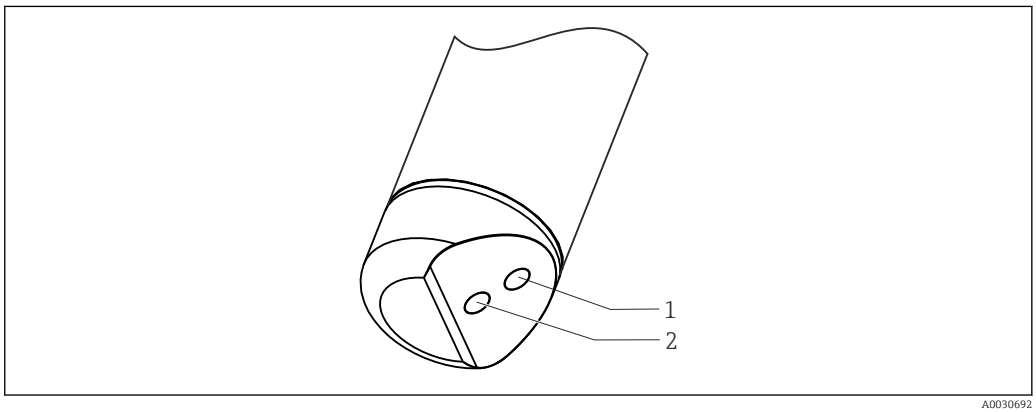

4 Arrangement of light source and light receiver

1 Light receiver
2 Light source

Solid state reference

The solid state reference can be used to check the functionality of the sensor.

During factory calibration, each Calkit solid state reference is matched specifically to a special CUS52D sensor and can be used only with this sensor. Therefore, the Calkit solid state reference and the sensor are permanently assigned (married) to one another.

The following Calkits solid state references are available:
- 5 FNU (NTU)
- 20 FNU (NTU)
- 50 FNU (NTU)

The reference value indicated on the Calkit solid state reference is reproduced with an accuracy of ± 10% when the sensor is operating correctly.

The CUY52 solid state reference with approx. 4.0 FNU/NTU is used to check the function of any turbidity sensors CUS52D sensors. The solid state reference is not assigned to a specific sensor and delivers measured values in the range of 4.0 FNU ± 1.5 FNU/NTU with all turbidity sensors CUS52D sensors.

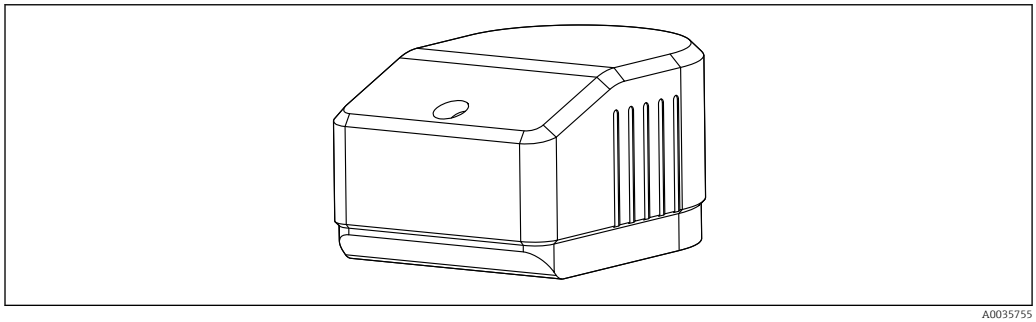

A0035755

5 Solid state reference

Calibration vessel

The CUY52 calibration vessel allows the sensors to be validated quickly and reliably. This makes it easier to adapt to the actual measuring point by creating basic conditions that are reproducible (e.g., vessels with the least backscattering or shadowing of interfering light sources). There are two different types of calibration vessel into which the calibration solution (e.g., formazine) can be filled.

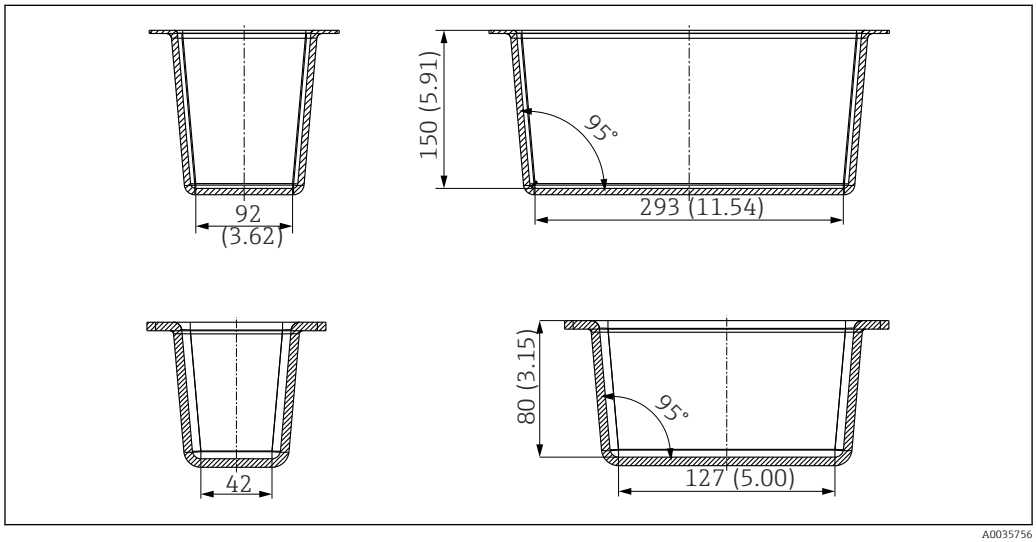

A0035756

6 Large calibration vessel (top) and small calibration vessel (bottom). Engineering unit: mm (in)

For detailed information on calibration tools, see BA01309C

Communication and data processing

Communication with the transmitter

Always connect digital sensors with Memosens technology to a transmitter with Memosens technology. Data transmission to a transmitter for analog sensors is not possible.

Digital sensors can store measuring system data in the sensor. These include the following:
- Manufacturer data
  - Serial number
  - Order code
  - Date of manufacture
- Calibration data
  - Calibration date
  - Number of calibrations
  - Serial number of the transmitter used to perform the last calibration or adjustment
- Operating data
  - Temperature application range
  - Date of initial commissioning

Dependability

Ease of maintenance

Easy handling
Sensors with Memosens technology have integrated electronics that store calibration data and other information (e.g. total hours of operation or hours of operating under extreme measuring conditions). Once the sensor has been connected, the sensor data are transferred automatically to the transmitter and used to calculate the current measured value. As the calibration data are stored in the sensor, the sensor can be calibrated and adjusted independently of the measuring point. The result:
- Easy calibration in the measuring lab under optimum external conditions increases the quality of the calibration.
- Precalibrated sensors can be replaced quickly and easily, resulting in a noticeable increase in the availability of the measuring point.
- Thanks to the availability of the sensor data, maintenance intervals can be accurately defined and predictive maintenance is possible.
- The sensor history can be documented on external data carriers and evaluation programs.
- Thus, the current application of the sensor can be determined depending on its previous history.

Input

Measured variable

- Turbidity
- Temperature
- Solids content

Measuring range

CUS52D		Application
Turbidity	0.000 to 4 000 FNU Display range up to 9999 FNU	Formazine
Solids	0 to 1 500 mg/l Display range up to 3 g/l	Kaolin
	0 to 2 200 mg/l Display range up to 10 g/l	Diatomite
Temperature	−20 to 85 °C (−4 to 185 °F)	

Power supply

Electrical connection

The following connection options are available:
- Via M12 plug (version: fixed cable, M12 plug)
- Via sensor cable to the plug-in terminals of a sensor input on the transmitter (version: fixed cable, end sleeves)

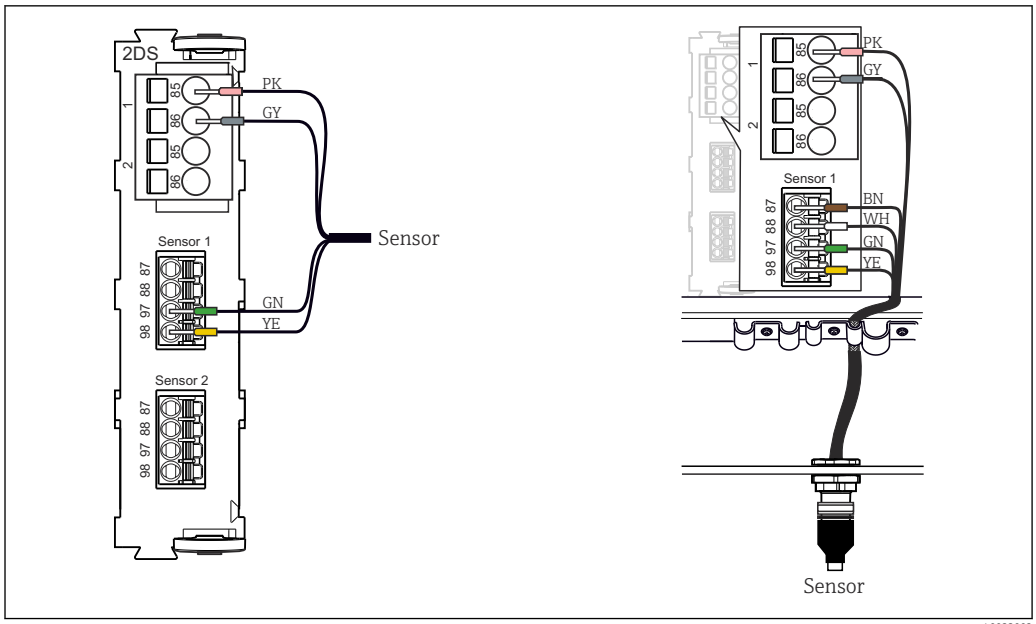

7 Sensor connection to sensor input (left) or via M12 plug (right)

The maximum cable length is 100 m (328.1 ft).

Performance characteristics

Reference operating conditions

20 °C (68 °F), 1013 hPa (15 psi)

Maximum measurement error

Turbidity	2 % of the measured value or 0.01 FNU (the greater value applies in each case). Reference: Measured value in specified measuring range of 0 to 1000 FNU, factory calibration
Solids	< 5% of measured value or 1 % of the end of measuring range (the greater value applies in each case). Applies for sensors that are calibrated to the particular measuring range under analysis.

The measured error encompasses all inaccuracies of the measuring chain (sensor and transmitter). However, it does not include the inaccuracy of the reference material used for calibration.

For solids, the achievable measured errors depend very much on the media that are actually present and may differ from the specified values. Extremely inhomogeneous media cause the measured value to fluctuate and increase the measured error.

Repeatability

< 0.5 % of the measured value

Long-term reliability

Drift

Working on the basis of electronic controls, the sensor is largely free of drifts.

Response time

> 1 second, adjustable

Detection limit

Limit of detection in accordance with ISO 15839 in ultrapure water:

Application	Measuring range	Limit of detection
Formazine	0 to 10 FNU(ISO 15839)	0.0015 FNU

Installation

Orientation

Orientation in pipes

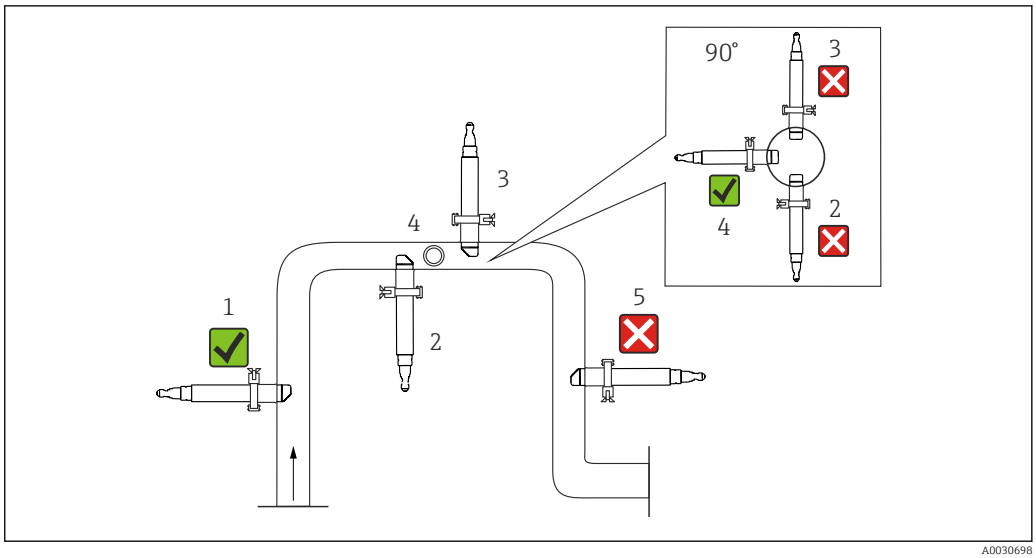

8 *Permitted and unacceptable orientations in pipes*

- Install the sensor in places with consistent flow conditions.
- The best installation location is in the ascending pipe (item 1). Installation in the horizontal pipe (item 4) is also possible.
- Do not install the sensor in places where air spaces or bubbles occur (item 3) or where sedimentation may occur (item 2).
- Avoid installation in the down pipe (item 5).
- Avoid fittings downstream from pressure reduction stages which can lead to outgassing.

Wall effects

Backscattering on the pipe wall may result in the distortion of measured values in the case of turbidity values < 200 FNU. Therefore a pipeline diameter of at least 100 mm (3.9 in) is recommended for reflecting materials (e.g. stainless steel). An assembly adjustment onsite is also recommended.

Pipes made of stainless steel with diameter >DN 300 exhibit hardly any wall effects.

Black plastic pipes with diameter > DN 60 exhibit hardly any wall effects (<0.05 FNU). For this reason, the use of black plastic pipes is recommended.

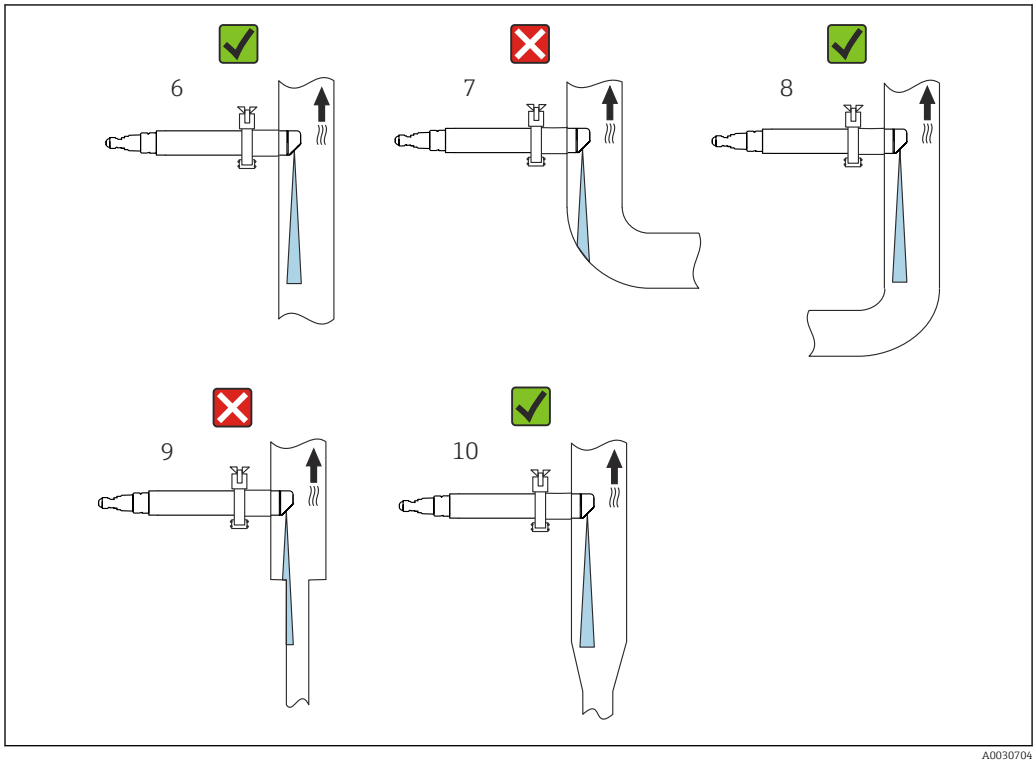

9 *Orientations for pipes and assemblies*

- Install the sensor in such a way that the light beam is not reflected → 9, 10 (item 6).
- Avoid sudden changes in cross-section (item 9). Changes in cross-section should be gradual and located as far away as possible from the sensor (item 10).
- Do not install the sensor directly downstream from a bend (item 7). Instead position it as far away as possible from the bend (item 8).

Installation marking

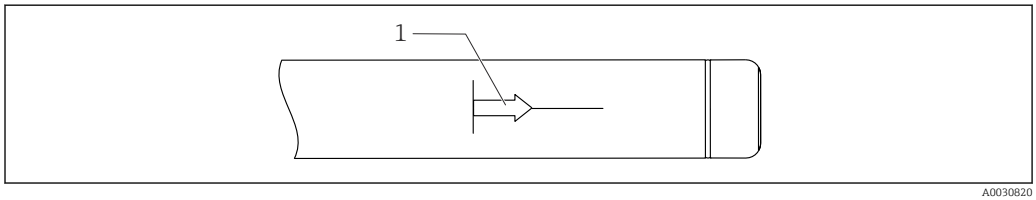

10 *Installation marking for sensor alignment*

1 Installation marking

The installation marking on the sensor is aligned opposite the optical system.

- Align the sensor against the flow direction.

Installation options

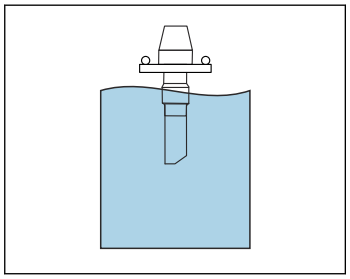

11 CLA140 immersion assembly

No special installation angle required.
No flow.
If the sensor is used in open basins, install the sensor in such a way that air bubbles cannot accumulate on it.

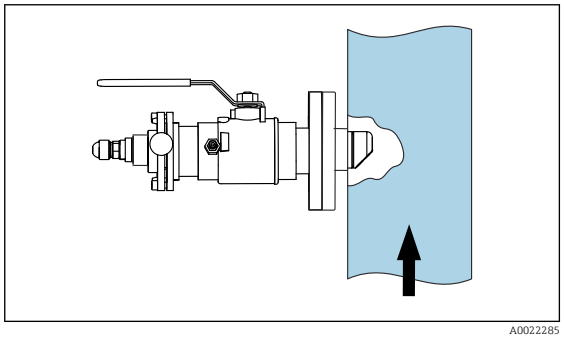

12 Installing with CUA451 retractable assembly

The installation angle is 90°.
The arrow points in the direction of flow.
The optical windows in the sensor must be aligned against the direction of flow.
The medium pressure may not exceed 2 bar (29 psi) for manual assembly retraction.

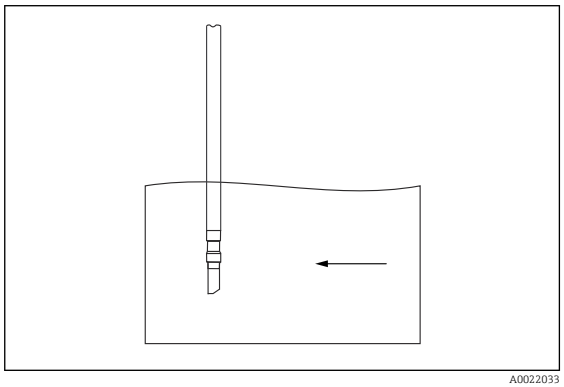

13 Installing with immersion assembly

The installation angle is 0°.
The arrow points in the direction of flow.

- If the sensor is being used in open basins, install the sensor in such a way that air bubbles cannot accumulate on it.

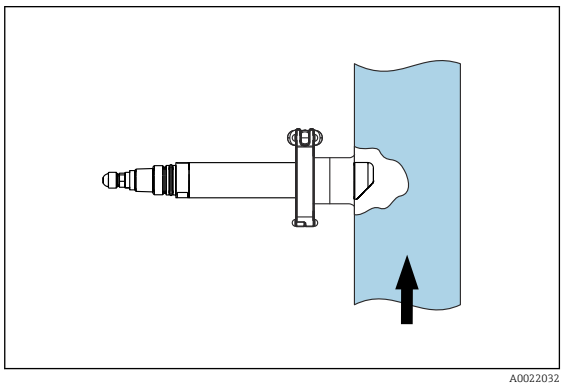

14 Installing with 2" clamp connection

The installation angle is 90°.
The arrow points in the direction of flow.
The optical windows in the sensor must be aligned against the direction of flow.
A weld-in adapter is available as an accessory for the installation → 11.

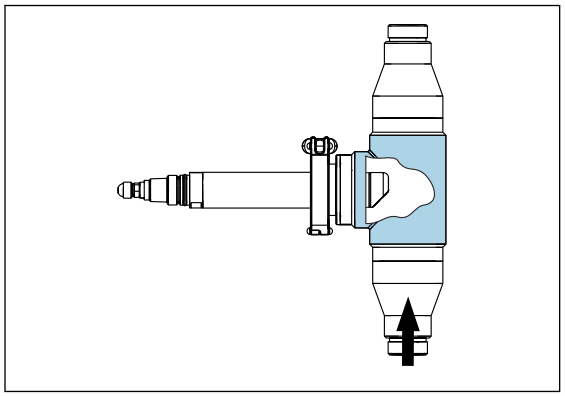

15 *Installing with CUA252 flow assembly*

The installation angle is 90°.
The arrow points in the direction of flow.
The optical windows in the sensor must be aligned against the direction of flow.

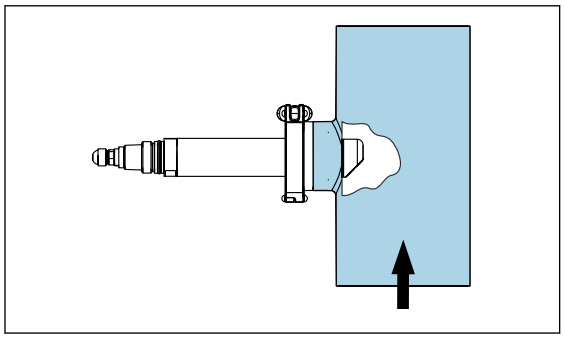

16 *Installing with CUA262 flow assembly*

The installation angle is 90°.
The arrow points in the direction of flow.
The optical windows in the sensor must be aligned against the direction of flow.

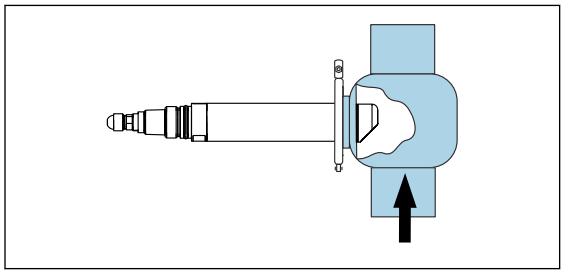

17 *Installing with standard Varivent connection*

The installation angle is 90°.
The arrow points in the direction of flow.
The optical windows in the sensor must be aligned against the direction of flow.

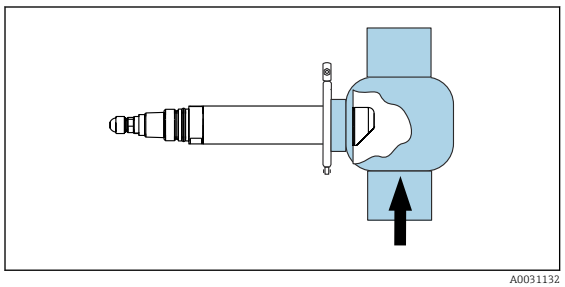

18 *Installing with Varivent connection with extended shaft*

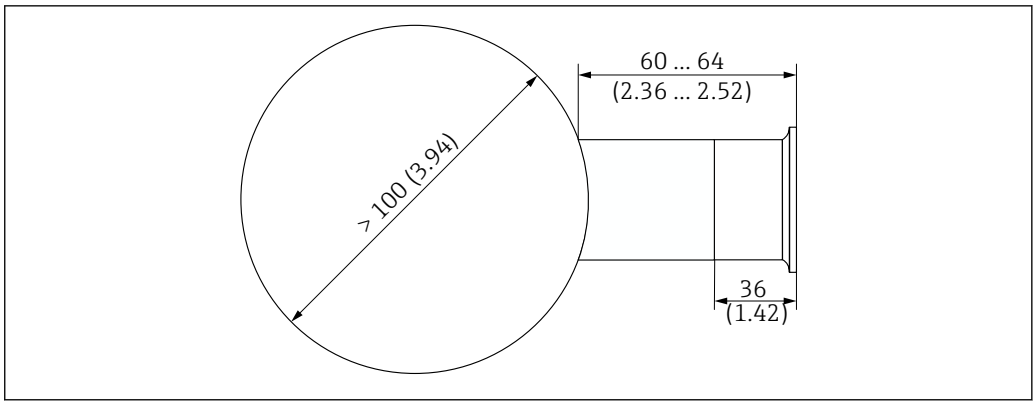

19 *Pipe connection with weld-in adapter. Dimensions: mm (in)*

For automatic sensor operation in pipe fittings or flow assemblies, there is the option of using the ultrasonic cleaning system CYR52 (→ 22).

Bubbles result in errors in turbidity measurements. The effect of this interference can be minimized by using a bubble trap (→ 22).

Environment

Ambient temperature range

−20 to 60 °C (−4 to 140 °F)

Storage temperature

−20 to 70 °C (−4 to 158 °F)

Degree of protection

- IP 68 (1.83 m (6 ft) water column over 24 hours)
- IP 66
- Type 6P

Process

Process temperature range

Stainless steel sensor

−20 to 85 °C (−4 to 185 °F)

Plastic sensor

−20 to 60 °C (−4 to 140 °F)

Under high temperatures combined with extremely high or low pH values and chemical boundary conditions, e.g. during CIP cleaning processes, the sensor has limited long-term stability.

To avoid damage to the sensor, only use the sensor in combination with a retractable assembly in CIP cleaning processes. The retractable assembly allows the sensor to be removed from the process during cleaning.

Process pressure range

Stainless steel sensor

0.5 to 10 bar (7.3 to 145 psi) absolute

Plastic sensor

0.5 to 6 bar (7.3 to 87 psi) absolute

Flow limit

Minimum flow

No minimum flow required.

For solids which have a tendency to form deposits, ensure that sufficient mixing is performed.

Mechanical construction

Dimensions

Plastic sensor

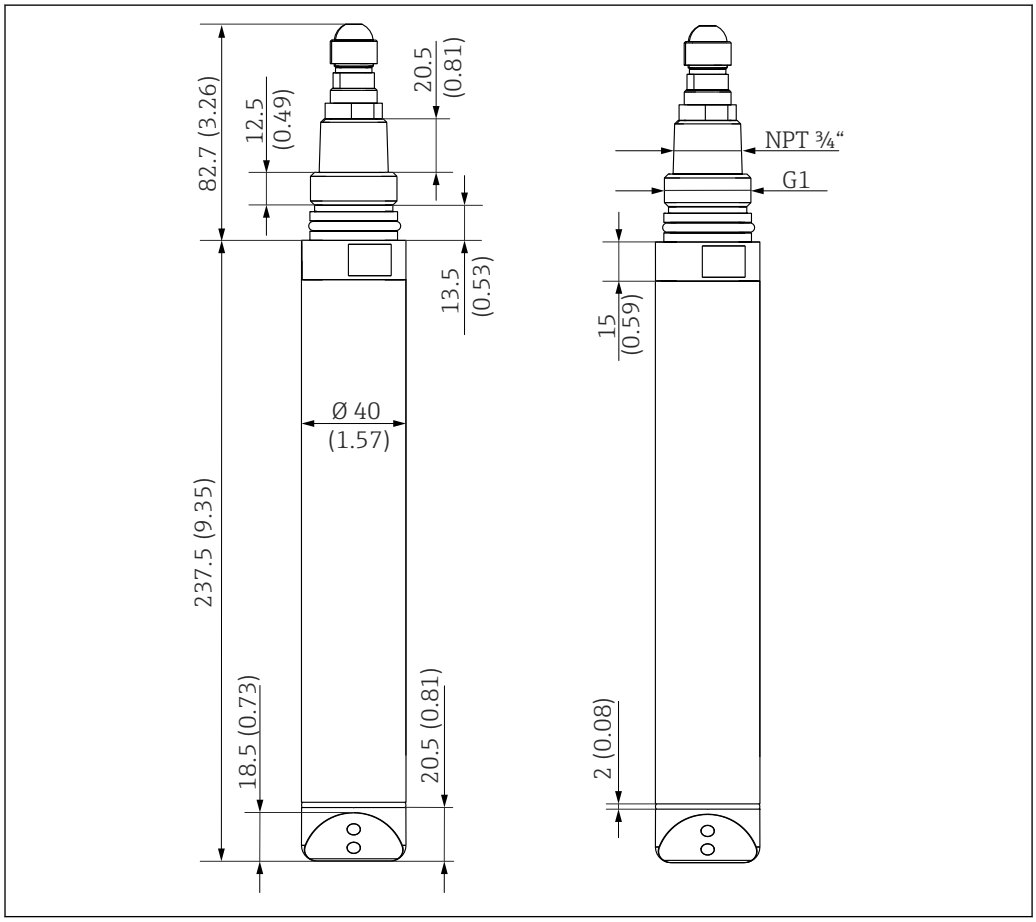

20 Dimensions of plastic sensor. Dimensions: mm (in)

Stainless steel sensor

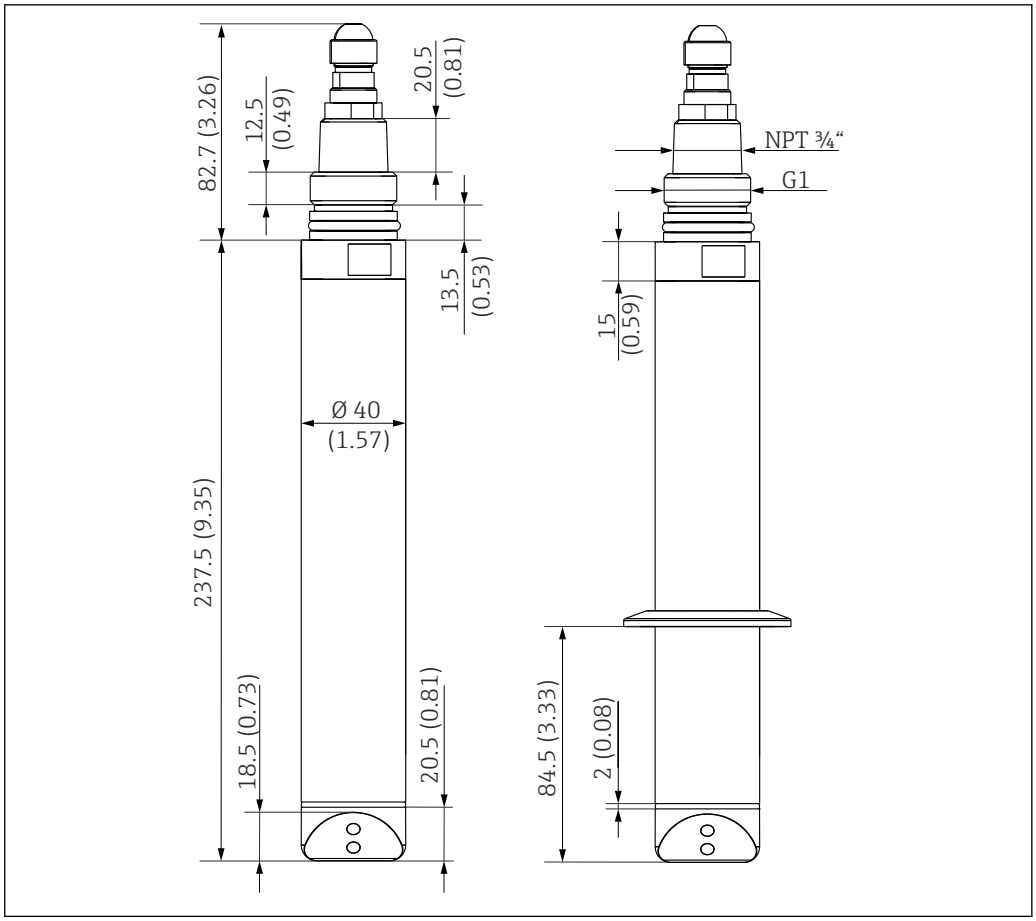

21 Dimensions of stainless steel sensor and stainless steel sensor with clamp connection (right). Dimensions: mm (in)

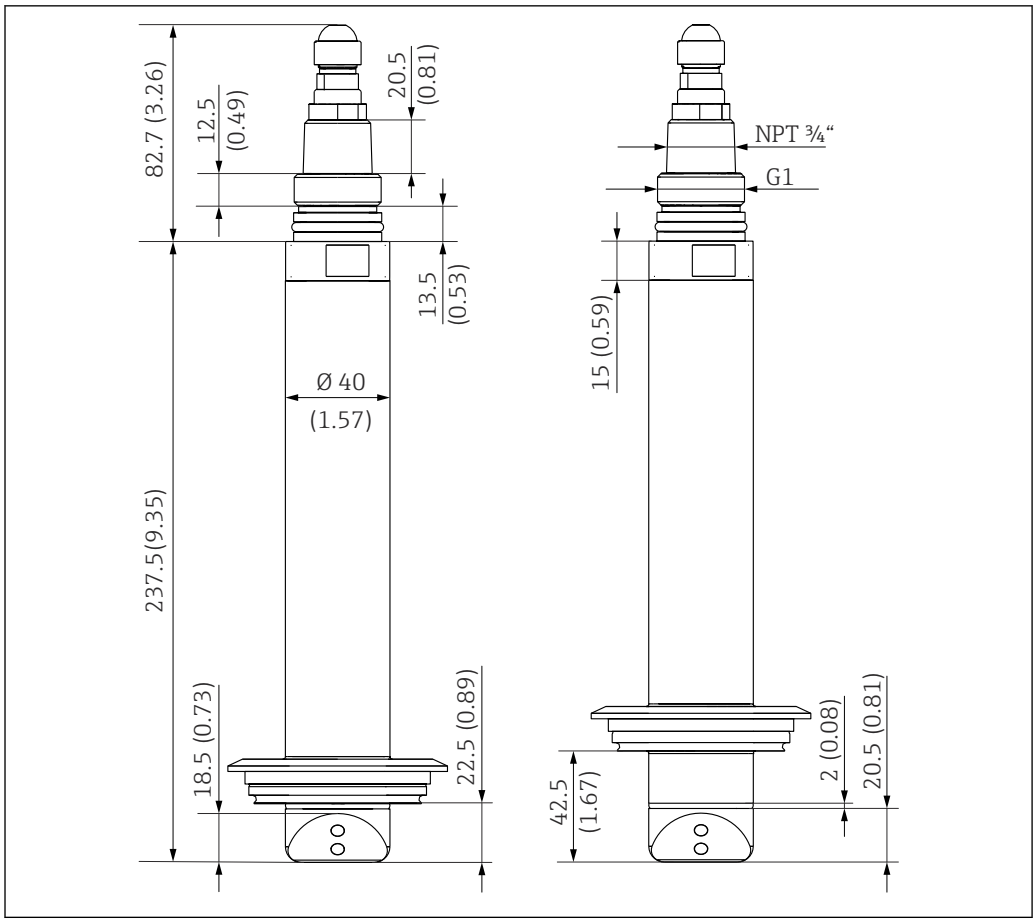

22 *Dimensions of stainless steel sensor with standard Varivent connection (left) and extended shaft (right). Dimensions: mm (in)*

Compressed air cleaning

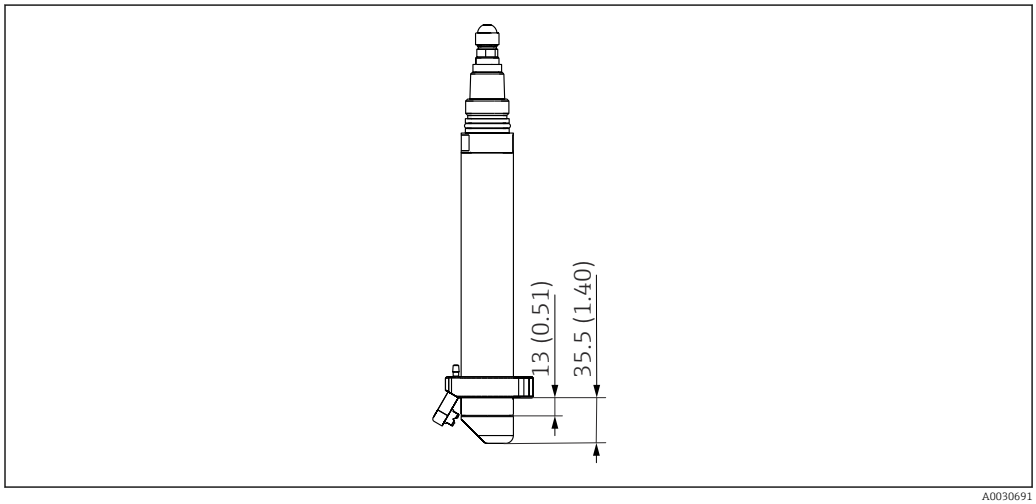

23 *Dimensions of sensor with compressed air cleaning. Dimensions: mm (in)*

Compressed air cleaning accessory → 20

Solid state reference

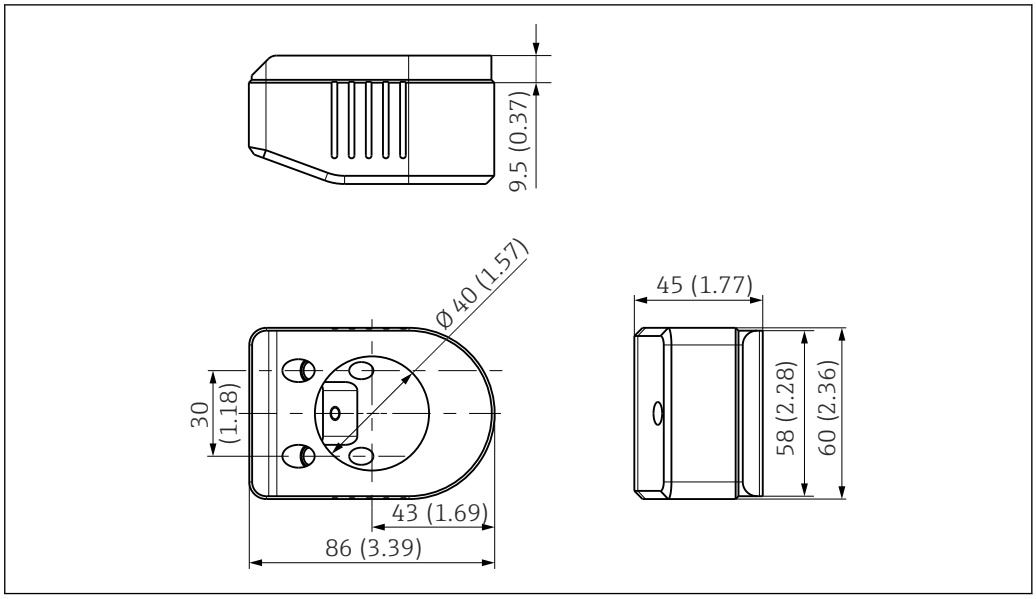

24 Calkit CUS52D solid state reference. Unit: mm (in)

Weight

Plastic sensor

Plastic sensor: 0.72 kg (1.58 lb)

The specifications apply to the sensor with a 7 m (22.9 ft) cable.

Stainless steel sensor

With clamp	1.54 kg (3.39 lb)
Without clamp	1.48 kg (3.26 lb)
With Varivent connection, standard	1.84 kg (4.07 lb)
With Varivent connection, extended shaft	1.83 kg (4.04 lb)

The specifications apply to the sensor with a 7 m (22.9 ft) cable.

Materials

	Plastic sensor	Stainless steel sensor
Sensor head:	PEEK GF30	Stainless steel 1.4404 (AISI 316 L)
Sensor housing:	PPS GF40	Stainless steel 1.4404 (AISI 316 L)
O-rings:	EPDM	EPDM
Optical windows:	Sapphire	Sapphire
Window adhesive:	Epoxy resin	Epoxy resin
Cable-end fitting:	Stainless steel 1.4404 (AISI 316 L)	Stainless steel 1.4404 (AISI 316 L)

Process connections

Plastic and stainless steel sensor

G1 and NPT ¾'

Stainless steel sensor

- Clamp 2" (depending on sensor version)/DIN 32676
- Varivent N DN 65 - 125 standard immersion depth 22.5 mm
- Varivent N DN 65 - 125 immersion depth 42.5 mm

Certificates and approvals

Current certificates and approvals for the product are available at www.endress.com on the relevant product page:

1. Select the product using the filters and search field.
2. Open the product page.
3. Select **Downloads**.

Ex-approval

ATEX
Ex II 3G Ex ec op is IIC T4 Gc

IECEx
Ex ec op is IIC T4 Gc

NAMUR

NE 21

Device safety

- EN IEC 61010-1
- CAN/US General Purpose

ISO 7027

The measurement method used in the sensor corresponds to the nephelometric turbidity method according to ISO 7027-1.

Marine certifications

The product has certificates for marine applications, issued by the following classification societies: ABS (American Bureau of Shipping), BV (Bureau Veritas), DNV (Det Norske Veritas) and LR (Lloyd's Register).

Additional certification

The following tests, certificates and declarations are available for the product depending on the order version selected:
Suitable for drinking water in accordance with UBA assessment basis, declaration

Ordering information

Scope of delivery

The scope of delivery comprises:
- 1 sensor, version as ordered
- 1 Operating Instructions BA01275C

Product page

Product Configurator

1. **Configure**: Click this button on the product page.
2. Select **Extended selection**.
   ↳ The Configurator opens in a separate window.
3. Configure the device according to your requirements by selecting the desired option for each feature.
   ↳ In this way, you receive a valid and complete order code for the device.
4. **Accept**: Add the configured product to the shopping cart.

For many products, you also have the option of downloading CAD or 2D drawings of the selected product version.

5. **CAD**: Open this tab.
   ↳ The drawing window is displayed. You have a choice between different views. You can download these in selectable formats.

Accessories

The following are the most important accessories available at the time this documentation was issued.

Listed accessories are technically compatible with the product in the instructions.

1. Application-specific restrictions of the product combination are possible.
   Ensure conformity of the measuring point to the application. This is the responsibility of the operator of the measuring point.
2. Pay attention to the information in the instructions for all products, particularly the technical data.
3. For accessories not listed here, please contact your Service or Sales Center.

Assemblies

FlowFit CUA120
- Flange adapter for mounting turbidity sensors

Technical Information TI096C

Flowfit CUA252
- Flow assembly

Technical Information TI01139C

Flowfit CUA262
- Weld-in flow assembly

Technical Information TI01152C

Flexdip CYA112
- Immersion assembly for water and wastewater
- Modular assembly system for sensors in open basins, channels and tanks
- Material: PVC or stainless steel

Technical Information TI00432C

Cleanfit CUA451
- Manual retractable assembly made of stainless steel with ball valve shut-off for turbidity sensors

Technical Information TI00369C

Flowfit CYA251
- Connection: See product structure
- Material: PVC-U

Technical Information TI00495C

Flowfit CUA250
- Flow assembly for water and wastewater applications

Technical Information TI00096C

Built-in adapter
- For installing CUS52D in CYA251 assembly
- Order number: 71248647

Dipfit CLA140
- Immersion assembly with flange connection for very demanding processes

Technical Information TI00196C

Holder

Flexdip CYH112
- Modular holder system for sensors and assemblies in open basins, channels and tanks
- For Flexdip CYA112 water and wastewater assemblies
- Can be affixed anywhere: on the ground, on the coping stone, on the wall or directly onto railings.
- Stainless steel version

Technical Information TI00430C

Mounting material

Weld-in adapter for clamp connection DN 50
- Material: 1.4404 (AISI 316 L)
- Wall thickness 1.5 mm (0.06 in)
- DIN 32676
- Order number: 71242201

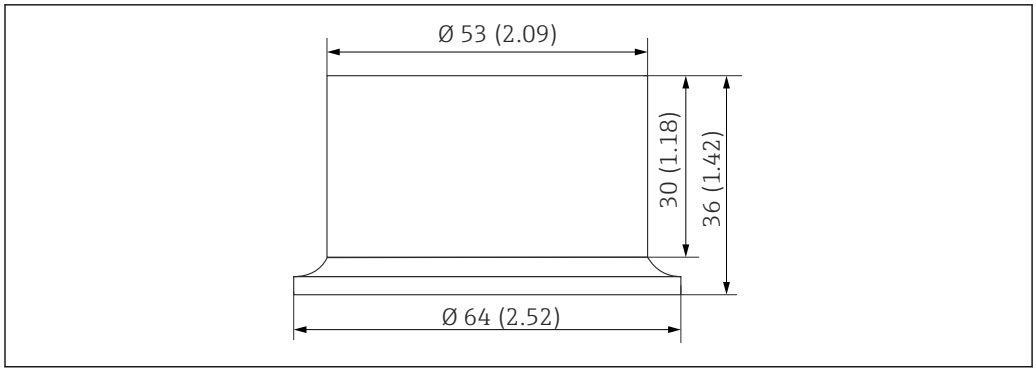

25 Weld-in adapter. Unit: mm (in)

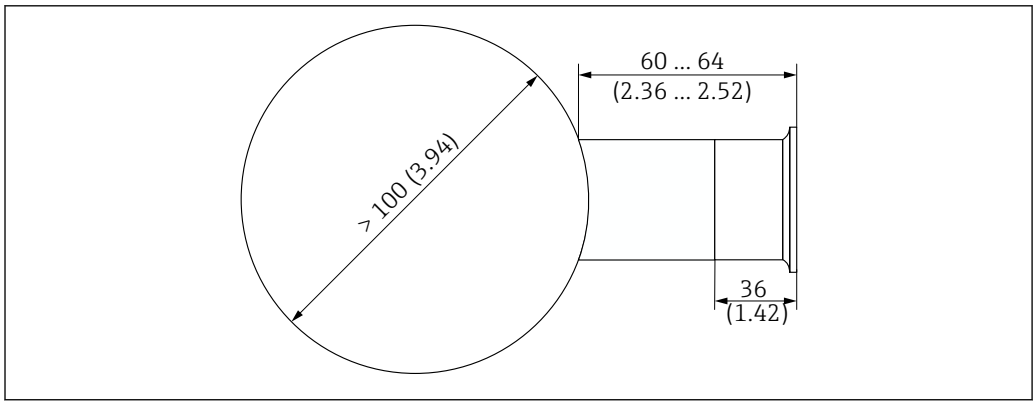

26 Pipe connection with weld-in adapter. Unit: mm (in)

Compressed air cleaning

Compressed air cleaning for stainless steel sensors
- Pressure 1.5 to 2 bar (21.8 to 29 psi)
- Connection: 6 mm (0.24 in) or 8 mm (0.31 in)
- Materials: POM black, stainless steel
- Order number: 71242026

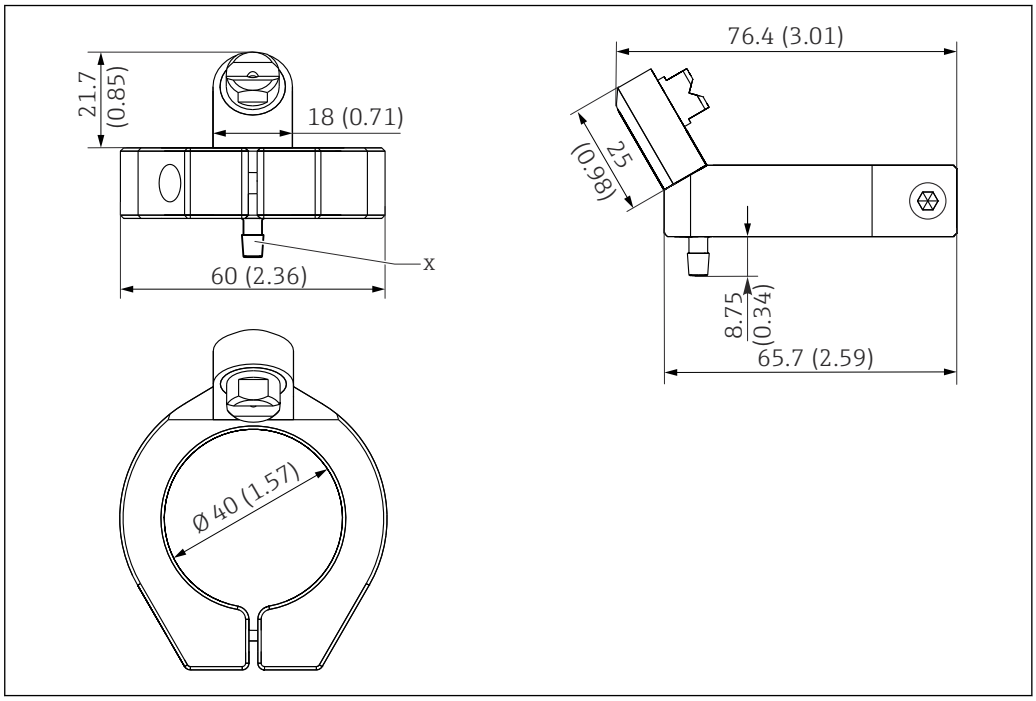

27 Compressed air cleaning for stainless steel sensors. Dimensions: mm (in)

X 6 mm (0.2 in) hose barb

Compressed air cleaning for plastic sensor
- Pressure 1.5 to 2 bar (21.8 to 29 psi)
- Connection: 6 mm (0.24 in) or 8 mm (0.31 in)
- Materials: PVDF, titanium
- Order number: 71478867

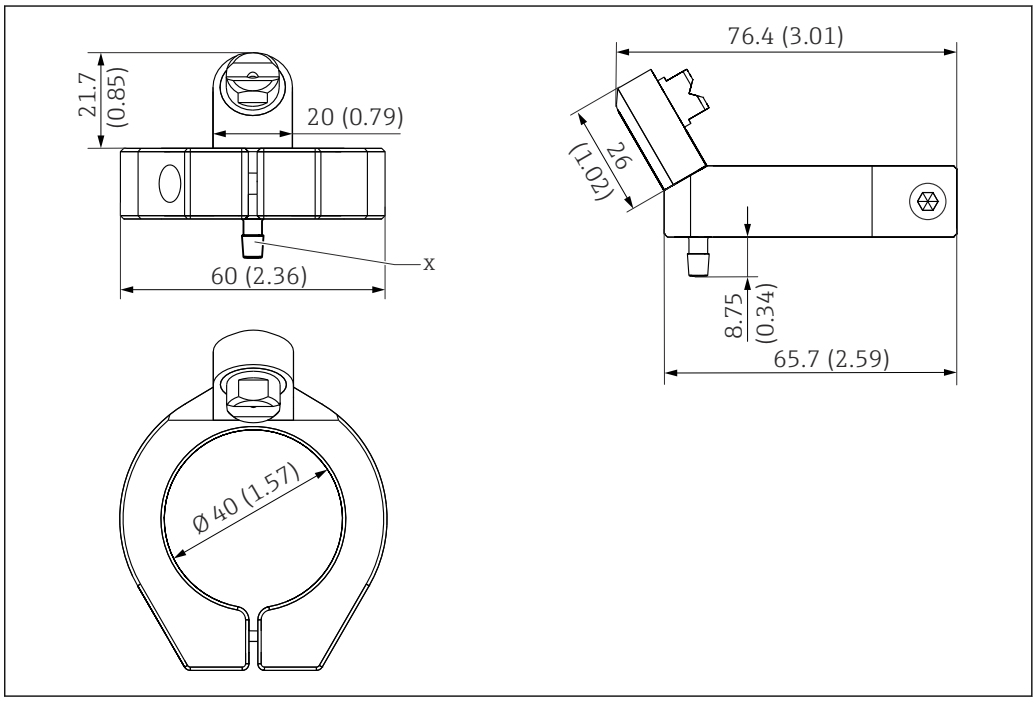

28 Compressed air cleaning for plastic sensor. Dimensions: mm (in)

X 6 mm (0.2 in) hose barb

Compressor
- For compressed air cleaning
- 115 V AC, order number: 71194623

Ultrasonic cleaning

Ultrasonic cleaning system CYR52
- For attachment to assemblies and pipes

Technical Information TI01153C

Mechanical cleaning

CYR51 mechanical cleaning
- Sensors immersed in liquid can be cleaned directly in the basin or vessel.
- The mechanical cleaning unit is clipped onto the sensor and secured.

Technical Information TI01821C

Bubble trap

Bubble trap
- For sensor CUS52D
- Process pressure: up to 3 bar (43.5 psi)
- Process temperature: 0 to 50 °C (32 to 122 °F)
- Material: Polycarbonate
- D 12 adapter with connection for degassing line (upper connection on the CUA252) is included in the scope of delivery.
- Orifice plates for the following volume flows:
  - < 60 l/h (15.8 gal/h)
  - 60 to 100 l/h (15.8 to 26.4 gal/h)
  - 100 l/h (26.4 gal/h)
- The degassing line is fitted with a PVC hose, backpressure hose valve and luer lock adapter.
- Order number, suitable for CUA252 assembly: 71242170

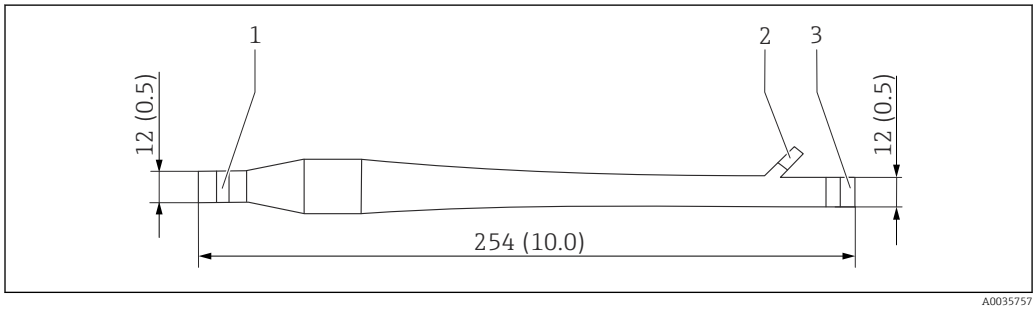

29 Bubble trap. Unit: mm (in)

1 Inlet for medium (without hose system)
2 Outlet for bubbles (hose system is included in scope of delivery)
3 Outlet for medium (without hose system)

Solid state reference

CUY52-AA+560
- Easy and safe verification with the solid state reference of CUS52D turbidity sensors.

Technical Information TI01154C

Calibration vessel

CUY52-AA+640
- Calibration vessel for CUS52D turbidity sensor
- Easy and reliable calibration of CUS52D turbidity sensors.

Technical Information TI01154C



Endress+Hauser

People for Process Automation

Consultas y ventas: AQUAREP · www.aquarep.com.ar · info@aquarep.com.ar · WhatsApp +54 9 11 6091-0087