TI01493C/07/EN/03.25-00
71721426
2025-09-22

Technical Information
Memosens CPS11E

pH sensor for standard applications in process technology and environmental engineering



Digital with Memosens 2.0 technology

Application

- Long-term monitoring and limit control in processes with stable process conditions
  - Chemical industry: strong acids/bases, plastic, pulp and paper industry
  - Power plants (e.g. flue gas cleaning), oil and gas
  - Incinerator plants
- Water and wastewater treatment
  - Boiler feedwater and cooling water
  - Well water and drinking water
  - All industrial and municipal treatment plants

Your benefits

- Low-maintenance and robust thanks to large PTFE ring junction
- Can be used at pressures up to 17 bar (246.5 psi) (absolute)
- Process glass for standard applications (application A)
- Process glass also for highly alkaline applications (application B)
- Process glass for applications in media containing hydrofluoric acid (application F)
- Integrated NTC 30K temperature sensor for effective temperature compensation
- Optional: for media with low conductivity (reference systems AS and TS with salt storage)
- Optional: poison-resistant reference with improved ion trap (reference systems TA and TS)
- Various optional approvals for use in hazardous areas

Other advantages of Memosens technology

- Maximum process safety with non-contact, inductive signal transmission
- Data security thanks to digital data transmission
- Very easy to use as sensor data saved in the sensor
- Recording of sensor load data in the sensor enables predictive maintenance

Endress+Hauser
People for Process Automation

Consultas y ventas: AQUAREP · www.aquarep.com.ar · info@aquarep.com.ar · WhatsApp +54 9 11 6091-0087

Function and system design

Measuring principle

pH measurement

The pH value is used as a unit of measurement for the acidity or alkalinity of a medium. The membrane glass of the sensor supplies an electrochemical potential depending on the pH value of the medium. This potential is generated by the selective accumulation of H^+ ions on the outer layer of the membrane. As a result, an electrochemical boundary layer with an electrical potential difference forms at this point. An integrated Ag/AgCl reference system serves as the required reference electrode.

The measured voltage is converted to the corresponding pH value using the Nernst equation.

Measuring system

A complete measuring system consists of the following components at least:

- pH sensor CPS11E
- Transmitter, e. g. Liquiline CM42, CM44x
- Memosens data cable CYK10 or CYK20
- Assembly
  - Immersion assembly, e. g. Dipfit CPA111
  - Flow assembly, e. g. Flowfit CPA250
  - Retractable assembly, e. g. Cleanfit CPA871
  - Permanent installation assembly, e. g. Unifit CPA842

Additional options are available depending on the application:
Automatic cleaning and calibration system, e. g. Liquiline Control CDC90

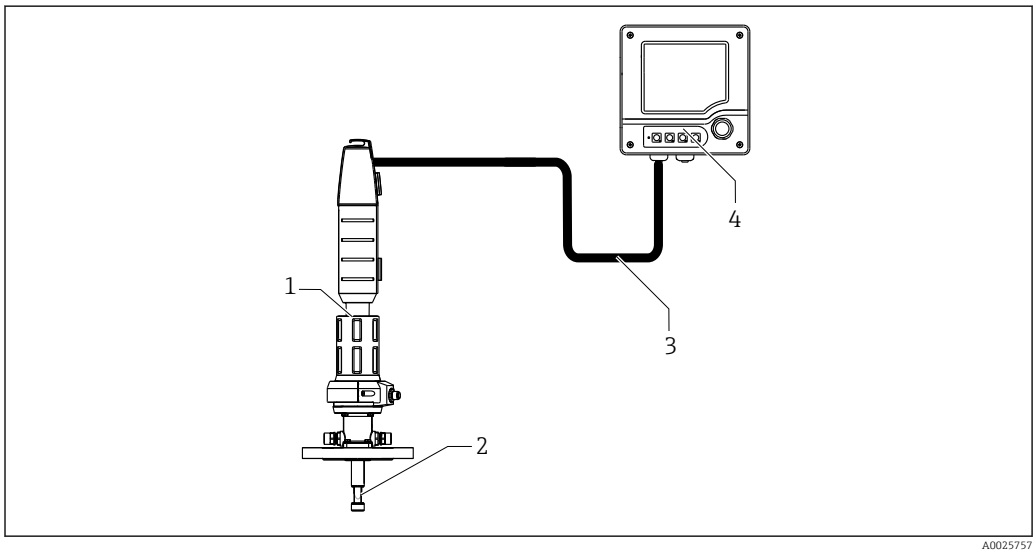

1 Example of a measuring system for pH measurement

1 *Retractable assembly Cleanfit CPA871*
2 *pH sensor CPS11E*
3 *Memosens data cable CYK10*
4 *Liquiline M CM42 two-wire transmitter for hazardous areas*

Communication and data processing

Communication with the transmitter

Always connect digital sensors with Memosens technology to a transmitter with Memosens technology. Data transmission to a transmitter for analog sensors is not possible.

Digital sensors can store measuring system data in the sensor. These include the following:
- Manufacturer data
  - Serial number
  - Order code
  - Date of manufacture
- Calibration data
  - Calibration date
  - Slope at 25 °C (77 °F)
  - Zero point at 25 °C (77 °F)
  - Offset of integrated temperature sensor
  - Number of calibrations
  - Calibration history
  - Serial number of the transmitter used to perform the last calibration or adjustment
- Operating data
  - Temperature application range
  - pH application range
  - Date of initial commissioning
  - Maximum temperature value
  - Hours of operation under extreme conditions
  - Number of sterilizations
  - CIP counter
  - Sensor load

The data listed above can be displayed with Liquiline CM42, CM44x, and Memobase Plus CYZ71D.

Dependability

Reliability

Easy handling

Sensors with Memosens technology have integrated electronics that store calibration data and other information (e.g. total hours of operation or operating hours under extreme measuring conditions). Once the sensor has been connected, the sensor data are transferred automatically to the transmitter and used to calculate the current measured value. As the calibration data are stored in the sensor, the sensor can be calibrated and adjusted independently of the measuring point. The result:
- Easy calibration in the measuring lab under optimum external conditions increases the quality of the calibration.
- Pre-calibrated sensors can be replaced quickly and easily, resulting in a dramatic increase in the availability of the measuring point.
- Thanks to the availability of the sensor data, maintenance intervals can be accurately defined and predictive maintenance is possible.
- The sensor history can be documented on external data carriers and evaluation programs, e.g. Memobase Plus CYZ71D,.
- The saved application data of the sensor can be used to determine the continued use of the sensor in a targeted manner.

Interference immunity

Data security thanks to digital data transmission

Memosens technology digitizes the measured values in the sensor and transmits the data to the transmitter via a non-contact connection that is free from potential interference. The result:
- If the sensor fails or there is an interruption in the connection between the sensor and transmitter, this is reliably detected and reported.
- The availability of the measuring point is reliably detected and reported.

Safety

Maximum process safety
With inductive transmission of the measured value using a non-contact connection, Memosens guarantees maximum process safety and offers the following benefits:
- All problems caused by moisture are eliminated:
  - No corrosion at the connection
  - Measured values cannot be distorted by moisture
- The transmitter is galvanically decoupled from the medium. Issues concerning "symmetrical high-impedance" or "asymmetry" or the type of impedance converter are a thing of the past.
- Electromagnetic compatibility (EMC) is guaranteed by screening measures for the digital transmission of measured values.
- Intrinsically safe electronics mean operation in hazardous areas is not a problem. Complete flexibility thanks to individual Ex approvals for all components, such as sensors, cables and transmitters.

Input

Measured variable

pH value

Temperature

Measuring range

Application A
- pH: 1 to 12
- Temperature: –15 to 80 °C (5 to 176 °F)

Application B
- pH: 0 to 14
- Temperature: 0 to 135 °C (32 to 275 °F)

Application F
- pH: 0 to 10
- Temperature: 0 to 70 °C (32 to 158 °F)

Pay attention to the operating conditions in the process.

Power supply

Electrical connection

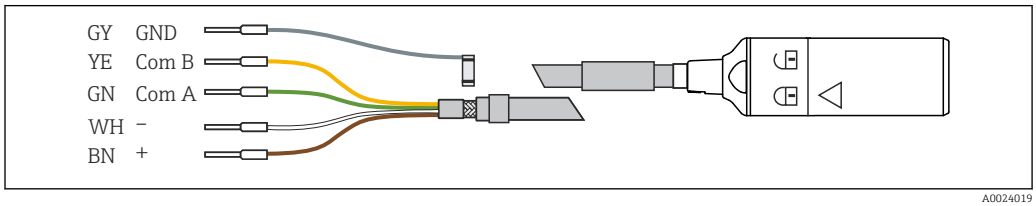

2 Measuring cable CYK10 or CYK20

► Connect the Memosens measuring cable, e.g. CYK10 or CYK20, to the sensor.

For further information on cable CYK10, see BA00118C.

Performance characteristics

Reference system

- AA: PTFE reference junction, bridging electrolyte: 3M KCl, Ag/AgCl lead
- AS: PTFE reference junction, bridging electrolyte: saturated KCl, Ag/AgCl lead
- TA: PTFE reference junction, Ag±-free, ion trap, bridging electrolyte: 3M KCl, Ag/AgCl lead
- TS: PTFE reference junction, Ag±-free, ion trap, bridging electrolyte: saturated KCl, Ag/AgCl lead
  Reference system TS may display incorrect measured values in the event of rapid temperature changes such as those during CIP and autoclaving. We recommend use of the sensor for applications with temperatures that are as constant as possible.

Installation

Orientation

- Do not install the sensors upside-down.
- The installation angle from the horizontal must be at least 15°.

An installation angle <15° is not permitted, as otherwise an air bubble will form. Contact between the membrane glass and the reference lead will then no longer be guaranteed.

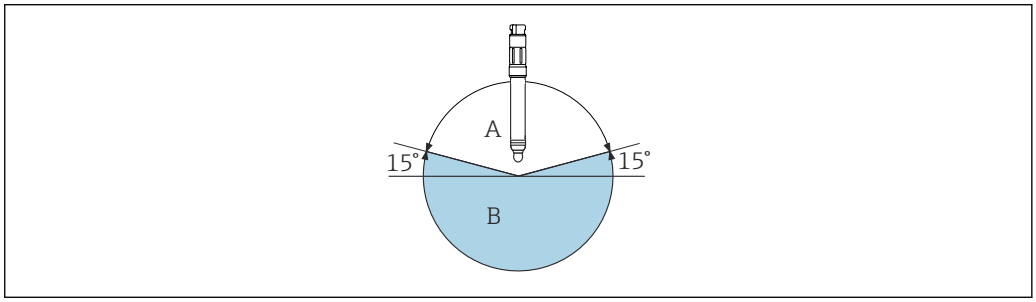

3 Installation angle at least 15° from the horizontal

A Permitted orientation
B Forbidden orientation

Installation instructions

Follow the Operating Instructions for the assembly used for detailed information on installing the assembly.

For detailed information on removing the wetting cap, see BA01988C

1. Before screwing in the sensor, make sure the assembly thread, the O-rings and the sealing surface are clean and undamaged and that the thread runs smoothly.
2. Hand-tighten the sensor with a torque of 3 Nm (2.21 lbf ft) (Only applies when installing in Endress+Hauser assemblies).

Environment

Ambient temperature range

NOTICE

Risk of damage from frost!

▶ Do not use the sensor at temperatures below −15 °C (5 °F) .

Storage temperature

0 to 50 °C (32 to 122 °F)

Degree of protection

IP 68 (10 m (33 ft) water column, 25 °C (77 °F), 45 days, 1 M KCl)

Electromagnetic compatibility (EMC)

Interference emission and interference immunity as per EN 61326-1: 2013

Process

Process temperature range

Application A:	−15 to 80 °C (5 to 176 °F)
Application B:	0 to 135 °C (32 to 275 °F)
Application F:	0 to 70 °C (32 to 158 °F)

Process pressure range

⚠ CAUTION

Pressurization of sensor due to prolonged use under increased process pressure

Possibility of sudden rupture and injury from glass splinters!

- ► Avoid fast heating of these pressurized sensors if they are used under reduced process pressure or under atmospheric pressure.
- ► When handling these sensors, always wear protective goggles and appropriate protective gloves.

Applications A and B:	0.8 to 17 bar (11.6 to 246.5 psi) absolute
Application F:	0.8 to 7 bar (11.6 to 101.5 psi) absolute

Conductivity

Reference system AA, TA:	minimum 50 µS/cm (minimized flow; pressure and temperature must remain constant)
Reference system AS, TS:	minimum 0.1 µS/cm (stainless steel flow assembly with grounding; stable and minimized flow; pressure and temperature must be stable)

Pressure/temperature ratings

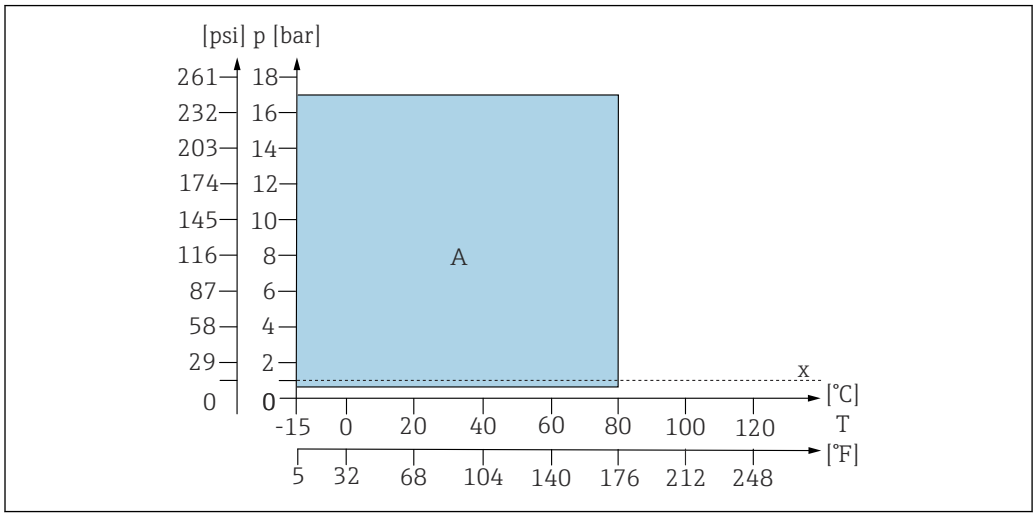

4 *Pressure/temperature chart*

A *Application A*
x *Atmospheric pressure*

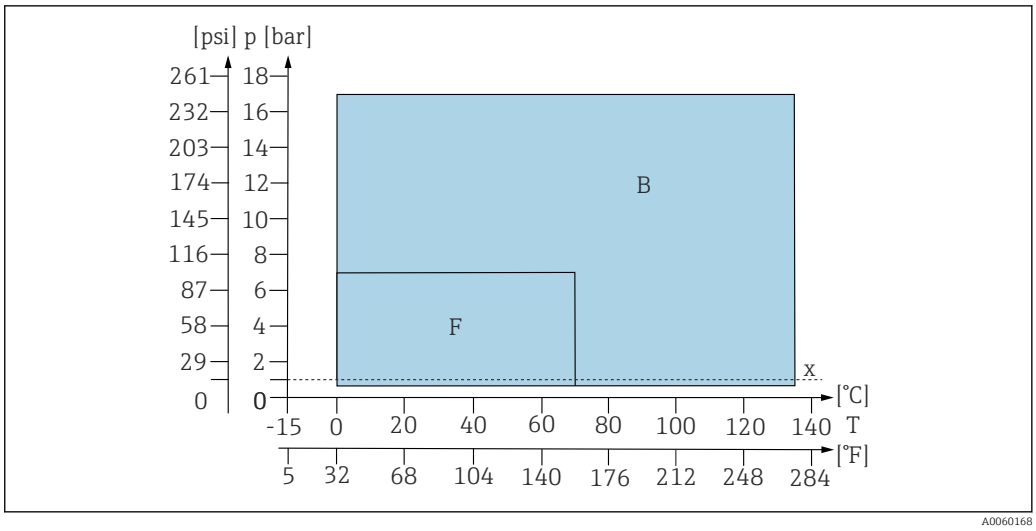

5 Pressure/temperature chart

B Application B
F Application F
x Atmospheric pressure

Mechanical construction

Design, dimensions

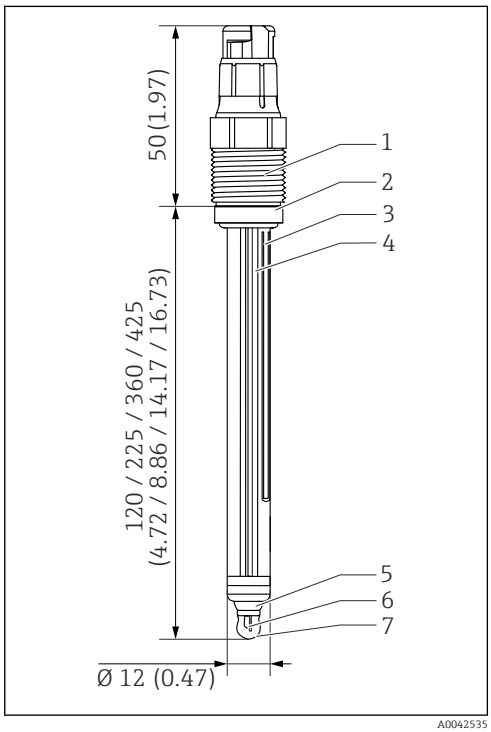

6 CPS11E without salt storage (reference system AA). Unit: mm (in)

1 Memosens plug-in head with process connection
2 O-ring with thrust collar
3 Reference lead
4 pH reference lead
5 Junction
6 Temperature sensor
7 pH glass membrane

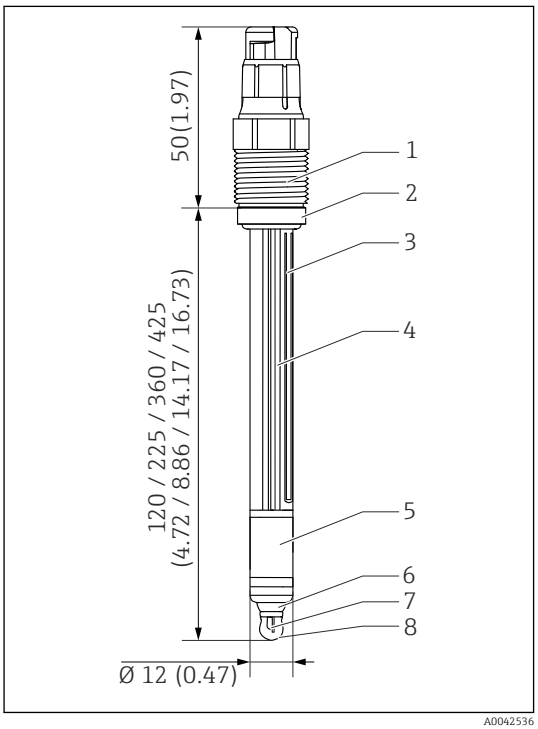

7 CPS11E with ion trap (reference system TA). Unit: mm (in)

1 Memosens plug-in head with process connection
2 O-ring with thrust collar
3 Reference lead
4 pH reference lead
5 Ion trap
6 Junction
7 Temperature sensor
8 pH glass membrane

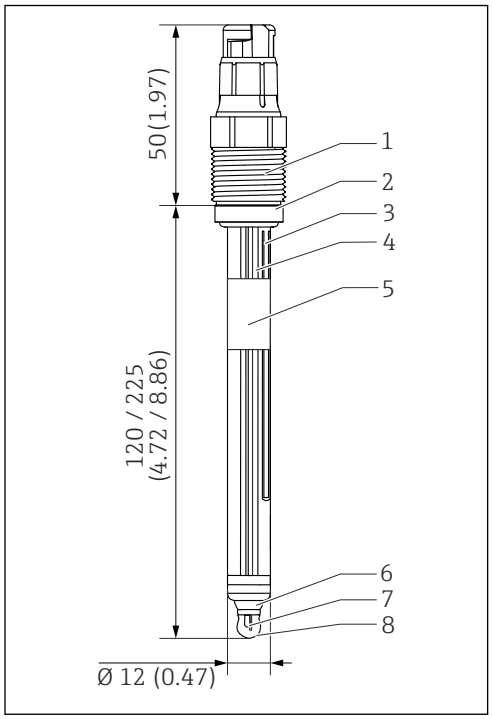

8 CPS11E with salt storage (reference system AS). Unit: mm (in)

1 *Memosens plug-in head with process connection*
2 *O-ring with thrust collar*
3 *Reference lead*
4 *pH reference lead*
5 *Salt storage*
6 *Junction*
7 *Temperature sensor*
8 *pH glass membrane*

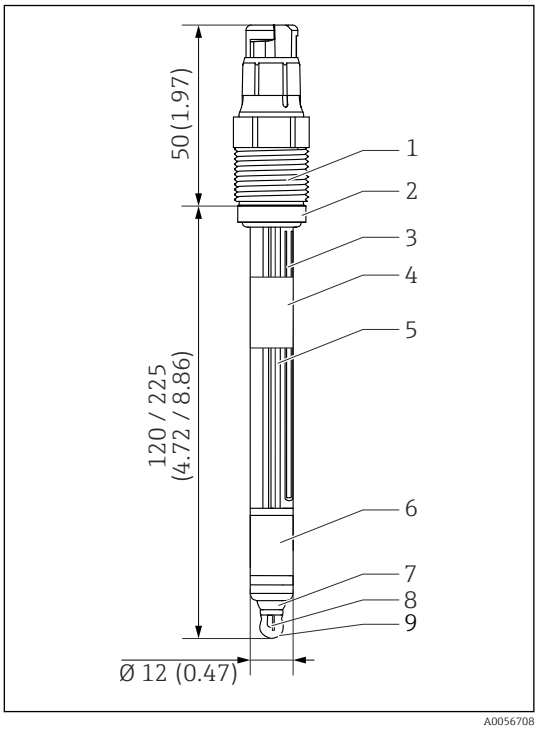

9 CPS11E with ion trap and salt storage (reference system TS). Unit: mm (in)

1 *Memosens plug-in head with process connection*
2 *O-ring with thrust collar*
3 *Reference lead*
4 *Salt storage*
5 *pH reference lead*
6 *Ion trap*
7 *Junction*
8 *Temperature sensor*
9 *pH glass membrane*

Weight

Installed length	120 mm (4.72 in)	225 mm (8.86 in)	360 mm (14.17 in)	425 mm (16.73 in)
Weight	40 g (1.4 oz)	60 g (2.1 oz)	90 g (3.2 oz)	100 g (3.5 oz)

Materials

Sensor shaft	Glass to suit process
pH membrane glass	Type A, B, F
Metal lead	Ag/AgCl
Open aperture	Ring-shaped PTFE junction, sterilizable
O-ring	FKM
Process coupling	PPS fiber-glass reinforced
Nameplate	Ceramic metal oxide

Yellowish milky discoloration in the electrolyte of the sensor does not affect the measurement performance and quality of the sensor.

Temperature sensor

NTC 30K

Plug-in head

Memosens plug-in head for digital, non-contact data transmission, pressure resistance 16 bar (232 psi) (relative)

Process connections

Pg 13.5

Certificates and approvals

Current certificates and approvals for the product are available at www.endress.com on the relevant product page:

1. Select the product using the filters and search field.
2. Open the product page.
3. Select **Downloads**.

Ex certification

ATEX
II 1G Ex ia IIC T3/T4/T6 Ga

IECEx
Ex ia IIC T3/T4/T6 Ga

NEPSI
Ex ia IIC T3/T4/T6 Ga

CSA C/US
- IS Cl. I Div 1, GP A, B, C, D Ex ia IIC T3/T4/T6
- IS Cl. I Zone 0, AEx ia IIC T3/T4/T6

Japan Ex
Ex ia IIC T3/T4/T6 Ga

INMETRO
Ex ia IIC T3/T4/T6 Ga

Korea Ex
Ex ia IIC T3/T4/T6 Ga

EAC Ex
Ex 0Ex ia IIC T3/T4/T6 Ga X

UKCA Ex
II 1G Ex ia IIC T3/T4/T6 Ga

Hazardous area versions of the digital sensors with Memosens technology are indicated by a red/orange ring on the plug-in head.

Pay attention to the instructions for Memosens data cable CYK10 and transmitter CM72CM82.

Additional certifications and declarations

The following test certificates, attestations and declarations (e.g. certificates of conformity) are available for the product depending on the selected version:
Pressure CRN

Marine certifications

The product has certificates for marine applications, issued by the following classification societies: ABS (American Bureau of Shipping), BV (Bureau Veritas), DNV (Det Norske Veritas) and LR (Lloyd's Register).

Drinking Water Directive (EU) 2020/2184

EAC

The product has been certified in accordance the TP TC 012/2011 directive applicable in the Eurasian Economic Union (EAEU). The EAC conformity mark has been affixed to the product.

Ordering information

Product page

Product Configurator

1. **Configure**: Click this button on the product page.
2. Select **Extended selection**.
   ↳ The Configurator opens in a separate window.

3. Configure the device according to your requirements by selecting the desired option for each feature.
   ↳ In this way, you receive a valid and complete order code for the device.
4. **Accept**: Add the configured product to the shopping cart.

For many products, you also have the option of downloading CAD or 2D drawings of the selected product version.

5. **CAD**: Open this tab.
   ↳ The drawing window is displayed. You have a choice between different views. You can download these in selectable formats.

Scope of delivery

The scope of delivery comprises:
- Ordered version of the sensor
- Operating Instructions
- Safety instructions for the hazardous area (for sensors with Ex approval)
- Supplementary sheet for optionally ordered certificates

Accessories

The following are the most important accessories available at the time this documentation was issued.

Listed accessories are technically compatible with the product in the instructions.

1. Application-specific restrictions of the product combination are possible.
   Ensure conformity of the measuring point to the application. This is the responsibility of the operator of the measuring point.
2. Pay attention to the information in the instructions for all products, particularly the technical data.
3. For accessories not listed here, please contact your Service or Sales Center.

Device-specific accessories

Assemblies

Unifit CPA842
- Installation assembly for food, biotechnology and pharmaceutics
- With EHEDG and 3A certificate

Technical Information TI01367C

Cleanfit CPA875
- Retractable process assembly for sterile and hygienic applications
- For in-line measurement with standard sensors with 12 mm diameter, e.g. for pH, ORP, oxygen

Technical Information TI01168C

Dipfit CPA140
- pH/ORP immersion assembly with flange connection for very demanding processes

Technical Information TI00178C

Cleanfit CPA871
- Flexible process retractable assembly for water, wastewater and the chemical industry
- For applications with standard sensors with 12 mm diameter

Technical Information TI01191C

Cleanfit CPA473
- Stainless steel process retractable assembly with ball valve shutoff for particularly reliable separation of the medium from the environment

Technical Information TI00344C

Cleanfit CPA474
- Plastic process retractable assembly with ball valve shutoff for particularly reliable separation of the medium from the environment

Technical Information TI00345C

Dipfit CPA111
- Immersion and installation assembly made of plastic for open and closed vessels

Technical Information TI00112C

Flowfit CPA240
- pH/ORP flow assembly for processes with stringent requirements

Technical Information TI00179C

Flowfit CPA250
- Flow assembly for pH/ORP measurement

Technical Information TI00041C

Ecofit CPA640
- Set comprising adapter for 120 mm pH/ORP sensors and sensor cable with TOP68 coupling

Technical Information TI00246C

Flexdip CYA112
- Immersion assembly for water and wastewater
- Modular assembly system for sensors in open basins, channels and tanks
- Material: PVC or stainless steel

Technical Information TI00432C

Buffer solutions

High-quality buffer solutions from Endress+Hauser - CPY20
High-quality CPY20 pH buffers ensure maximum precision in pH calibrations. Available in pH 2.0, pH 4.0, pH 7.0, pH 9.0, pH 9.2, pH 10.0 and pH 12.0.

Measuring cables

Memosens data cable CYK10
- For digital sensors with Memosens technology

Technical Information TI00118C

Memosens laboratory cable CYK20
- For digital sensors with Memosens technology



Endress+Hauser

People for Process Automation

Consultas y ventas: AQUAREP · www.aquarep.com.ar · info@aquarep.com.ar · WhatsApp +54 9 11 6091-0087