TI00387C/07/EN/16.21-00
71550762
2021-11-10

Technical Information
Oxymax COS61D/COS61

Optical sensor for measuring dissolved oxygen



Digital optical sensor based on the principle of fluorescence quenching, with or without Memosens protocol

Application

- Wastewater treatment plants
  - Oxygen measurement and regulation in the activated sludge basin for a highly efficient biological cleaning process
  - Monitoring the oxygen content in the wastewater treatment plant outlet
- Water monitoring
  Oxygen measurement in rivers, lakes or seas as an indicator of the water quality
- Water treatment
  Oxygen measurement for status monitoring, e.g. of drinking water (oxygen enrichment, corrosion protection etc.)
- Fish farming
  Oxygen measurement and regulation for optimum living and growth conditions

Your benefits

- Optical technology:
  - Minimum maintenance
  - Maximum availability
- Sensor with digital signal processing:
  - Calibration data saved in sensor
  - High degree of EMC protection thanks to digital communication with the transmitter
- Extended maintenance intervals and a high degree of longterm stability
- Intelligent self-monitoring guarantees reliable measured values
- No flow needed - measurement possible in still water
- COS61D - the Liquiline sensor
  - Plug&Play: Safe communication based on Memosens protocol
  - Optionally with M12 plug for fast connection to the transmitter
- COS61 - the Liquisys sensor
  - Compatible with tried-and-tested COS31 with COM2x3W: Easy measuring point changeover to optical technology
  - Compatible with COS41 with COM2x3D with conversion kit

Endress+Hauser
People for Process Automation

Consultas y ventas: AQUAREP · www.aquarep.com.ar · info@aquarep.com.ar · WhatsApp +54 9 11 6091-0087

Function and system design

Measuring principle

Sensor structure

Oxygen-sensitive molecules (markers) are integrated into the optically active layer (fluorescence layer).
The fluorescence layer, an optical insulating layer and a cover layer are applied on top of one another on the carrier. The cover layer is in direct contact with the medium.
The sensor optics are directed at the rear of the carrier and therefore at the fluorescence layer.

Measurement process (principle of quenching)

If the sensor is immersed in the medium, an equilibrium is very quickly established between the oxygen partial pressure in both the medium and the fluorescence layer.

1. The sensor optics send green light pulses to the fluorescence layer.
2. The markers "respond" (fluoresce) with red light pulses.
   ↳ The duration and intensity of the response signals are directly dependent on the oxygen contents and oxygen partial pressure.

If the medium is free from oxygen, the response signals are long and very intense.

Any oxygen molecules present mask the marker molecules. As a result, the response signals are shorter and less intense.

Measurement result

▶ The sensor returns a signal that depends on the concentration of oxygen in the medium.

The air pressure can be either set statically or entered via an additional sensor. The medium temperature is automatically recorded in the sensor. Both values are taken into consideration in the calculation of the oxygen concentration.

The sensor provides measured values for temperature and partial pressure as well as a raw measured value. This value corresponds to the fluorescence decay time and is approx. 20 µs in air and approx. 60 µs in oxygen-free media.

For optimum measurement results

1. During calibration, enter the current air pressure at the transmitter.
2. If the measurement is not performed at **Air 100% rh**:
   Enter the current humidity.
3. In the case of saline media:
   Enter the salinity.
4. For measurements in the units %Vol or %SAT:
   Also enter the current operating pressure in the measuring mode.

- Operating Instructions for Memosens, BA01245C
  For all transmitters, analyzers and samplers in the Liquiline CM44x/P/R, Liquiline System CA80XX and Liquistation CSFxx product families
- Operating Instructions for Liquisys COM2x3, BA00199C

Measuring system

COS61D

A complete measuring system consists of the following components at least:
- Oxymax COS61D oxygen sensor
  with fixed cable (with ferrules or M12 plug depending on the version ordered)
- Liquiline CM44x multi-channel transmitter
- Assembly, e.g. flow assembly COA250, immersion assembly CYA112 or retractable assembly COA451

Optionally:
- Flexdip CYH112 assembly holder for immersion operation
- Extension cable CYK11 with junction box
- Cleaning system

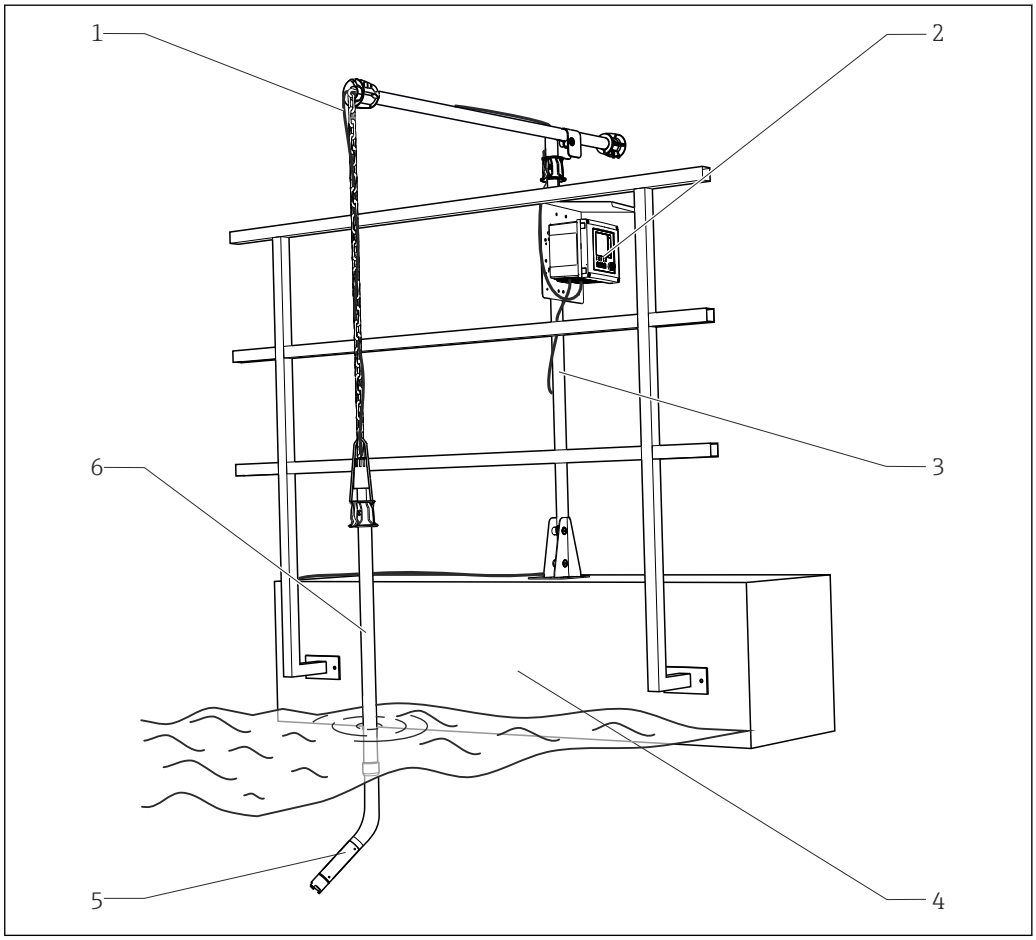

1 Example of a measuring system with COS61D

1	*Sensor cable*	*4*	*Basin rim with railing*
2	*Transmitter Liquiline CM44x*	*5*	*Oxymax COS61D oxygen sensor*
3	*Assembly Flexdip CYH112*	*6*	*Flexdip CYA112 assembly*

COS61

A complete measuring system comprises:
- Oxymax COS61 oxygen sensor
- Transmitter, e.g. Liquisys COM2x3-W
- Sensor cable
- Assembly, e.g. flow assembly COA250, immersion assembly CYA112 or retractable assembly COA451

Optionally:
- Flexdip CYH112 assembly holder for immersion operation
- VS junction box (for cable extension)
- Cleaning system

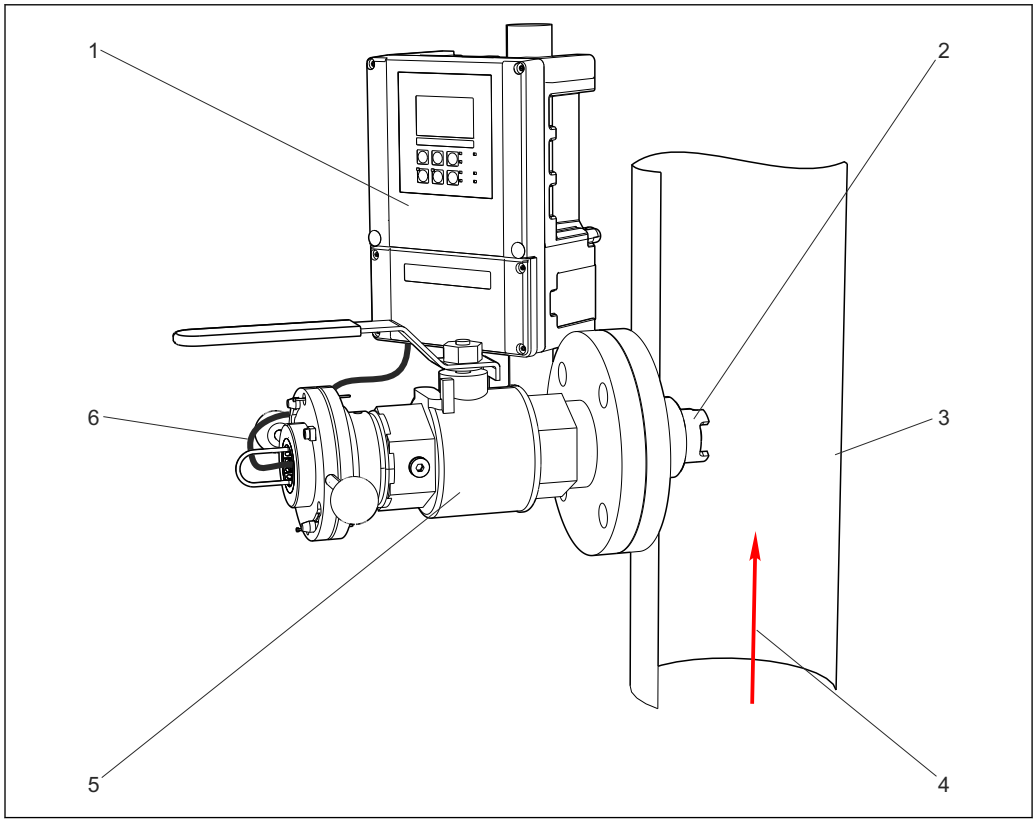

2 *Example of a measuring system with COS61*

1	*Liquisys COM253*	*4*	*Direction of medium flow*
2	*Oxymax COS61*	*5*	*Cleanfit COA451*
3	*Pipe (ascending pipe)*	*6*	*Sensor cable*

Input

Measured variables

Dissolved oxygen [mg/l, µg/l, ppm, ppb or %SAT or hPa]

Measuring ranges

Measuring ranges apply for 20 °C (68 °F) and 1013 hPa (15 psi)

With Liquiline CM44x, CM44xR, CM44P or with Liquisys COM2x3-W:
- 0 to 20 mg/l
- 0 to 400 hPa
- 0 to 200 % SAT

Power supply

Electrical connection

COS61D

Connection data

Sensor cable connected directly to the terminal connector of the basic module of the transmitter

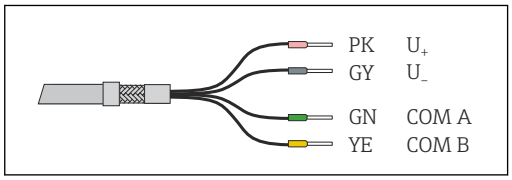

3 *Sensor fixed cable with terminated cable cores*

Optional: sensor cable plug connected to the M12 sensor socket of the transmitter
With this type of connection, the transmitter is already wired at the factory.

Connection to field device

The sensor is directly connected to the transmitter via the special measuring cable with the SXP plug.

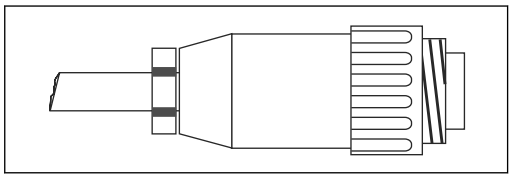

4 *SXP connector*

Connection to cabinet device

Terminal COM223	Sensor with fixed cable (OMK)		Sensor with TOP68 plug connection (CYK71)	
	Core	Assignment	Core	Assignment
87	YE	$+U_B$	YE	$+U_B$
0	GN	0 V	WH	0 V
96	PK	Communication (digital)	GN	Communication (digital)
97	BU	Communication (digital)	BN	Communication (digital)
88	BN	$-U_B$	Coax, inside	$-U_B$

1. Remove the SXP connector (transmitter side!) from the cable.
2. Refer to the table for the cable assignment and terminals of Liquisys COM223-WX/WS.
   ↳ Please note that the cable assignment varies depending on the sensor version (fixed cable or TOP68 plug connection).

Performance characteristics

Response time

From air to nitrogen at reference operating conditions:
t_{90} : 60 s

Maximum measured error [1)]

COS61D

Measuring range	Maximum measured error
< 12 mg/l	0.01 mg/l or ±1 % of reading
12 mg/l to 20 mg/l	±2% of reading

COS61

Measuring range	Maximum measured error
< 12 mg/l	0.02 mg/l or ±1 % of reading
12 mg/l to 20 mg/l	±2% of reading

Repeatability

±0.5 % of end of measuring range

Operating life of sensor cap

>2 years (under reference operating conditions, protect against direct sunlight)

Installation

Installation examples

Immersion operation

Universal holder and chain assembly

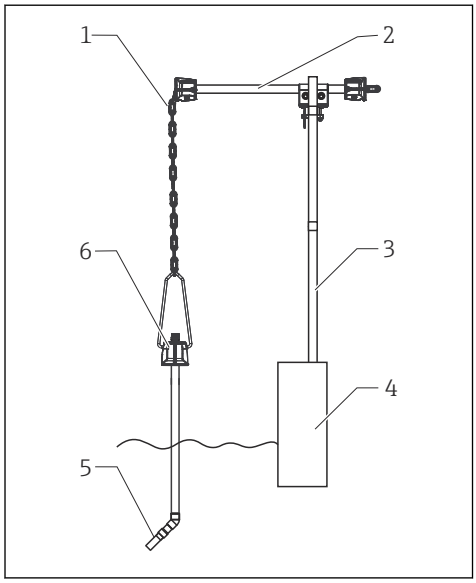

5 Chain holder on railing

1 *Chain*
2 *Holder Flexdip CYH112*
3 *Rail*
4 *Basin rim*
5 *Oxygen sensor*
6 *Wastewater assembly Flexdip CYA112*

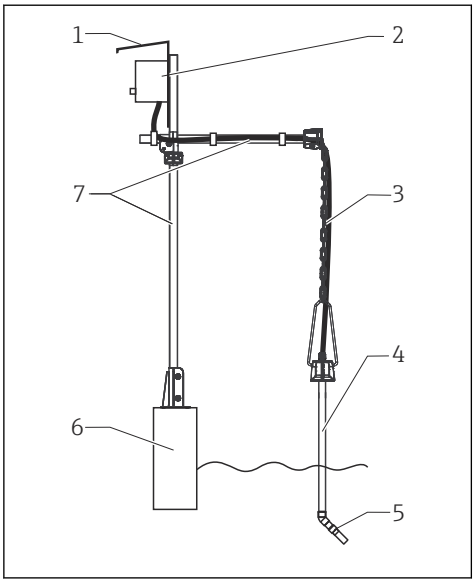

6 Chain holder on upright post

1 *Weather protection cover CYY101*
2 *Transmitter*
3 *Chain*
4 *Wastewater assembly Flexdip CYA112*
5 *Oxygen sensor*
6 *Basin rim*
7 *Holder Flexdip CYH112*

1) In accordance with IEC 60746-1 at rated operating conditions

Universal holder and fixed immersion tube

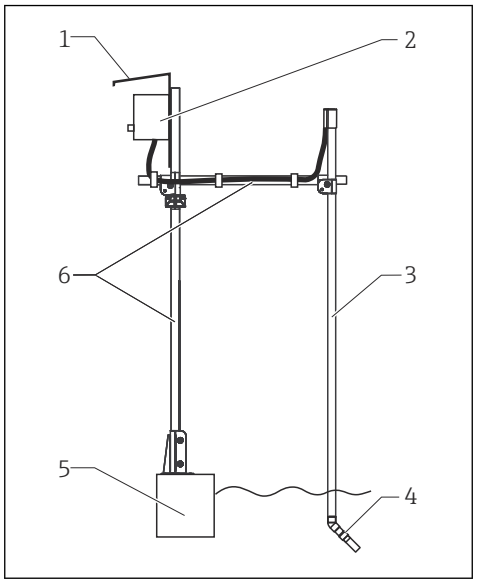

7 *Assembly holder with immersion tube*

1 *Protective cover*
2 *Transmitter*
3 *Flexdip CYA112 immersion assembly*
4 *Oxygen sensor*
5 *Basin rim*
6 *Assembly holder Flexdip CYH112*

Basin rim mounting with immersion tube

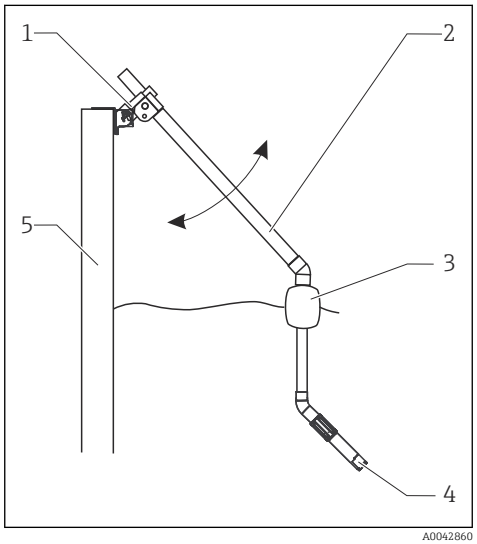

8 *Basin rim mounting*

1 *Pendulum holder CYH112*
2 *Assembly Flexdip CYA112*
3 *Assembly float*
4 *Oxygen sensor*
5 *Basin rim*

Float

The CYA112 float is for use in the case of large fluctuations in water level, for example in rivers or lakes.

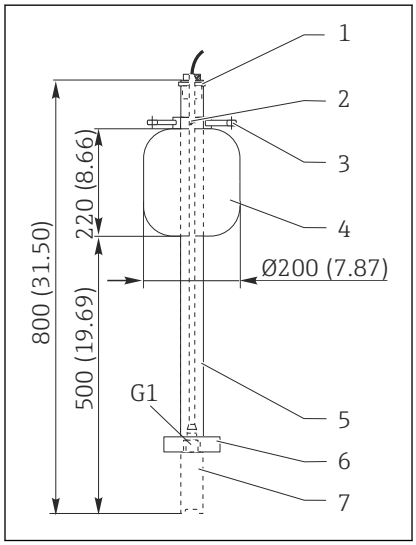

1 *Cable run with strain relief and rain shield*
2 *Fixing ring for rope and chains with terminal screw*
3 *Eyelets Ø15, 3 x 120 ° for anchoring*
4 *Plastic float, resistant to salt water*
5 *Pipe 40 x 1, stainless steel 1.4571*
6 *Bumper and ballast*
7 *Oxygen sensor*

9 *Dimensions in mm (inch)*

Flow assembly COA250

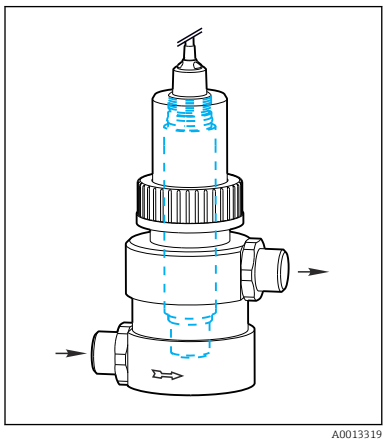

10 *COA250*

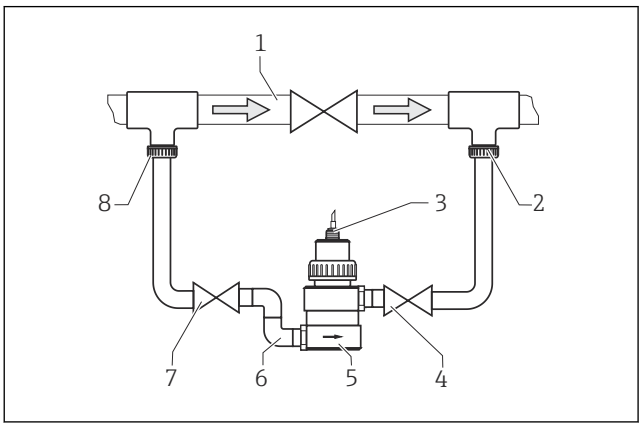

11 *Bypass installation with manually actuated valves or solenoid valves*

1 *Main pipe*
2 *Medium return*
3 *Oxygen sensor*
4, 7 *Manually actuated or solenoid valves*
5 *Flow assembly COA250-A*
6 *90 ° pipe elbow*
8 *Medium removal*

Environment

Ambient temperature

−20 to 60 °C (−4 to 140 °F)

at 95% relative air humidity, non-condensing

Storage temperature

−20 to 70 °C (−4 to 158 °F)

at 95% relative air humidity, not condensating

Degree of protection

COS61D
IP 68 (test conditions: 10 m (33 ft) water column, at 25 °C (77 °F) over 30 days)

COS61
- Fixed cable versions:
  IP 68 (test conditions: 10 m (33 ft) water column at 25 °C (77 °F) over 30 days)
- Top68 plug-in head versions:
  IP 68 (test conditions: 1 m (3.3 ft) water column at 50 °C (122 °F) over 7 days)

Electromagnetic compatibility

COS61D
Interference emission and interference immunity as per EN 61326: 2005, Namur NE 21:2007

COS61
Interference emission and interference immunity as per EN 61326: 1997 / A1: 1998

Process

Process temperature

−5 to +60 °C (20 to 140 °F)

Process pressure

Ambient pressure 1 to 10 bar (14.5 to 145 psi) abs.

Mechanical construction

Design, dimensions COS61D

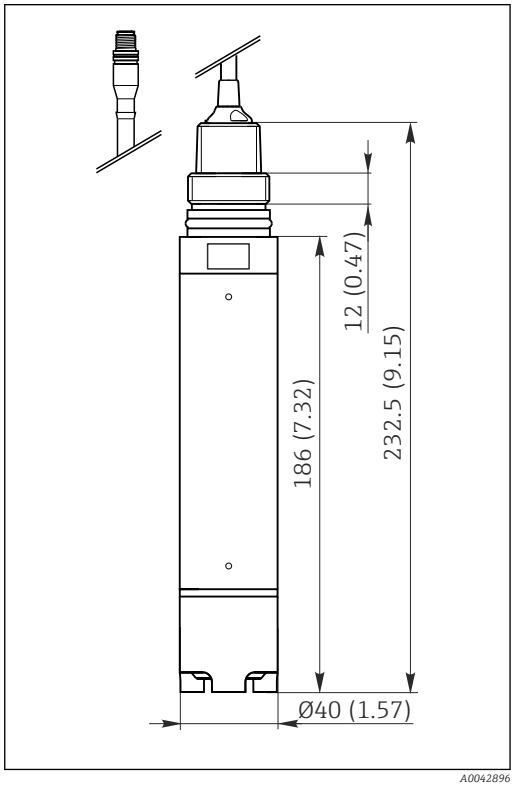

12 With optional M12 connector

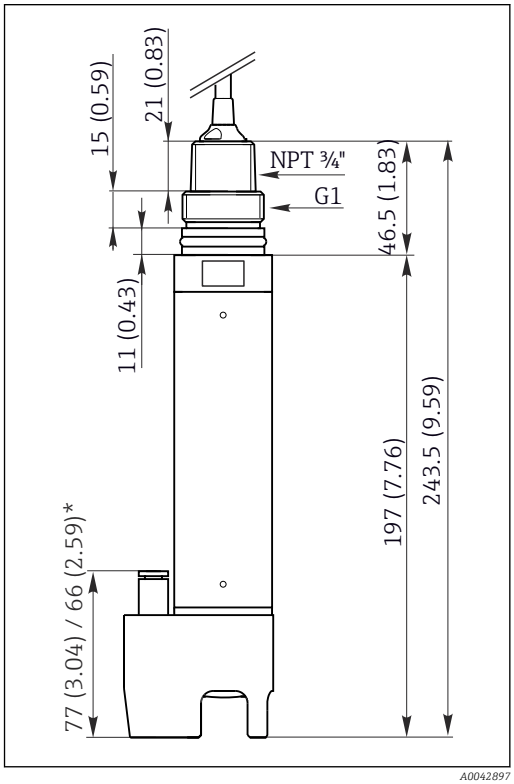

13 With optional cleaning unit

** depending on version of cleaning unit*

Dimensions in mm (inch)

design, dimension COS61

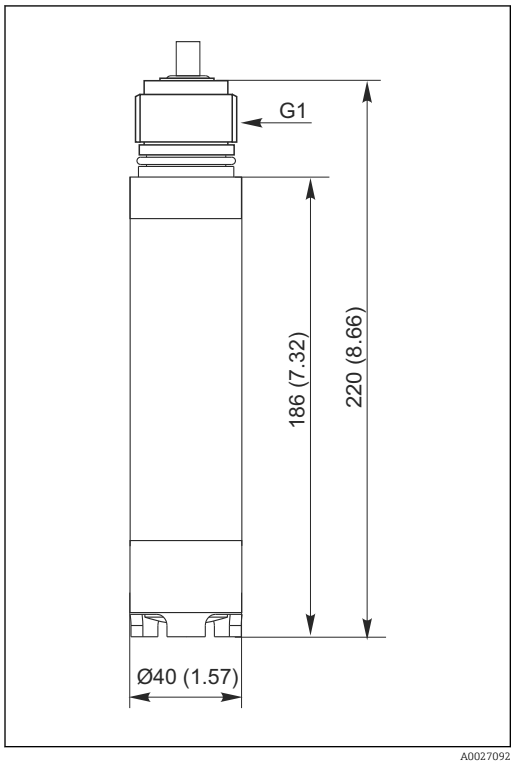

14 Version with fixed cable

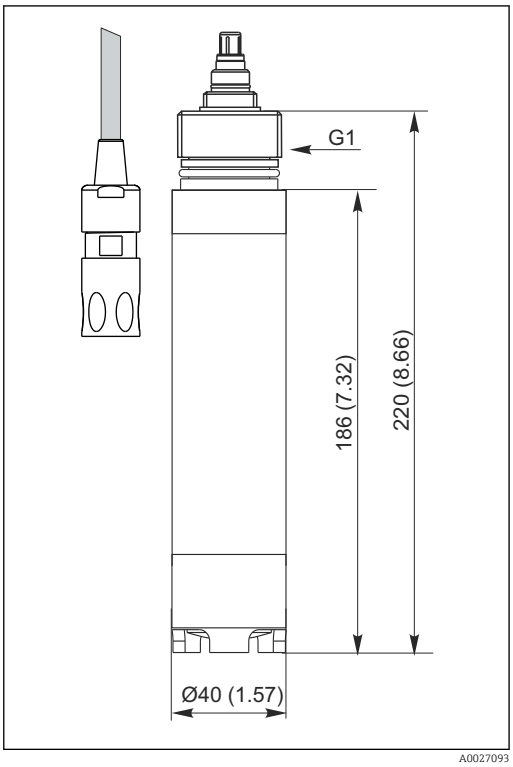

15 Version with TOP68 - plug-in head

Dimensions in mm (inch)

Optional cleaning unit

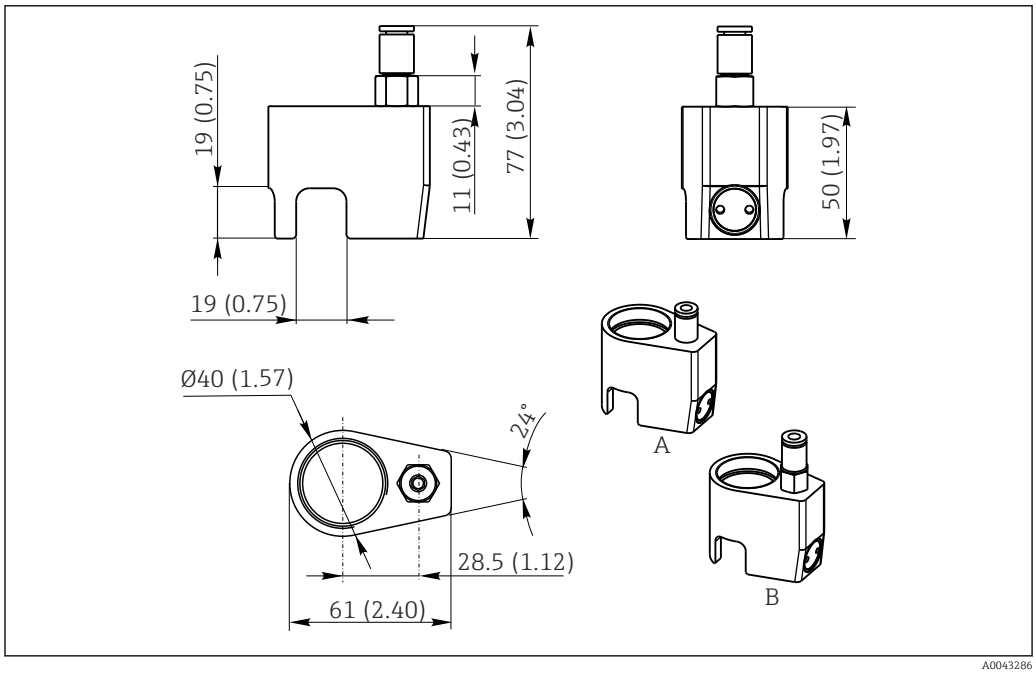

16 Dimensions in mm (inch)

A Compressed air cleaning COS61/61D OD 6/8 mm (additional information → 14
B Compressed air cleaning COS61/61D OD 6.35 mm (¼") (additional information → 14

Weight	with cable length 7 m (23 ft):	0.7 kg (1.5 lbs)
	with cable length 15 m (49 ft):	1.1 kg (2.4 lbs)
	with TOP68 plug connection:	0.3 kg (0.66 lbs) depending on version
Materials	**Parts in contact with medium**	
	Sensor cap	PVC / POM

Fluorescence layer	Silicone
Orifice plate	PET
O-rings	EPDM
Pin holder	1.4404
Shaft tube	1.4571
Housing connection	POM
Protection guard	POM
Housing air purge unit	POM

Process connection

COS61D
G1, NPT 3/4"

COS61
G1

Sensor cable

COS61D
Shielded 4-core fixed cable

COS61
Shielded 7-wire fixed cable or double-shielded coaxial cable with 4 pilot wires (with TOP68 plug connection)

Cable connection at transmitter

COS61D
- Terminal connection, end ferrules
- Optional: M12 connector

COS61
- SXP connector (field device)
- Terminal connection (panel-mounted instrument)

Maximum cable length

max. 100 m (330 ft), incl. Cable extension

Temperature compensation

Internal

Interface

COS61D
Memosens protocol

COS61
RS 485

Certificates and approvals

A list of all the approvals is provided below. The approvals that are valid for this product depend on the device version ordered.

CE mark

Declaration of conformity

The product meets the requirements of the harmonized European standards. As such, it complies with the legal specifications of the EU directives. The manufacturer confirms successful testing of the product by affixing to it the CE mark.

EAC (COS61D-GR)

The product has been certified according to guidelines TP TC 004/2011 and TP TC 020/2011 which apply in the European Economic Area (EEA). The EAC conformity mark is affixed to the product.

CSA GP (COS61D-CA)

This device has a CSA GP approval and meets the following requirements:
- Power supply via a Class 2 or limited energy source as per CSA 61010-1-12.
- Overvoltage category I.
- Ambient conditions: max. height 2 000 m (6 560 ft)

CSAus NI Cl 1, Div 2 (COS61D-CJ)

Hazardous areas as per CSAus CL 1, DIV 2 [2)]

- The device must be installed in a housing or (installation) cabinet which can only be accessed with a tool or key.
- Observe the Control Drawing and the operating conditions indicated in the Appendix to the Operating Instructions as well as the notes and instructions in the Appendix.

Ex approvals

Class 1, Division 2, Groups A, B, C and D T6; IP67/IP68 [2)]

This product meets the requirements of the following standards:
- ANSI/UL 61010-1, 3rd Ed.
- ANSI/UL 121201-2017
- ANSI/IEC 60529, Edition 2.2. 2013-08 Degrees of protection provided by enclosures (IP code)

Installation and operation in hazardous areas CL 1, DIV 2

This non-sparking device has the following specified explosion protection data:
- CSAus CL 1, DIV 2
- Groups A, B, C, and D
- Temperature class T6, −20 °C (−4 °F) ≤ Ta ≤ 60 °C (140 °F)
- Degree of protection: IP67/IP68
- Control drawing: 211050778

Ordering information

Product page

Product Configurator

On the product page there is a **Configure** button to the right of the product image.

1. Click this button.
   ↳ The Configurator opens in a separate window.

2) Only when connected to CM44x(R)-CD*

2. Select all the options to configure the device in line with your requirements.
   ↳ In this way, you receive a valid and complete order code for the device.
3. Export the order code as a PDF or Excel file. To do so, click the appropriate button on the right above the selection window.

For many products you also have the option of downloading CAD or 2D drawings of the selected product version. Click the **CAD** tab for this and select the desired file type using picklists.

Scope of delivery

Scope of delivery of sensor
- Oxygen sensor with protection cap or mounted cleaning system (optional)
- Brief Operating Instructions

Accessories

The following are the most important accessories available at the time this documentation was issued.

► For accessories not listed here, please contact your Service or Sales Center.

Assemblies (selection)

Flexdip CYA112
- Immersion assembly for water and wastewater
- Modular assembly system for sensors in open basins, channels and tanks
- Material: PVC or stainless steel

Technical Information TI00432C

Flowfit COA250
- Flow assembly for oxygen measurement

Technical Information TI00111C

Cleanfit COA451
- Manual retractable assembly made of stainless steel with ball valve shutoff
- For oxygen sensors

Technical Information TI00368C

Assembly holder

Flexdip CYH112
- Modular holder system for sensors and assemblies in open basins, channels and tanks
- For Flexdip CYA112 water and wastewater assemblies
- Can be affixed anywhere: on the ground, on the capstone, on the wall or directly onto railings.
- Plastic or stainless steel version

Technical Information TI00430C

Measuring cable

Memosens data cable CYK11
- Extension cable for digital sensors with Memosens protocol

Technical Information TI00118C

Zero-point gel

COY8
Zero-point gel for oxygen and disinfection sensors
- Oxygen-free and chlorine-free gel for the verification, zero point calibration and adjustment of oxygen and disinfection measuring points

Technical Information TI01244C

Junction box VS COS61

VS
- Junction box for cable extension of COS61 sensor with SXP plug-in connector
- With socket and 7-pin connector
- Degree of protection: IP 65
- Order number: 50001054

Junction box RM COS61D

RM
- Junction box for cable extension of COS61D sensor with Memosens plug-in connector
- With 2x PG 13.5 cable gland
- Degree of protection: IP 65
- Order number: 51500832

Protection guard

Membrane protection guard
- For using the sensor in fish farming tanks
- Order No.: 50081787

Cleaning unit

Compressed air cleaning for COSXX
- Connection: OD 6/8 mm (incl. reduction hose coupling) or OD 6.35 mm (¼")
- Materials: POM/V4A
- Order No.
  - AD 6/8 mm: 71110801
  - AD 6.35 mm (¼"): 71110802

Compressor
- For compressed air cleaning
- Order No.
  - 230 V AC order no. 71072583
  - 115 V AC order no. 71194623

Spray cleaning for CYA112 assembly
Order No.
- Assembly length 600 mm (23.62 in): 71158245
- Assembly length 1200 mm (47.42 in): 71158246

Chemoclean CYR10B
- Cleaning injector for spray cleaning and retractable assemblies

Technical Information TI01531C

Transmitter

Liquiline CM44
- Modular multi-channel transmitter for hazardous and non-hazardous areas
- Hart®, PROFIBUS, Modbus or EtherNet/IP possible
- Order according to product structure

Technical Information TI00444C

Calibration vessel COS61

Calibration vessel
- For COS61D/61
- Order No.: 51518599



Endress+Hauser

People for Process Automation

Consultas y ventas: AQUAREP · www.aquarep.com.ar · info@aquarep.com.ar · WhatsApp +54 9 11 6091-0087