TI01598C/07/EN/03.25-00
71701520
2025-03-07

Technical Information
Liquiline Mobile CML18

Multiparameter mobile device



Application

Liquiline Mobile CML18 is a multiparameter mobile device for connecting digital sensors with Memosens technology and optional operation by smartphone or other mobile devices via Bluetooth.

The device is designed for reliable operation in the field or laboratory and is particularly suitable for the following industries:
- Life sciences
- Chemical industry
- Water and wastewater
- Food and beverages
- Power stations
- Other industrial applications of liquid analysis

Your benefits

Easy operation:
Use your own tablets and smartphones for operation and commissioning.

Enjoy all the benefits of Memosens technology:
Memosens sensors offer you the most secure method of data transmission, maximum measured value availability and easy, straightforward handling.

Trust your measured values:
As the same technology is used, complete consistency between process and sample measurements is guaranteed.

Simplify your daily tasks:
Real plug & play with pre-calibrated Memosens sensors allows you to switch quickly between parameters.

Use the data logger function:
Save over 10,000 measured values with a time and date stamp.

Simply take it with you to any measuring point:
The versatile device can be used wherever it is needed - from the laboratory to the process. Small and handy, it fits into any shirt pocket.

Endress+Hauser
People for Process Automation

Consultas y ventas: AQUAREP · www.aquarep.com.ar · info@aquarep.com.ar · WhatsApp +54 9 11 6091-0087

Function and system design

Product description

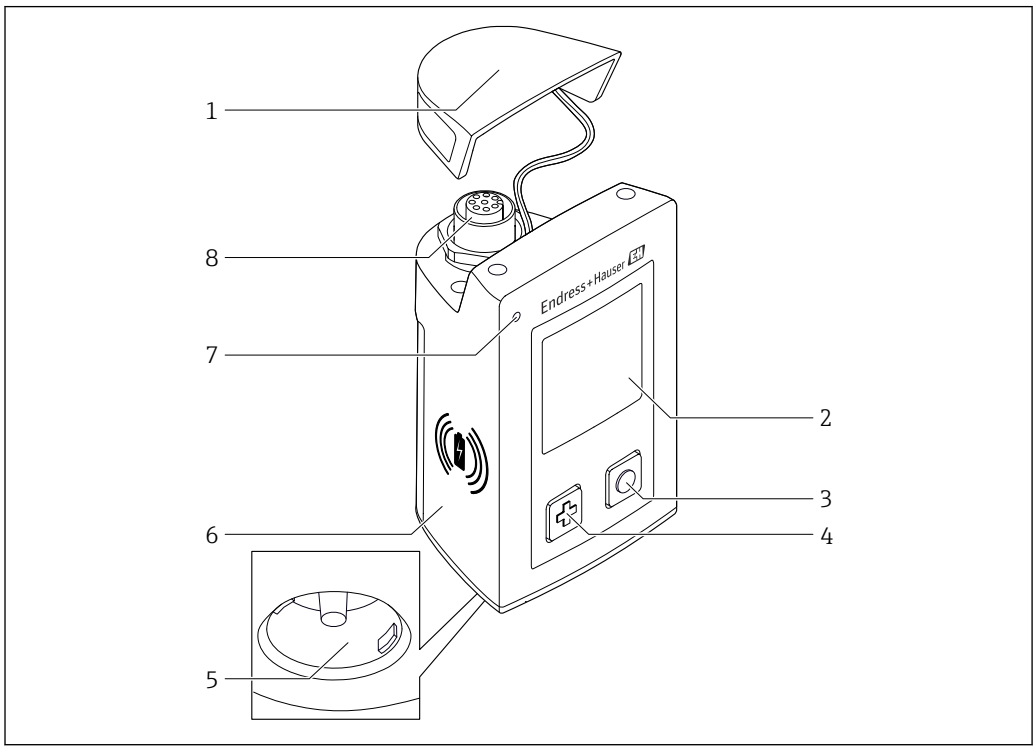

1 CML18

1 *Protective cap*
2 *Display screen with automatic screen rotation*
3 *"Select" button*
4 *"Next" button*
5 *Memosens connection*
6 *Area for wireless charging*
7 *Status LED*
8 *M12 connection*

Measuring system

The measuring system consists at least of a Liquiline Mobile CML18 transmitter and a Memosens sensor.

Connection options:
- M12 connection
  - Connection of a Memosens sensor via the M12 Memosens cable (optionally available)
  - Connection of the Liquiline Mobile CML18 to a PC for data transmission or to charge the device via the M12-USB cable (optionally available)
- Bluetooth interface to connect the Liquiline Mobile CML18 to a compatible terminal (not supplied) for data analysis, data transmission and device configuration via the SmartBlue app
- Memosens connection directly on the device for a Memosens sensor

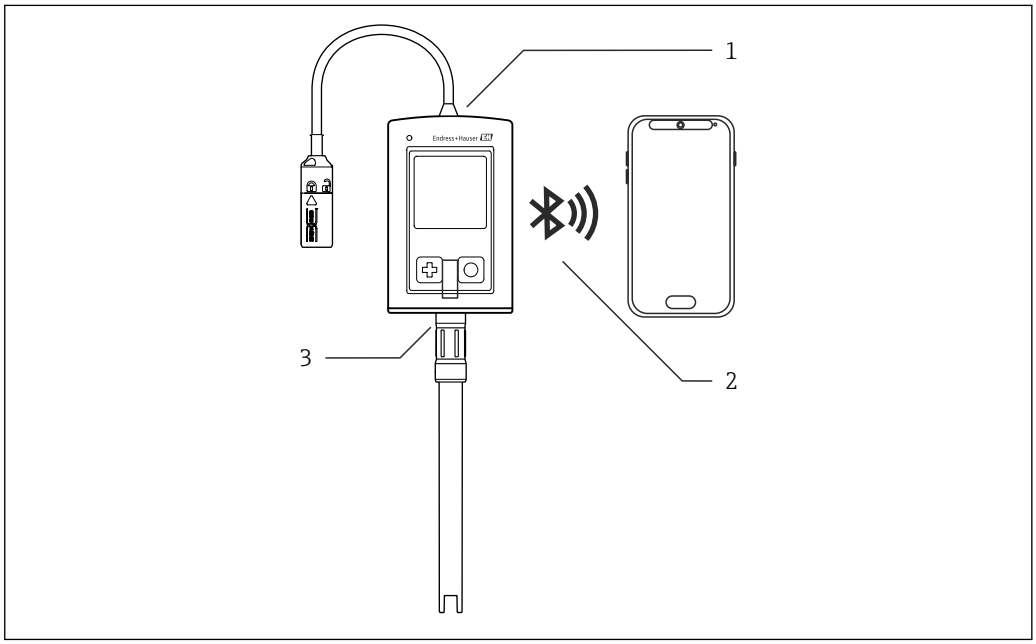

2 *Cable, sensor and smartphone not supplied*

1 M12 connection
2 Bluetooth interface
3 Memosens connection

The simultaneous connection of 2 sensors is not supported.

Operation is interrupted while the log data are read out via the cable or during firmware updates.

Dependability

Reliability

Memosens

Memosens makes your measuring point safer and more reliable:
- Non-contact, digital signal transmission enables optimum galvanic isolation
- No contact corrosion
- Completely watertight
- Sensor can be calibrated in a lab, thus increasing the availability of the measuring point in the process
- Intrinsically safe electronics mean operation in hazardous areas is not a problem.
- Predictive maintenance thanks to recording of sensor data, e.g.:
  - Total hours of operation
  - Hours of operation with very high or very low measured values
  - Hours of operation at high temperatures
  - Number of steam sterilizations
  - Sensor condition

Input

Input power

Wireless charging	5 W
M12 connection	5 V; 0.6 A

Measured variables

- pH
- ORP
- pH/ORP
- Oxygen
- Conductivity
- Temperature

Measuring range

→ Documentation of the connected sensor

Type of input

Memosens connection for sensors with Memosens technology

M12 connection for digital measuring cable CYK10, CYK20 for sensors with Memosens technology

For a list of compatible sensors, see: → 14

Output

Output signal

Memosens M12 (maximum 80 mA)

Power supply

Supply voltage

Inductive charging: use Qi-certified devices (min. 5 W output power)

The power supply unit must supply an output current of at least 1500 mA.

Battery rated capacity

1000 mAh (min. 950 mAh)

Battery life

Max. 48 h (with adapted energy settings)

Overvoltage protection

IEC 61 000-4-4 with 0.6 kV

IEC 61 000-4-5 with 2.0 kV

Sensor connection

Sensors with Memosens technology

Cable specification

Digital measuring cable CYK10-Axx2+x

Digital measuring cable CYK20-AAxxC1

M12 USB data + charging cable

Environment

Ambient temperature range

Charging: 0 to +45 °C (32 to 113 °F)

Operation: −10 to +60 °C (14 to 140 °F)

The maximum ambient temperature depends on the process temperature and the installation position.

Storage temperature

−20 to +45 °C (−4 to 113 °F)

Elevated storage temperatures reduce the battery capacity.

Relative humidity

0 to 95 %

Degree of protection

IP66

Electrical safety

EN 61010-1

Pollution degree

Complete device:	Pollution level 4
Internal:	Pollution level 2

Radio standards

The device meets the radio standards of the following countries/regions:

- Europe
- USA
- China
- Canada
- Japan
- South Korea
- Brazil
- Mexico
- Singapore
- Argentina
- Thailand
- Australia
- Indonesia

Mechanical construction

Dimensions

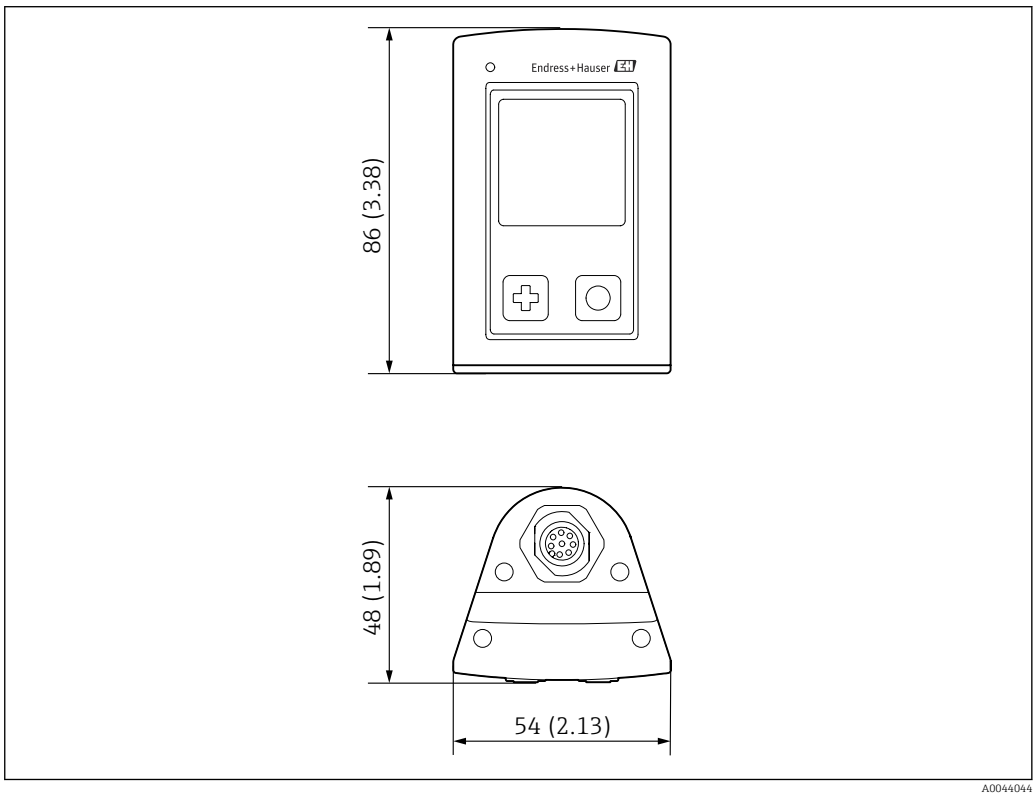

3 Dimensions: mm (in)

Weight

Liquiline Mobile CML18	155 g (5.5 oz)

Materials

Materials not in contact with the medium

Components	Material
Housing	PBT
Display window, light guide	PMMA
Buttons, cap	TPE
M12 connection	CuZn, nickel-plated

Information according to REACH Regulation (EC) 1907/2006 Art. 33/1:

The device battery contains the SVHC 1.3 propane sulton ; ethylene glycol dimethyl ether (CAS number [1)] 110-71-4) with more than 0.1% (w/w). The product does not present a hazard if it is used as designated.

Impact loads

The product is designed for mechanical impact loads of 1 J (IK06) as per the requirements of EN 61010-1.

1) CAS = Chemical Abstracts Service, international identification standard for chemical substances

Operability

Operation concept

There are three options for operating and configuring the device:
- Internal operating menu with keys
- Memobase Pro app via Bluetooth® LE wireless technology
- SmartBlue app via Bluetooth® LE wireless technology → 10

Languages

The following display languages are available:
- English
- German
- Croatian
- Spanish
- Italian
- French
- Japanese
- Korean
- Dutch
- Polish
- Portuguese
- Russian
- Chinese
- Czech
- Norwegian

Local operation

Display and operating elements

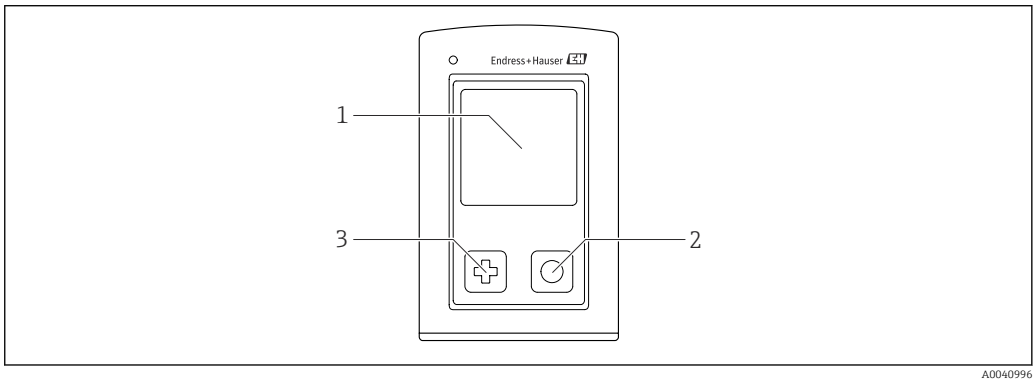

4 Overview of display and operating elements

1 Display
2 "Select" button
3 "Next" button

Button functions

Button	Device switched off	On measuring screen	In the menu
⊞	Switch on	Scroll through measuring screens	Scroll down
⊙	Switch on	Save current measured values (Grab Sample)	Confirm/select
⊞ (long hold)	-	Open the menu	Change to the measuring screen
⊞ + ⊙ (Press and hold for more than 7 seconds until the green LED lights up and the device restarts.)	Forced hardware reset	Forced hardware reset	Forced hardware reset

Structure and function of the operating menu

Power-off	
Power-off ⏭	

Application			
Data logger ▷	Data logger ⏭		
	Log interval ⏭		
	Cond. unit ⏭		
	Res. unit ⏭		
	Erase data ▷	Erase grab values ▷	Abort ⏭
			Erase ⏭
		Erase continuous logs ▷	Abort ⏭
			Erase ⏭
Data logger plot ⏭			
Units ⏭			

Diagnostics		
Sensor info ⏭		
Calibration info ⏭		
Diagnostics list ⏭		
Data logger entries ⏭		
Display test ⏭		
Device info ▷	Manufacturer ⏭	
	Software version ⏭	
	Serial number ⏭	
	Name ⏭	
	Extended order code ⏭	

System/Language		
Display language ⏭		
Bluetooth ⏭		
Display brightness ⏭		
Signal sounds ⏭		
M12 CSV ⏭		
Power management ▷	Power save w. charger ⏭	
	Power save w/o charger ⏭	
	Power-off w. charger ⏭	
	Power-off w/o charger ⏭	
Regulatory information ⏭		

Support links	
Support links ⏭	

Guidance	
1 point calib. (ORP/Redox)	
2 point calibration (pH and ISFET)	
Cell constant (Inductive/conductive conductivity)	
Installation factor (Conductive conductivity)	
Air 100% rh (Oxygen)	
Air variable (Oxygen)	
1 point calib. (Oxygen)	

Local display

Display structure

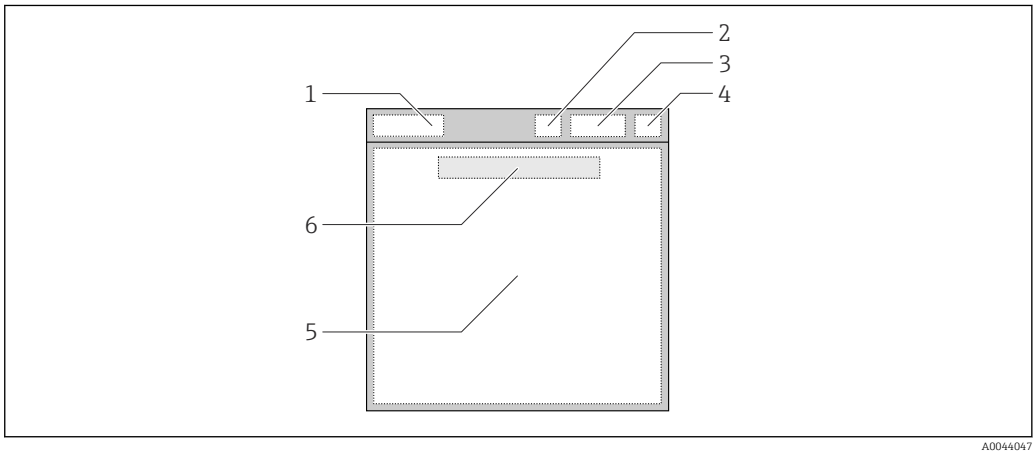

5 Schematic representation of the display structure

1 *Menu path/title of measuring screen*
2 *Bluetooth status*
3 *Battery level, charging information*
4 *NAMUR indicator*
5 *Measuring screen*
6 *Date and time (displayed in main menu and if no sensor is connected)*

Status according to NAMUR NE107 categories:

NAMUR indicator	Status
OK	The device and sensor are working reliably.
F	Failure of device or sensor. F status signal as per NAMUR NE107
M	Device or sensor requires maintenance. M status signal as per NAMUR NE107
C	Device or sensor undergoing function check. C status signal as per NAMUR NE107
S	Device or sensor being operated out of specification. S status as per NAMUR NE107

Measuring screens

The display can show 3 measuring screens that the user can switch between:

Measuring screen (1 of 3)	Measuring screen (2 of 3)	Measuring screen (3 of 3)
Primary value	Primary and secondary measured value	All measured values of the sensor input

LED status indication

The status LED is used for the quick visualization of the sensor status.

LED indicators	Status
Solid green	Sensor working correctly
Solid red	No sensor connected
Flashing green (while the device is switched off)	Battery charging
Flashes red	Sensor error

Remote operation

Operation via Memobase Pro app

- Connection of two CML18 devices simultaneously with color coding for differentiation
- Save measured values via the app and via CML18
- Create samples by scanning a QR code or manual data entry
- Assign measured values of a sample
- Clearly identify samples with unique ID, photo, GPS coordinates and comment function
- Export measured values to a CSV file
- Calibrate sensors using guided wizard, traceable storage of calibration data
- Enter data from buffer solutions and reference buffer solutions. E+H buffer solutions and reference buffer solutions can be imported by scanning a QR code.

The Memobase Pro app is available in the relevant app stores for iOS devices and Android devices.

Operation via SmartBlue app

The SmartBlue App is available for download from the Google Play Store for Android devices and from the Apple App Store for iOS devices.

Download the SmartBlue App.

► Use the QR codes to download the app.



A0033202

6 Download links

System requirements

- iOS devices: iPhone 4S or higher from iOS9.0; iPad2 or higher from iOS9.0; iPod Touch 5th generation or higher from iOS9.0
- Devices with Android: from Android 4.4 KitKat and Bluetooth® 4.0
- Internet access

► Open the SmartBlue App.



A0029747

7 *SmartBlue App icon*

Bluetooth must be enabled on both devices.

Enable Bluetooth

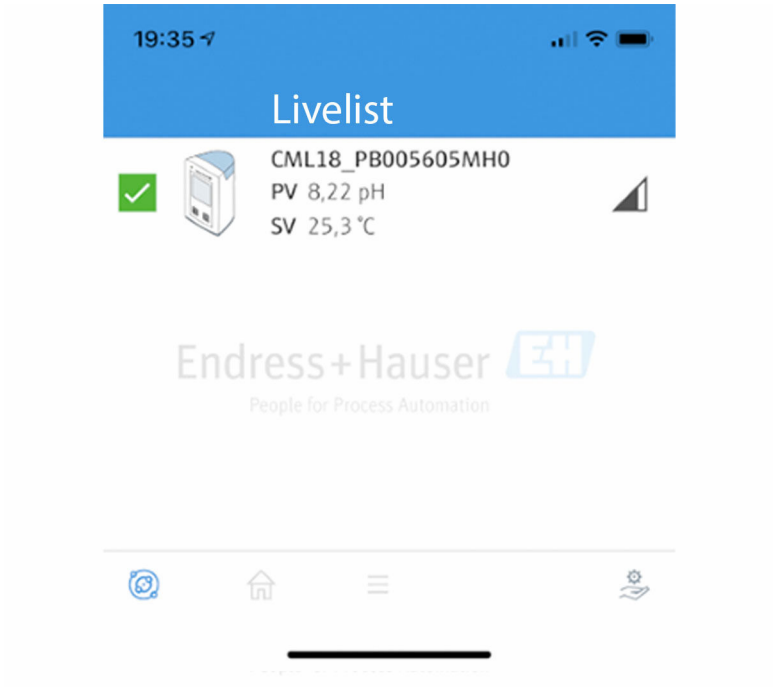

A0044142

8 *SmartBlue App Livelist*

The Livelist displays all of the devices that are within range.

- ▶ Tap the device to select it.
- ▶ Log in with user name and password.

- User name: **admin**
- Initial password: **Serial number of the device**

Change the user name and password after logging in for the first time.

In the Home view, the current measured values are displayed along with the device information (tag, serial number, firmware version, order code).

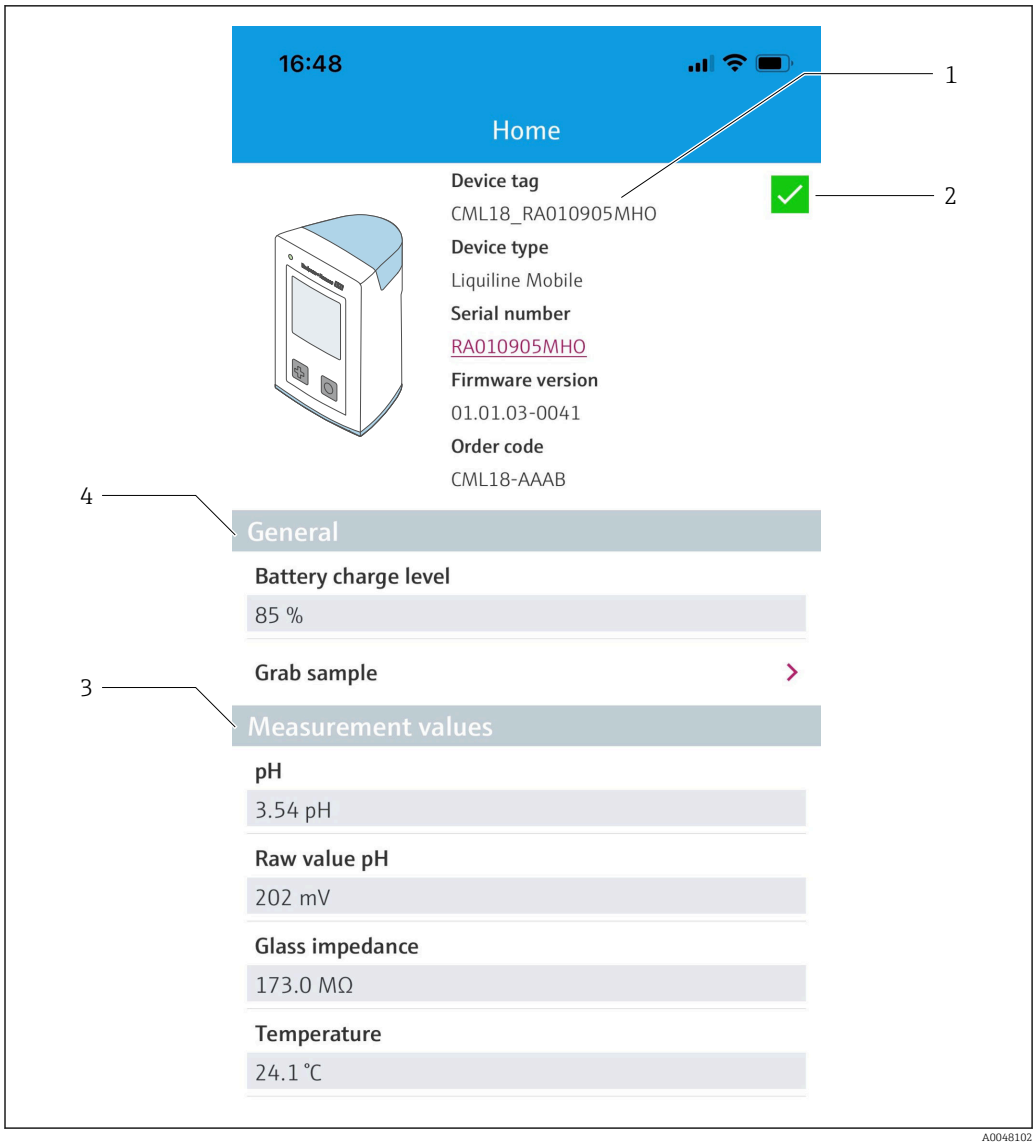

9 *Home view of SmartBlue app with current measured values*

1 *CML18 system and device information*
2 *Current NAMUR status and shortcut to diagnostic list*
3 *Overview of measured values of connected sensor*
4 *Battery charge level and sampling option*

Operation is via 4 main menus:

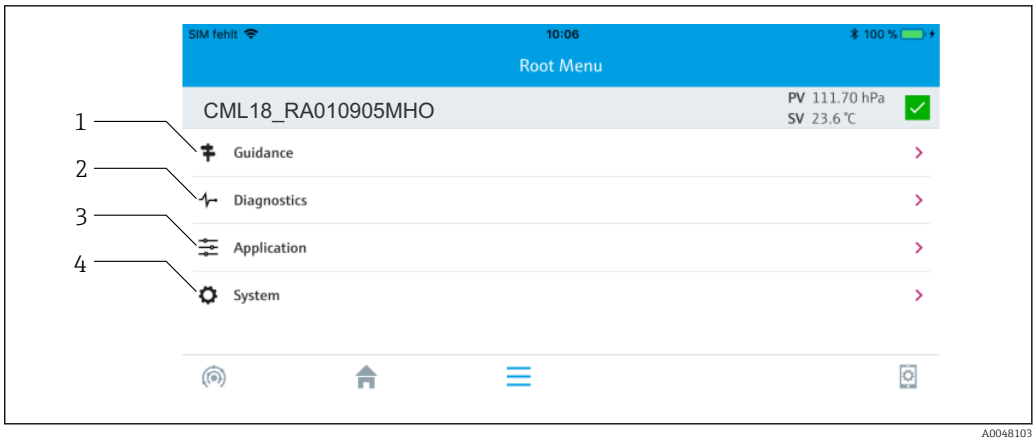

10 *Main menus of the SmartBlue app*

1 *Guidance*
2 *Diagnostics*
3 *Application*
4 *System*

Menu	Function
Guidance	Contains functions that involve a sequence of activities in itself (= "Wizard", guided operation). E.g. Calibration or data logger export.
Diagnostics	Contains information on operation, diagnostics and troubleshooting, as well as configuration of the diagnostic behavior.
Application	Sensor data for specific optimization and for detailed process adjustment. Adapts the measuring point to the application.
System	These menus contain parameters for configuring the overall system, e.g. Time and date options.

Certificates and approvals

CE mark

The product meets the requirements defined in the legal provisions of the applicable EU directives. The product complies with the applicable harmonized European standards. The manufacturer confirms successful testing of the product by affixing to it the CE mark.

Radio approvals

See Special Documentation for radio approvals: SD02905C

Ordering information

Product page

Product Configurator

1. **Configure**: Click this button on the product page.
2. Select **Extended selection**.
   ↳ The Configurator opens in a separate window.
3. Configure the device according to your requirements by selecting the desired option for each feature.
   ↳ In this way, you receive a valid and complete order code for the device.

4. **Accept**: Add the configured product to the shopping cart.

For many products, you also have the option of downloading CAD or 2D drawings of the selected product version.

5. **CAD**: Open this tab.
   ↳ The drawing window is displayed. You have a choice between different views. You can download these in selectable formats.

Scope of delivery

The scope of delivery comprises:
- 1 Liquiline Mobile CML18
- 1 M12-USB data and charging cable
- 1 Brief Operating Instructions in German
- 1 Brief Operating Instructions in English

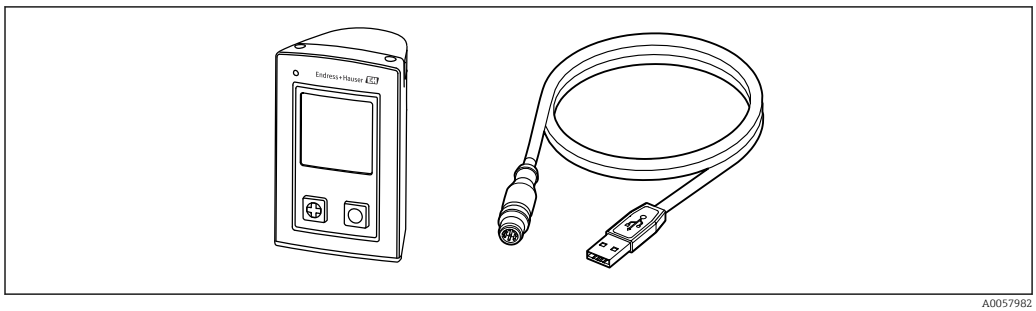

A0057982

Inductive charger and power unit are available separately.

▶ If you have any queries:
Please contact your supplier or local sales center.

Accessories

The latest list of accessories and all compatible Memosens sensors are provided on the product page:

Device-specific accessories

Sensors

Laboratory sensors

pH sensors

Memosens CPL51E
- pH sensor for laboratory measurements and random sampling in the field
- Digital with Memosens 2.0 technology
- Robust pH sensor with plastic shaft

Technical Information TI01672C

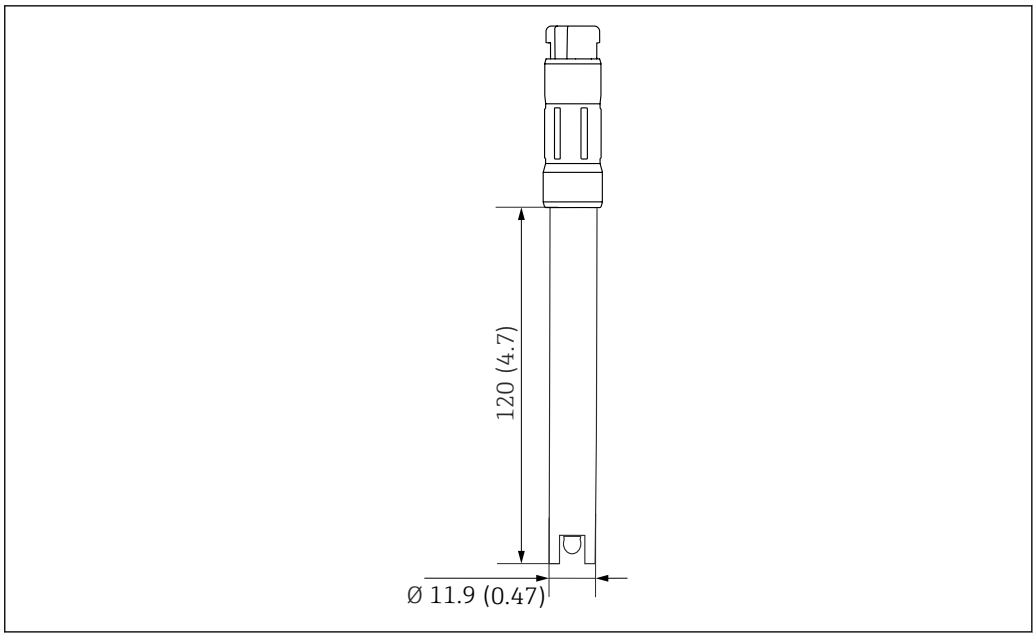

A0047294

Memosens CPL53E
- pH sensor for laboratory measurements and random sampling
- Digital with Memosens 2.0 technology
- Versatile pH sensor with very fast response time

Technical Information TI01676C

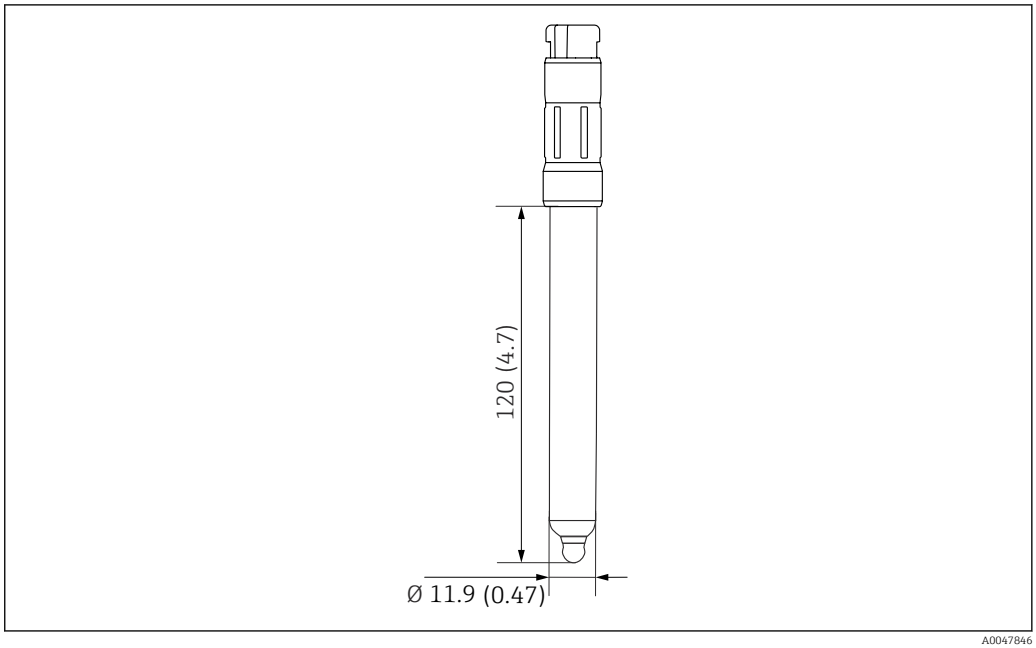

A0047846

Memosens CPL57E
- pH sensor for laboratory measurements and random sampling
- Digital with Memosens 2.0 technology
- pH sensor for pure and ultrapure water

Technical Information TI01675C

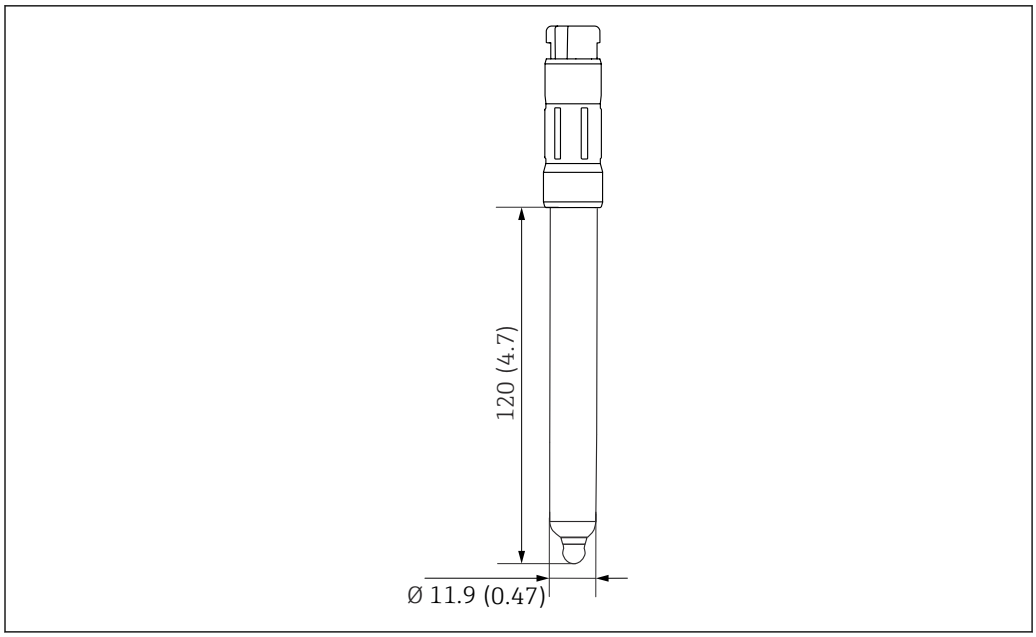

A0047846

Memosens CPL59E
- pH sensor for laboratory measurements and random sampling in the field
- Digital with Memosens 2.0 technology
- Robust pH sensor with PTFE junction and ion trap

Technical Information TI01674C

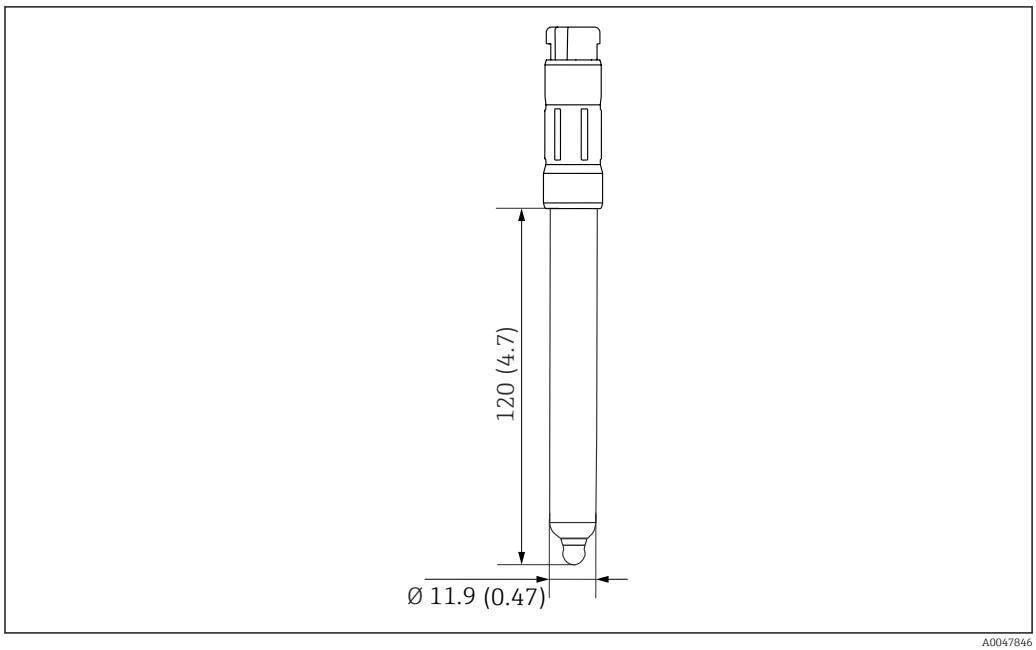

A0047846

Conductivity sensors

Memosens CLL47E
- Contacting conductivity sensor for laboratory measurements and random sampling in the field
- Digital with Memosens 2.0 technology
- 4-electrode sensor with large measuring range

Technical Information TI01529C

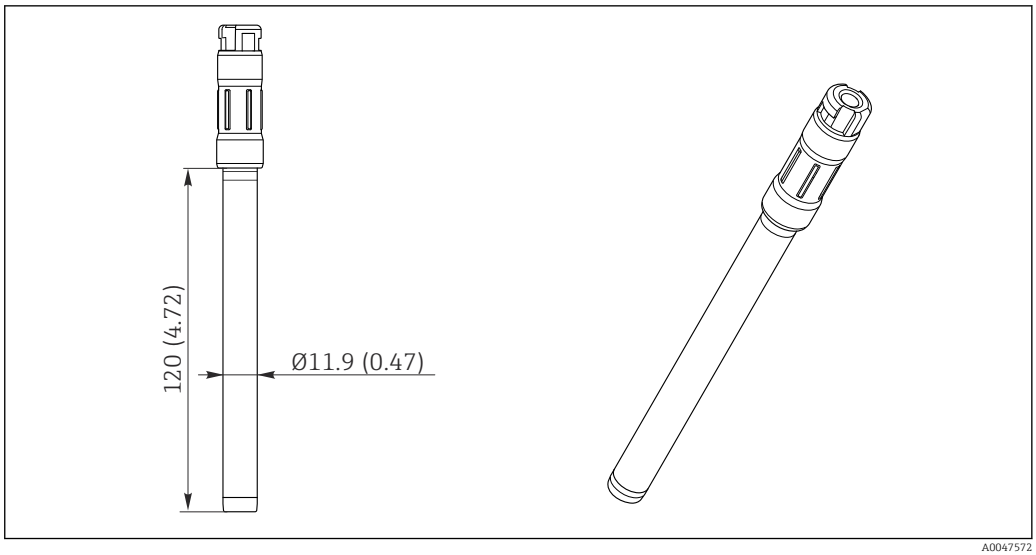

A0047572

Oxygen sensors

Memosens COL37E
- Agile, optical oxygen sensor for laboratory measurements and random sampling in the field
- Digital with Memosens 2.0 technology

Technical Information TI01678C

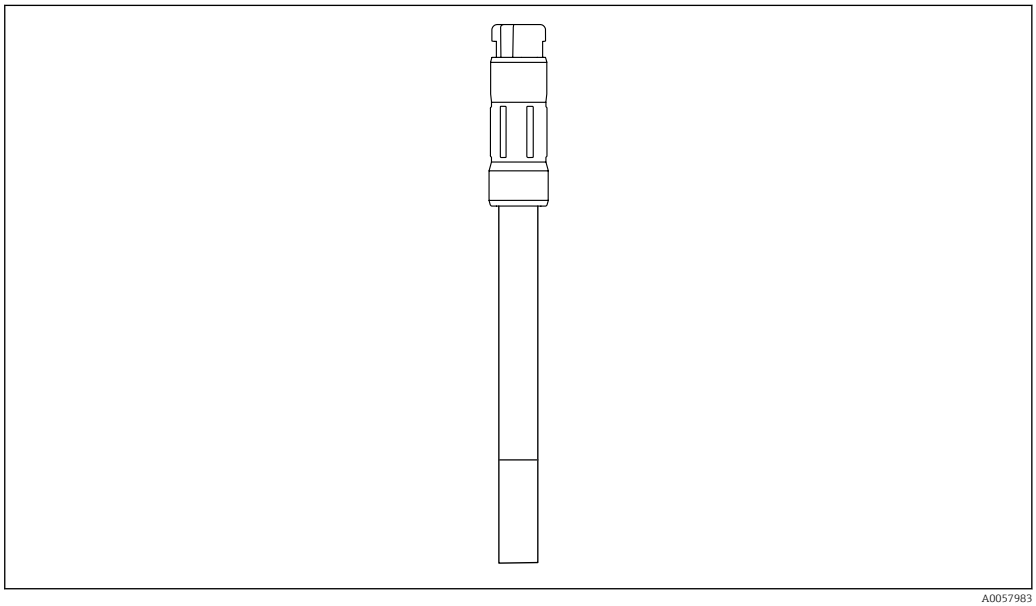

A0057983

Process sensors

The device supports process sensors with product names ending in "E" in compatibility mode. This means that the functional scope of the previous product is available. The product name of each of the previous products ends in "D", otherwise they are identical.

pH glass electrodes

Memosens CPS11E
- pH sensor for standard applications in process and environmental engineering
- Digital with Memosens 2.0 technology

Technical Information TI01493C

Memosens CPS31E
- pH sensor for standard applications in drinking water and swimming pool water
- Digital with Memosens 2.0 technology

Technical Information TI01574C

Memosens CPS41E
- pH sensor for process technology
- With ceramic junction and KCl liquid electrolyte
- Digital with Memosens 2.0 technology

Technical Information TI01495C

Memosens CPS61E
- pH sensor for bioreactors in life sciences and for the food industry
- Digital with Memosens 2.0 technology

Technical Information TI01566C

Memosens CPS71E
- pH sensor for chemical process applications
- Digital with Memosens 2.0 technology

Technical Information TI01496C

Memosens CPS171D
- pH electrode for bio-fermenters with digital Memosens technology

Technical Information TI01254C

Memosens CPS91E
- pH sensor for heavily polluted media
- With open aperture
- Digital with Memosens 2.0 technology

Technical Information TI01497C

Memosens CPF81E
- pH sensor for mining operations, industrial water and wastewater treatment
- Digital with Memosens 2.0 technology

Technical Information TI01594C

Enamel pH electrodes

Ceramax CPS341D
- pH electrode with pH-sensitive enamel
- Meets highest demands of measuring accuracy, pressure, temperature, sterility and durability

Technical Information TI00468C

ORP sensors

Memosens CPS12E
- ORP sensor for standard applications in process and environmental engineering
- Digital with Memosens 2.0 technology

Technical Information TI01494C

Memosens CPS42E
- ORP sensor for process technology
- Digital with Memosens 2.0 technology

Technical Information TI01575C

Memosens CPS72E
- ORP sensor for chemical process applications
- Digital with Memosens 2.0 technology

Technical Information TI01576C

Memosens CPS92E
- ORP sensor for use in heavily polluted media
- Digital with Memosens 2.0 technology

Technical Information TI01577C

Memosens CPF82E
- ORP sensor for mining operations, industrial water and wastewater treatment
- Digital with Memosens 2.0 technology

Technical Information TI01595C

Memosens CPS92E
- ORP sensor for use in heavily polluted media
- Digital with Memosens 2.0 technology

Technical Information TI01577C

pH ISFET sensors

Memosens CPS47E
- ISFET sensor for pH measurement
- Digital with Memosens 2.0 technology

Technical Information TI01616C

Memosens CPS77E
- Sterilizable and autoclavable ISFET sensor for pH measurement
- Digital with Memosens 2.0 technology

Technical Information TI01396

Memosens CPS97E
- ISFET sensor for pH measurement
- Digital with Memosens 2.0 technology

Technical Information TI01618C

pH/ORP combined sensors

Memosens CPS16E
- pH/ORP sensor for standard applications in process technology and environmental engineering
- Digital with Memosens 2.0 technology

Technical Information TI01600C

Memosens CPS76E
- pH/ORP sensor for process technology
- Digital with Memosens 2.0 technology

Technical Information TI01601C

Memosens CPS96E
- pH/ORP sensor for heavily polluted media and suspended solids
- Digital with Memosens 2.0 technology

Technical Information TI01602C

Conductivity sensors with conductive measurement of conductivity

Memosens CLS15E
- Digital conductivity sensor for measurements in pure and ultrapure water
- Conductive measurement
- With Memosens 2.0

Technical Information TI01526C

Memosens CLS16E
- Digital conductivity sensor for measurements in pure and ultrapure water
- Conductive measurement
- With Memosens 2.0

Technical Information TI01527C

Memosens CLS21E
- Digital conductivity sensor for media with medium or high conductivity
- Conductive measurement
- With Memosens 2.0

Technical Information TI01528C

Indumax CLS54D
- Inductive conductivity sensor
- With certified, hygienic design for food, beverages, pharmaceuticals, and biotechnology

Technical Information TI00508C

Memosens CLS82E
- Hygienic conductivity sensor
- Digital with Memosens 2.0 technology

Technical Information TI01529C

Oxygen sensors

Memosens COS22E
- Hygienic amperometric oxygen sensor with maximum measurement stability over multiple sterilization cycles
- Digital with Memosens 2.0 technology

Technical Information TI01619C

Memosens COS51E
- Amperometric oxygen sensor for water, wastewater and utilities
- Digital with Memosens 2.0 technology

Technical Information TI01620C

Memosens COS81D
- Sterilizable, optical sensor for dissolved oxygen
- With Memosens technology

Technical Information TI01201C

Memosens COS81E
- Hygienic optical oxygen sensor with maximum measurement stability over multiple sterilization cycles
- Digital with Memosens 2.0 technology

Technical Information TI01558C

Buffer and calibration solutions



A0057800

pH

High-quality buffer solutions from Endress+Hauser - CPY20
Solutions that are produced in the production laboratory and bottled for testing in the calibration laboratory are used as secondary reference buffer solutions. This test is carried out on a partial sample in accordance with the requirements of ISO 17025.

Conductivity

Conductivity calibration solutions CLY11
Precision solutions referenced to SRM (Standard Reference Material) by NIST for qualified calibration of conductivity measuring systems in accordance with ISO 9000
- CLY11-A, 74 µS/cm (reference temperature 25 °C (77 °F)), 500 ml (16.9 fl.oz)
  Order No. 50081902
- CLY11-B, 149.6 µS/cm (reference temperature 25 °C (77 °F)), 500 ml (16.9 fl.oz)
  Order No. 50081903
- CLY11-C, 1.406 mS/cm (reference temperature 25 °C (77 °F)), 500 ml (16.9 fl.oz)
  Order No. 50081904
- CLY11-D, 12.64 mS/cm (reference temperature 25 °C (77 °F)), 500 ml (16.9 fl.oz)
  Order No. 50081905

Technical Information TI00162C

Protective cover

Order code: 71530939
- Comprehensive protection
- Extremely robust
- Tabs and eyelets provide a range of securing options

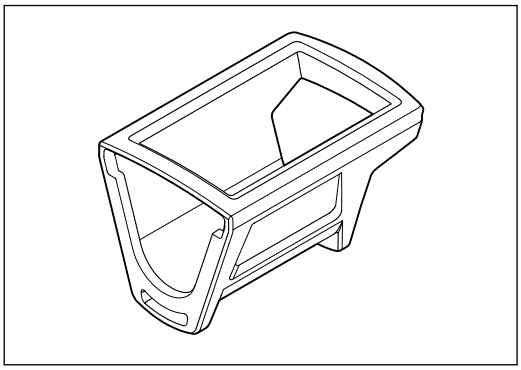

A0047710

Examples of securing options
Eyelet to secure a lanyard, for hanging or attaching to hooks or guard rails.

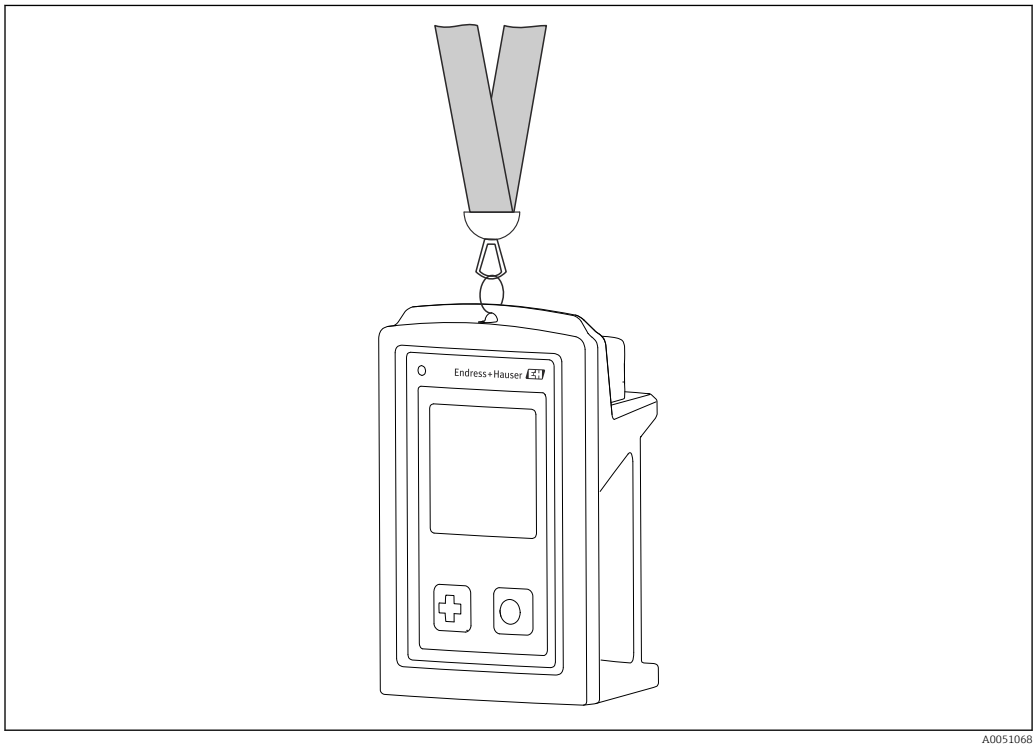

A0051068

Examples of securing options
Tabs for securing with Velcro tape, e.g. for wearing on the wrist or belt, or securing to guard rails

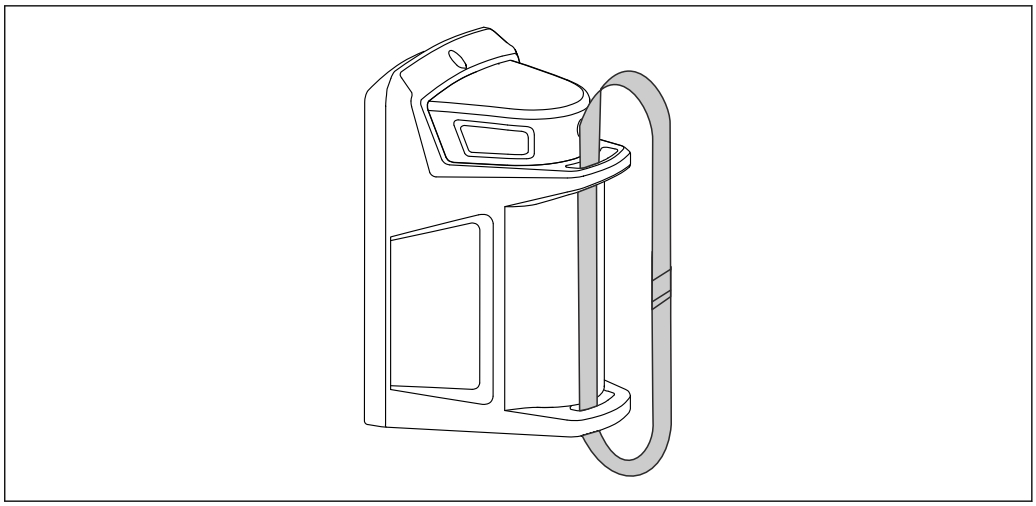

A0051069

Fieldcase

Order code: 71631792
Provides space for
- CML18 with protective cover
- 4 Memosens sensors
- Additional accessories, e.g. Reference buffer solutions or calibration buffer
- Measuring cable and data and charging cable



A0055606

Immersion assembly for laboratory area

Order code: 71638868
- Shock protection for 12 mm sensors
- For use with Memosens data cable CYK10

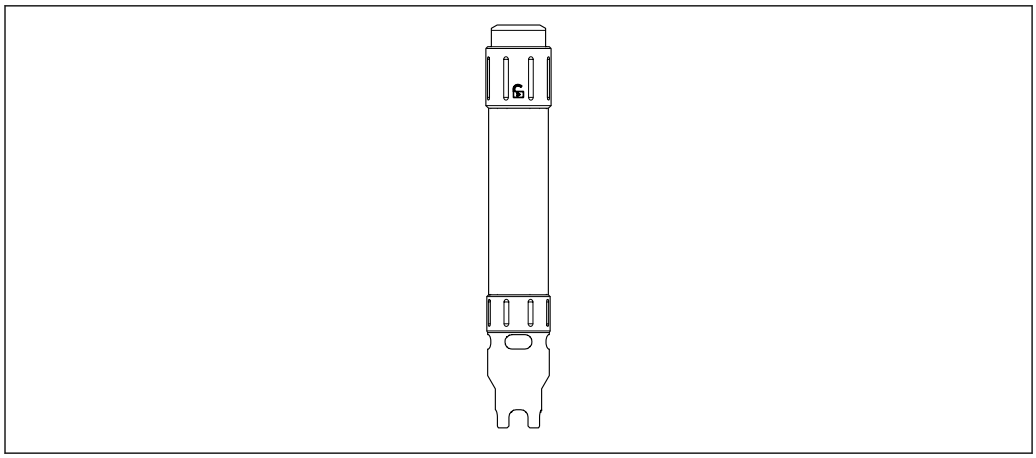

A0058337

Communication-specific accessories

M12 USB data + charging cable

Order code: 71496600
- Charging via cable
- Data backup
- Live data transfer

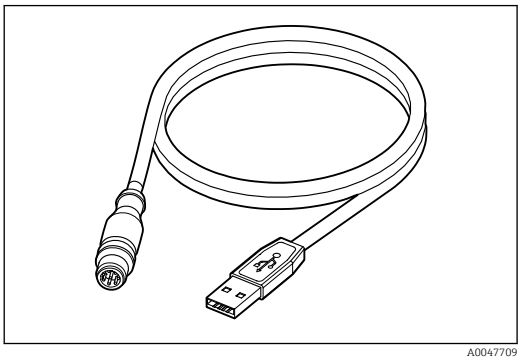

A0047709

M12-Memosens measuring cable

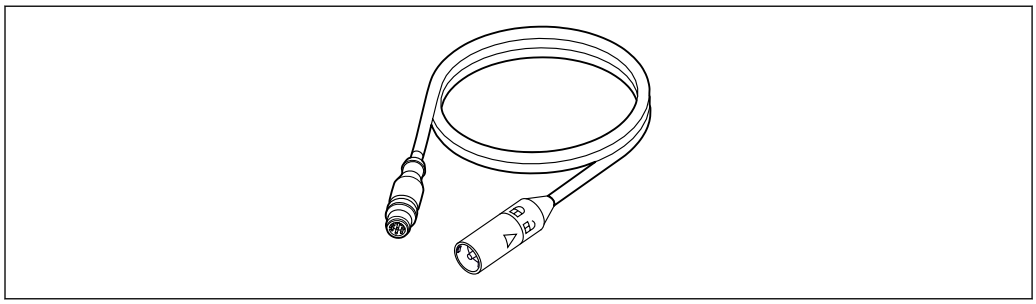

A0057814

Memosens laboratory cable CYK20
- For digital sensors with Memosens technology

Memosens data cable CYK10
- For digital sensors with Memosens technology

Technical Information TI00118C



Endress+Hauser

People for Process Automation

Consultas y ventas: AQUAREP · www.aquarep.com.ar · info@aquarep.com.ar · WhatsApp +54 9 11 6091-0087