Technical Information
Condumax CLS21D/CLS21

Conductivity sensors, analog or digital with Memosens technology



Cell constant k = 1.0 cm^{-1}

Application

Measurement in media with average or high conductivity:
- Separation of media with average conductivity (milk/water)
- Separation of media with high conductivity (alkali/water)
- Drinking water treatment
- Wastewater treatment

Sensors with temperature probes are used in conjunction with conductivity measuring devices that support automatic temperature compensation:
- Liquiline CM442/CM444/CM448 (only CLS21D)
- Liquiline CM42
- Liquiline CM14 (only CLS21D)
- Liquisys CLM223/253 (only CLS21)

The resistivity in MΩ · cm can also be measured using these transmitters.

Your benefits

- Different designs for optimum adaptation to the process or mounting location
- Installation in pipe or flow assembly
- Compact design
- With plug-in head (IP68 (CLS21D), IP65 (CLS21)) or fixed cable (IP67)
- High chemical, thermal and mechanical resistance
- Manufacturer inspection certificate stating the individual cell constant

Other advantages of Memosens technology

- Maximum process safety thanks to non-contact, inductive signal transmission
- Data security thanks to digital data transmission
- Very easy to use as sensor data saved in the sensor
- Recording of sensor load data in the sensor enables predictive maintenance

Endress+Hauser
People for Process Automation

Consultas y ventas: AQUAREP · www.aquarep.com.ar · info@aquarep.com.ar · WhatsApp +54 9 11 6091-0087

Function and system design

Measuring principle

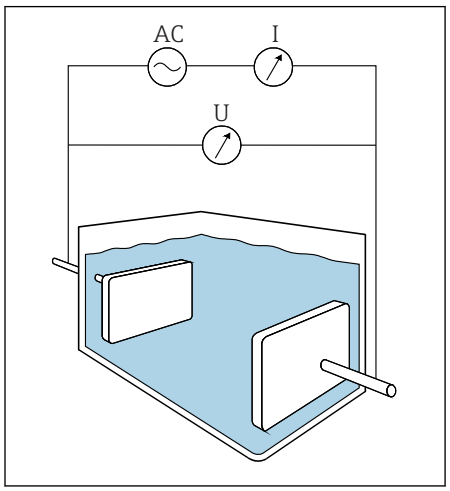

1 Conductive measurement of conductivity

AC Alternating voltage source
I Current intensity measurement
U Voltage measurement

Conductivity of liquids is determined with a measuring arrangement where two electrodes are located in the medium. An alternating voltage that causes a current to flow through the medium is applied at these electrodes. The electrical resistance, or its reciprocal value - conductance G - is calculated based on Ohm's law. The specific conductance κ is determined from the conductance value using the cell constant k, which depends on the sensor geometry.

Measuring system

A complete measuring system comprises the following components at least:
- The conductively measuring conductivity sensor CLS21D or CLS21
- A transmitter, e.g. Liquiline M CM42
- A measuring cable, e.g. Memosens data cable CYK10 or CYK71 for analog sensors

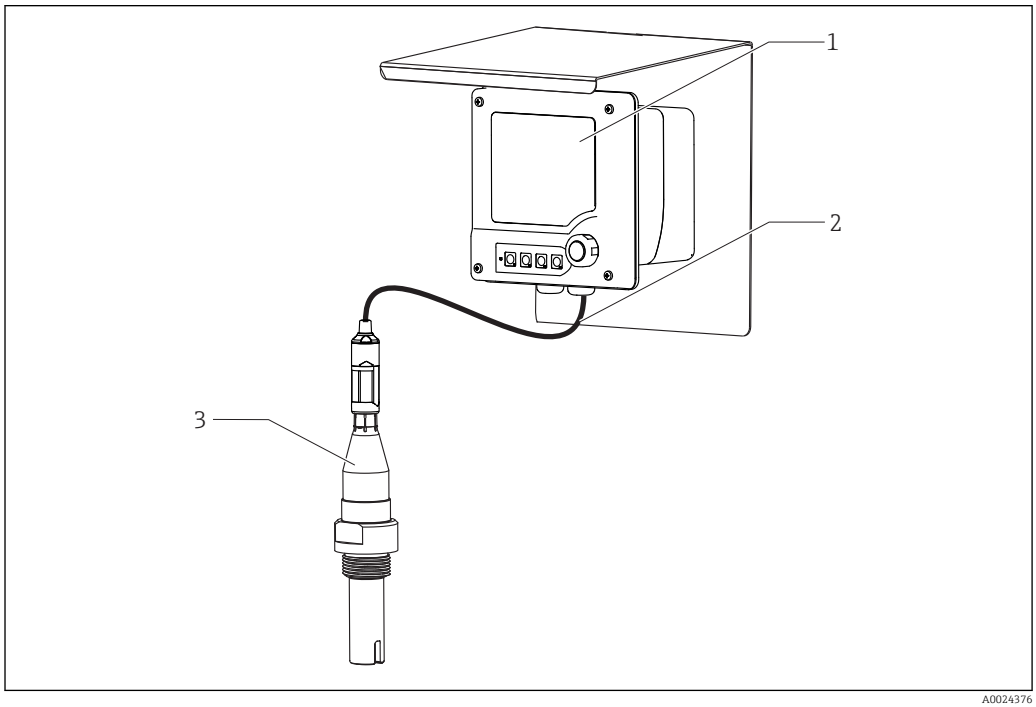

2 Example of a measuring system (with Memosens sensor)

1 Liquiline M CM42 transmitter
2 Memosens data cable
3 Condumax CLS21D

Communication and data processing (only CLS21D)

Communication with the transmitter

Always connect digital sensors with Memosens technology to a transmitter with Memosens technology. Data transmission to a transmitter for analog sensors is not possible.

Digital sensors can store measuring system data in the sensor. These include the following:
- Manufacturer data
  - Serial number
  - Order code
  - Date of manufacture
- Calibration data
  - Calibration date
  - Cell constant
  - Delta cell constant
  - Number of calibrations
  - Serial number of the transmitter used to perform the last calibration
- Operating data
  - Temperature application range
  - Conductivity application range
  - Date of initial commissioning
  - Maximum temperature value
  - Hours of operation at high temperatures

Dependability (only CLS21D)

Reliability

Memosens technology digitizes the measured values in the sensor and transmits the data to the transmitter using a non-contact connection that is free from potential interference. The result:
- Automatic error message if sensor fails or connection between sensor and transmitter is interrupted
- Immediate error detection increases measuring point availability

Maintainability

Easy handling
Sensors with Memosens technology have integrated electronics that store calibration data and other information (such as total hours of operation and operating hours under extreme measuring conditions). Once the sensor has been connected, the sensor data are transferred automatically to the transmitter and used to calculate the current measured value. As the calibration data are stored in the sensor, the sensor can be calibrated and adjusted independently of the measuring point. The result:
- Easy calibration in the measuring lab under optimum external conditions increases the quality of the calibration.
- Pre-calibrated sensors can be replaced quickly and easily, resulting in a dramatic increase in the availability of the measuring point .
- Maintenance intervals can be defined based on all stored sensor load and calibration data and predictive maintenance is possible.
- The sensor history can be documented on external data carriers and in evaluation programs. Thus, the current application of the sensors can be made to depend on their previous history.

Integrity

With inductive transmission of the measured value using a non-contact connection, Memosens guarantees maximum process safety and offers the following benefits:
- All problems caused by moisture are eliminated.
  - Plug-in connection remains free from corrosion
  - Measured value distortion from moisture is not possible.
  - The plug-in system can even be connected under water.
- The transmitter is galvanically decoupled from the medium.
- EMC safety is guaranteed by screening measures for the digital transmission of measured values.

Input

Measured values

- Conductivity
- Temperature

Measuring ranges

Conductivity	(in relation to water at 25 °C (77 °F))
CLS21D / CLS21	10 µS/cm to 20 mS/cm
Temperature	
CLS21D	-20 to 100 °C (-4 to 212 °F)
CLS21	-20 to 135 °C (-4 to 275 °F)

Cell constant

CLS21D / CLS21: k = 1.0 cm^{-1}, nominal

Temperature compensation

NTC 30K (CLS21D)

Pt100 (Class B as per IEC 60751) (CLS21)

Power supply

Electrical connection

CLS21D

The electrical connection simulator to the transmitter is established using measuring cable CYK10.

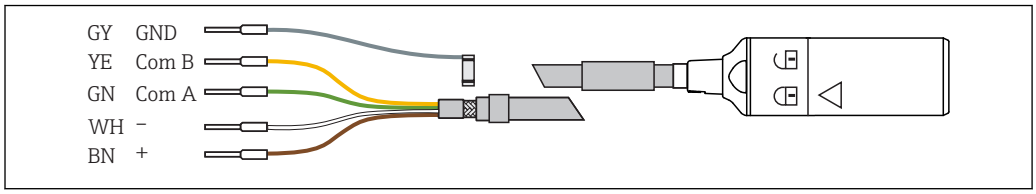

3 Measuring cable CYK10

CLS21

The sensor is connected via the fixed cable or the CYK71 measuring cable with shield. The wiring diagram is provided in the Operating Instructions of the transmitter used.

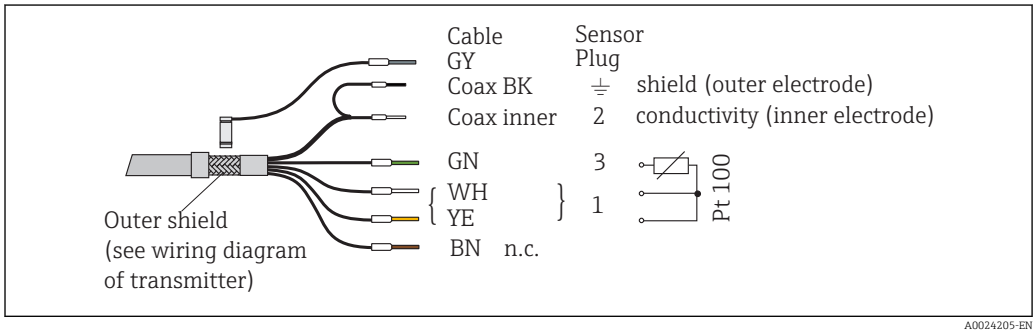

4 Measuring cable CYK71

A compatible cable connector is included in the delivery for the plug-in head versions. You must terminate the CYK71 cable (not included in the delivery) with the cable connector at the sensor end according to the connection diagram above.

A VMB junction box and another CYK71 cable are required for the cable extension.

Performance characteristics, general

Uncertainty of measurement

Each individual sensor is factory-measured in a solution of approx. 5 mS/cm (CLS21D) or approx. 500 µS/cm (CLS21) using a reference measuring system traceable to NIST or PTB. The exact cell constant is entered into the manufacturer inspection certificate supplied. The uncertainty of measurement in determining the cell constant is 1.0 %.

Performance characteristics (only CLS21D)

Response time	Conductivity	$t_{95} \leq 3$ s
	Temperature	$t_{90} \leq 296$ s
Maximum measured error	5% of reading	
Repeatability	0.2% of reading	

Installation

Installation instructions

The sensors are installed directly via the process connection. As an option, the sensor can also be installed via a flow assembly (see "Accessories").

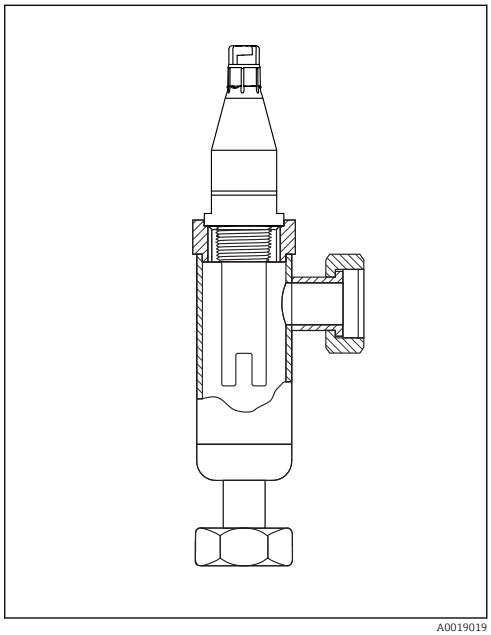

5 Installation in flow assembly CLA751

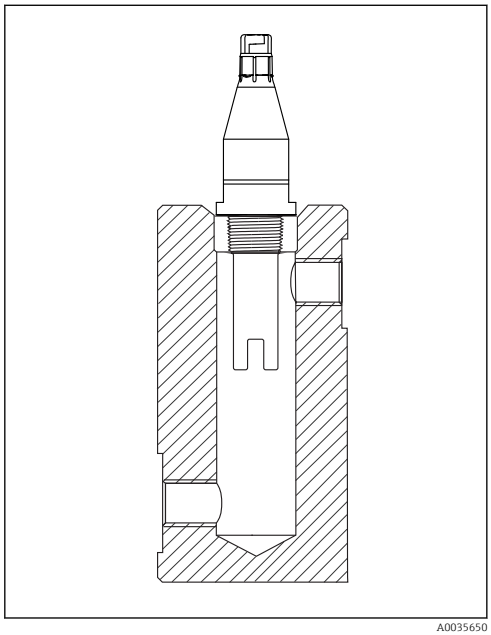

6 Installation in flow assembly CLA752

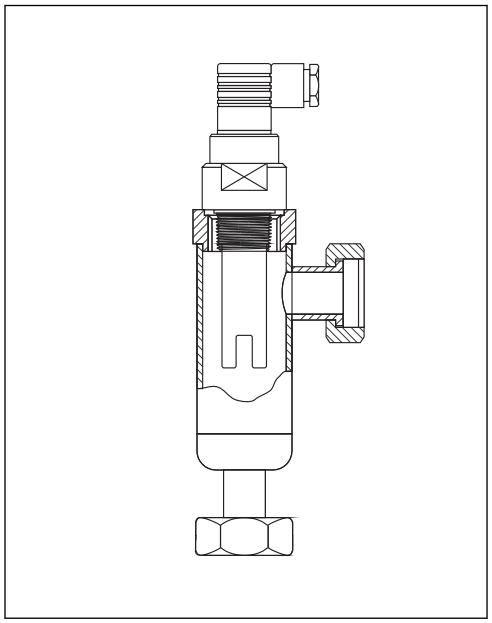

7 Installation in flow assembly CLA751

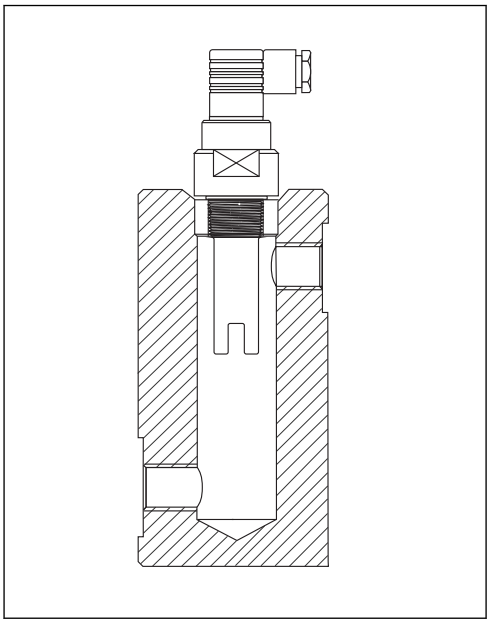

8 Installation in flow assembly CLA752

The Dipfit CLA111 immersion assembly is available to install sensors with a G1 thread in vessels (see Accessories).

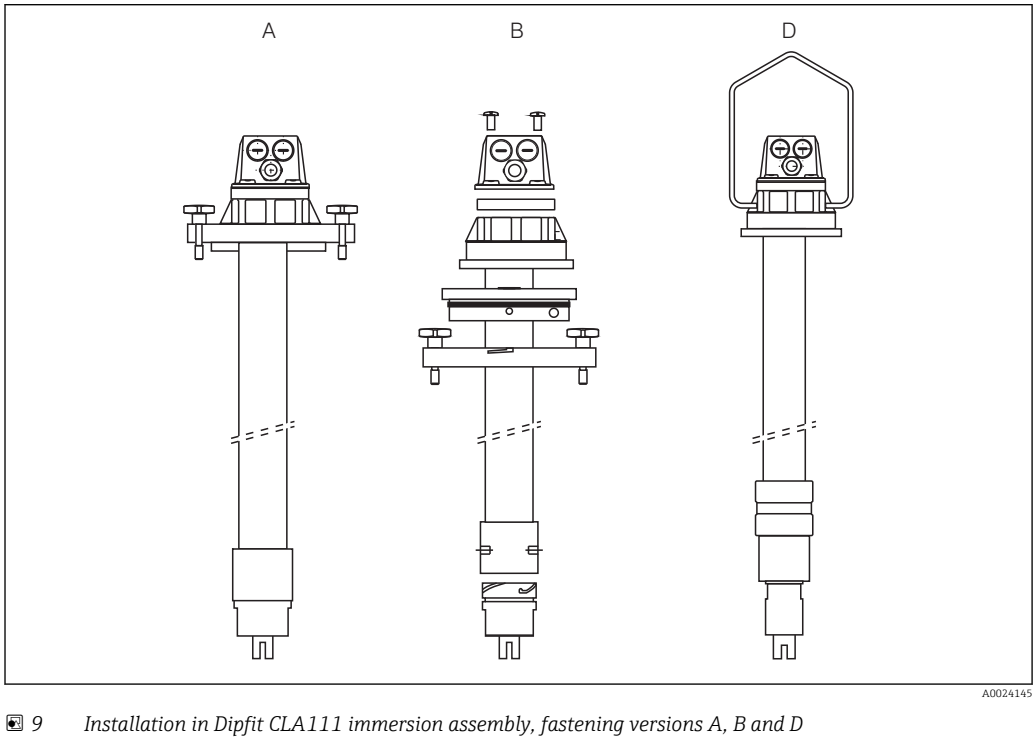

9 Installation in Dipfit CLA111 immersion assembly, fastening versions A, B and D

Environment

Ambient temperature	-20 to +60 °C (-4 to 140 °F)	
Storage temperature	-25 to +80 °C (-10 to +180 °F)	
Humidity	5 to 95 %	
Degree of protection	CLS21D	IP 68 / NEMA type 6P (1 m water column, 25 °C, 24 h)
	CLS21	
	Fixed cable version	IP 67 / NEMA 6
	Plug-in head version	IP 65 / NEMA 4X

Process

Process temperature	**CLS21D**	-20 to 135 °C (-4 to 275 °F) at 3.5 bar (50 psi) absolute
	CLS21	
	Threaded version with fixed cable	-20 to 100 °C (-4 to 212 °F)
	Version with plug-in head, Clamp version	-20 to 135 °C (-4 to 275 °F) at 3.5 bar (50 psi) absolute

The maximum temperature for communication with the transmitter is 130 °C (266°F) for the Memosens versions.

Process pressure (absolute)	CLS21D / CLS21	17 bar (246 psi) absolute, at 20 °C (68 °F)

Temperature-pressure ratings

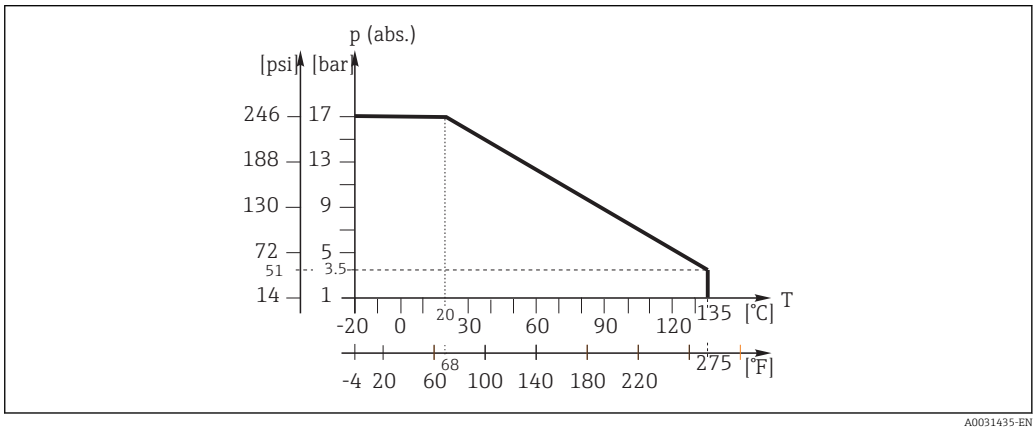

10 *Mechanical pressure-temperature resistance*

Mechanical construction

Design CLS21D

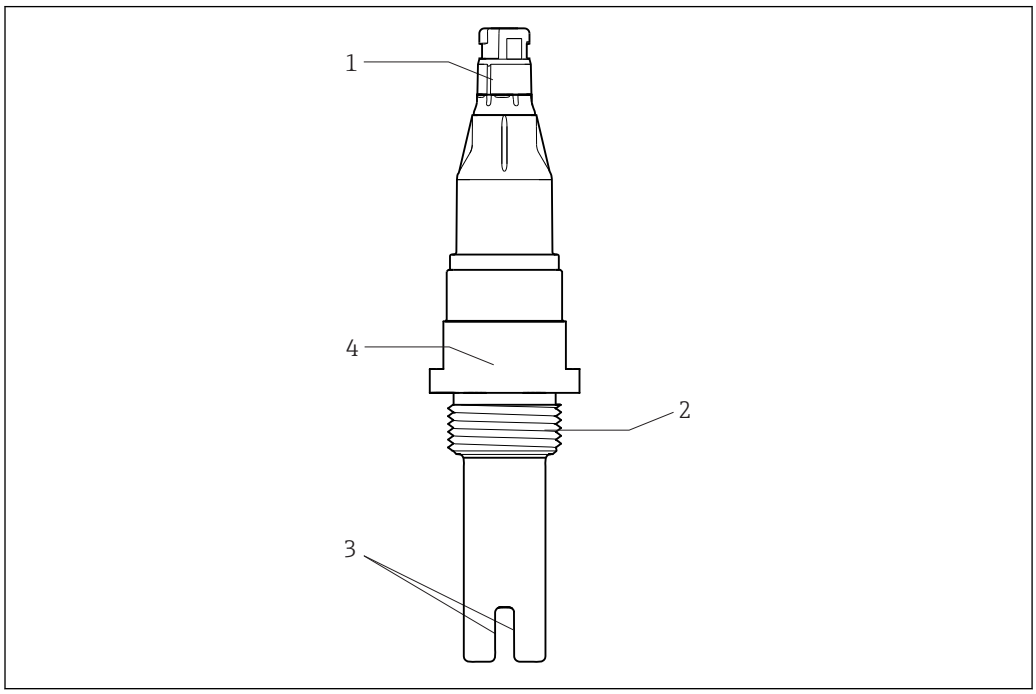

11 CLS21D

1 Memosens plug-in head
2 Process connection (here G1)
3 Coaxial measuring electrodes made of graphite
4 Wrench flats for mounting

Design CLS21

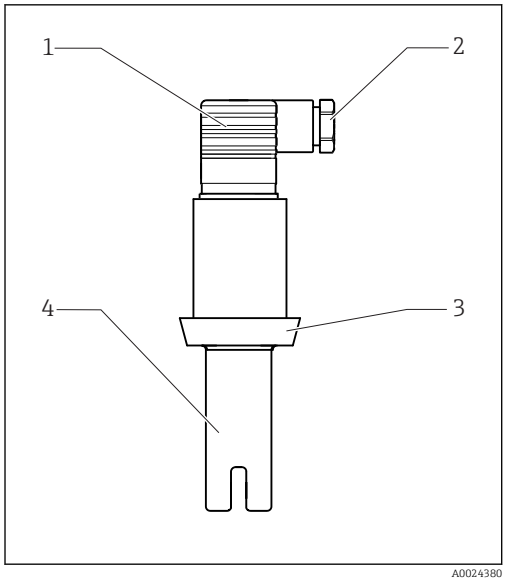

12 Design with plug-in head

1 Four-pin connector
2 Cable gland Pg9
3 Process connection (DN 40 dairy pipe)
4 Sensor shaft with measuring electrodes

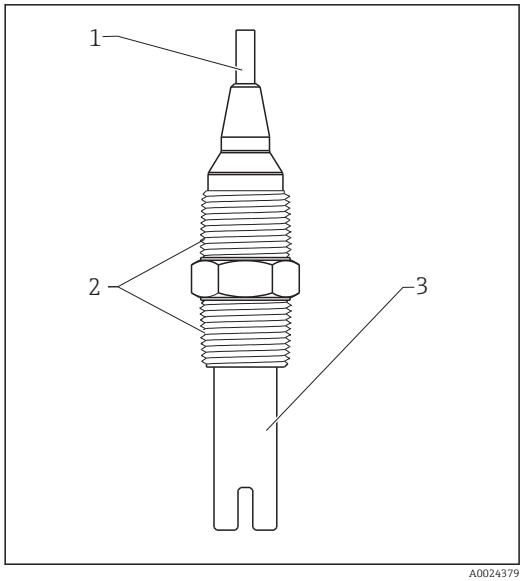

13 Design with fixed cable

1 fixed cable
2 Process connection (here NPT 1" thread)
3 Sensor shaft with measuring electrodes

Dimensions CLS21D in mm (in)

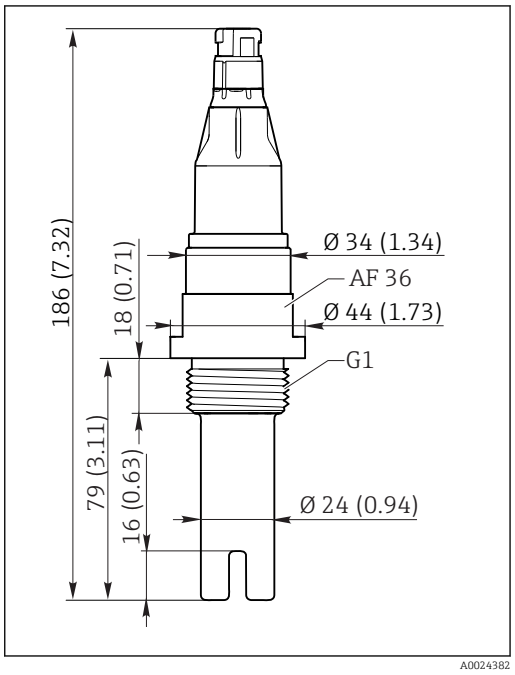

14 *Version with thread G1*

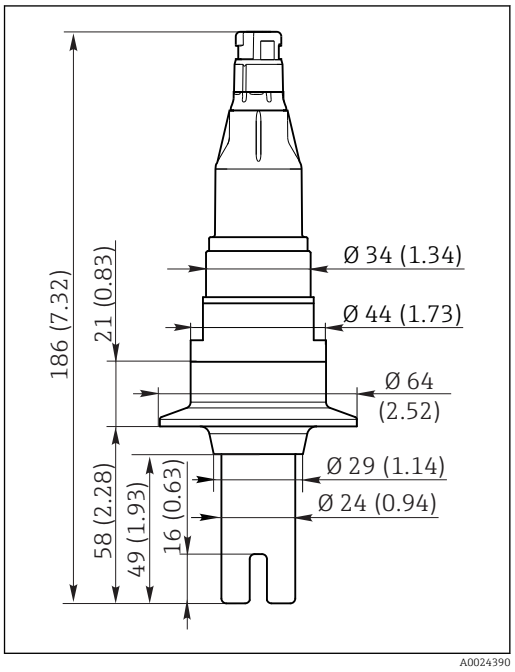

15 *Version with Clamp 2"*

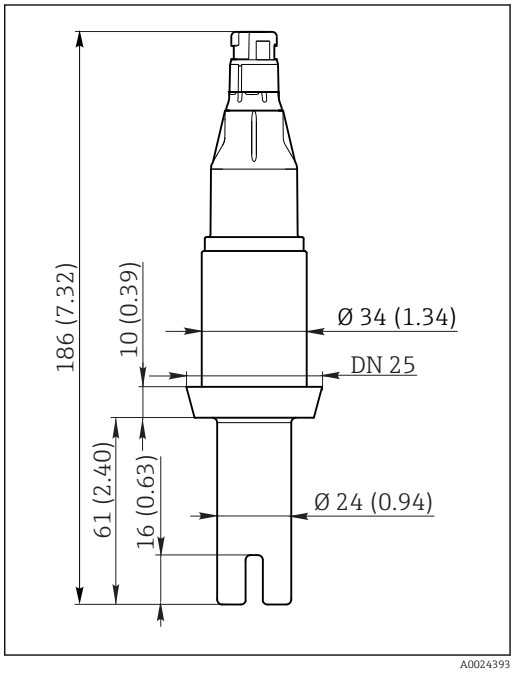

16 *Version with sanitary connection*

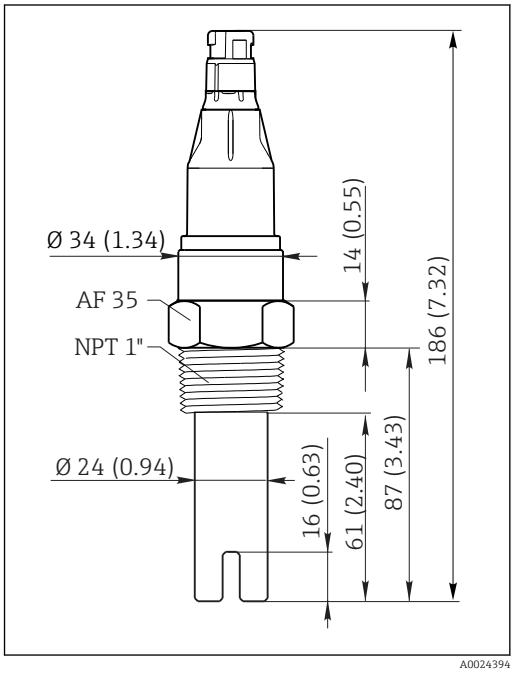

17 *Version with thread NPT 1"*

Dimensions CLS21 in mm (in)

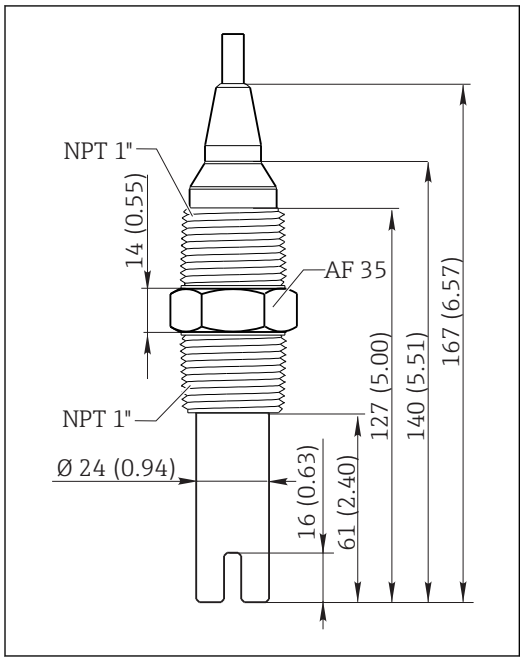

18 *Fixed cable version with NPT 1" thread*

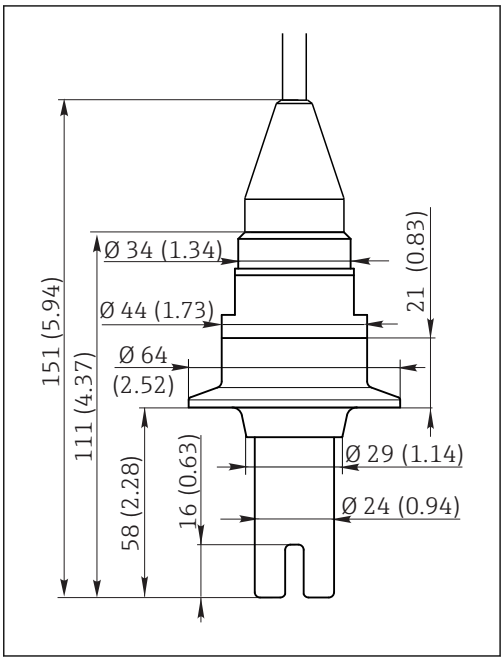

19 *Fixed cable version with Clamp 2"*

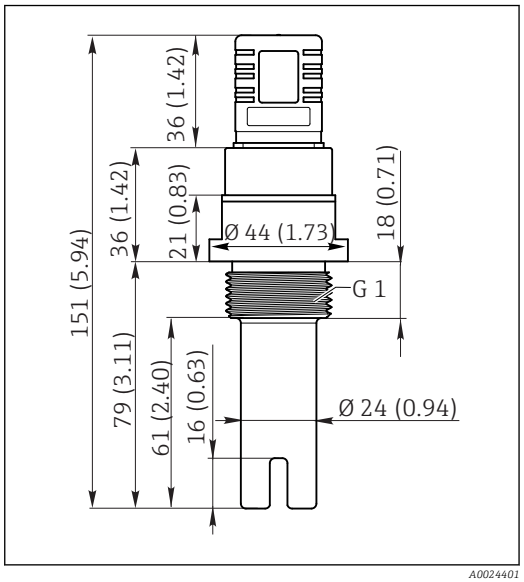

20 *Plug-in head version with G1 thread*

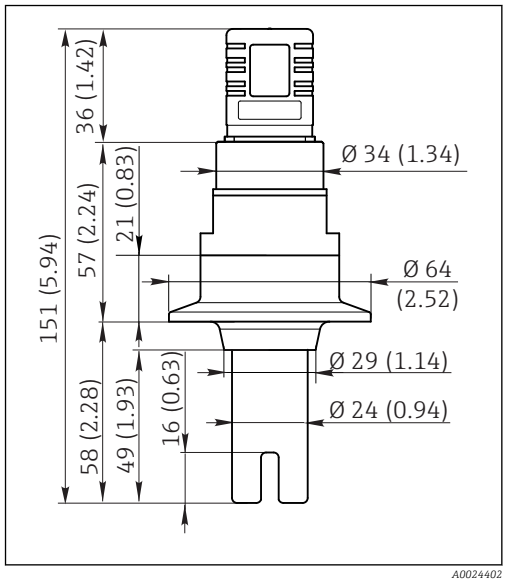

21 *Plug-in head version with Clamp 2"*

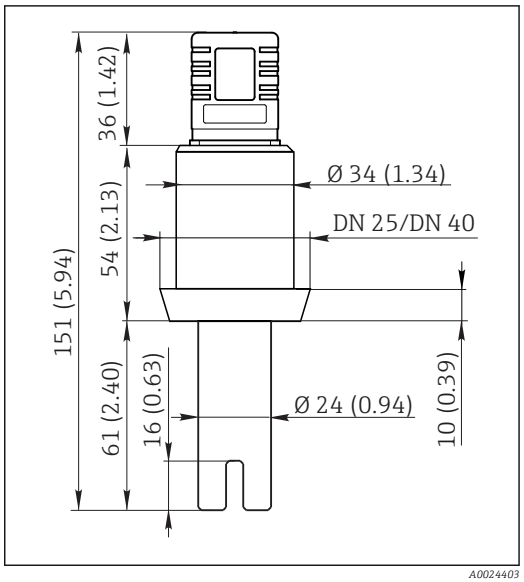

22 *Plug-in head version with sanitary connection*

Weight	Approx. 0.3 kg (0.66 lbs) depending on version	
Materials (in contact with medium)	Electrodes	Graphite
	Sensor shaft	Polyethersulfone (PES-GF20)
	Thermal conductivity socket for temperature probe	Titanium 3.7035
	Clamp process connection	
	▪ Process connection	▪ Stainless steel 1.4435
	▪ Seal	▪ EPDM
Process connections	Thread G1 NPT 1" thread Clamp 2" as per ISO 2852 Sanitary connection DN 25 and DN 40 as per DIN 11851	

Certificates and approvals

CE mark

Declaration of Conformity

The product meets the requirements of the harmonized European standards. As such, it complies with the legal specifications of the EU directives. The manufacturer confirms successful testing of the product by affixing to it the CE mark.

Ex approvals

CLS21D-G**

ATEX / NEPSI II 1G Ex ia IIC T3/T4/T6 Ga, IECEx Ex ia IIC T3/T4/T6 Ga

CLS21D-O**

CLS21D-V**

ATEX/NEPSI II 3G Ex ic IIC T3/T4/T6 Gc for use in Zone 2 with Liquiline M CM42-KV*** transmitter

CLS21

ATEX II 1G Ex ia IIC T3/T4/T6 Ga

- EAC Ex, 0Ex ia IIC T6/T4/T3 Ga X
- Zone 0
- Certificate number: TC RU C-DE.AA87.B.00088
- The product has been certified in accordance with Directive TR CU 012/2011 which applies in the European Economic Area (EEA). The EAC conformity mark has been affixed to the product.

ATEX and FM/CSA versions of digital sensors with Memosens technology are indicated by an orange-red ring in the plug-in head (sensors for zone 0) or a white-gray axial ring (sensors for zone 2).

Manufacturer inspection certificate

Stating the individual cell constant

Ordering information

Product page

Product Configurator

On the product page there is a "Configure" button to the right of the product image **Configure**.

1. Click this button.
   ↳ The Configurator opens in a separate window.
2. Select all the options to configure the device in line with your requirements.
   ↳ In this way, you receive a valid and complete order code for the device.
3. Export the order code as a PDF or Excel file. To do so, click the appropriate button on the right above the selection window.

For many products you also have the option of downloading CAD or 2D drawings of the selected product version. Click the tab for this **CAD** and select the desired file type using picklists.

Scope of delivery

The scope of delivery includes:
- Sensor in the version ordered
- Cable connector, for connecting to CYK71 measuring cable (only for plug-in head versions CLS21)
- Operating Instructions

Accessories

The following are the most important accessories available at the time this documentation was issued.

▶ For accessories not listed here, please contact your Service or Sales Center.

Assemblies

Dipfit CLA111
- Immersion assembly for open and closed vessels with flange DN 100

Technical Information TI00135C

Flow assembly CLA751
- For installing conductivity sensors with G1 thread (CLS12, CLS13, CLS21, CLS30)
- Inlet (below) and outlet (lateral) DN 20 with G1 thread adapter nut
- Stainless steel 1.4571 (AISI 316Ti)
- Max. temperature 160 °C (320 °F), max. pressure 12 bar (174 psi)
- Order No. 50004201

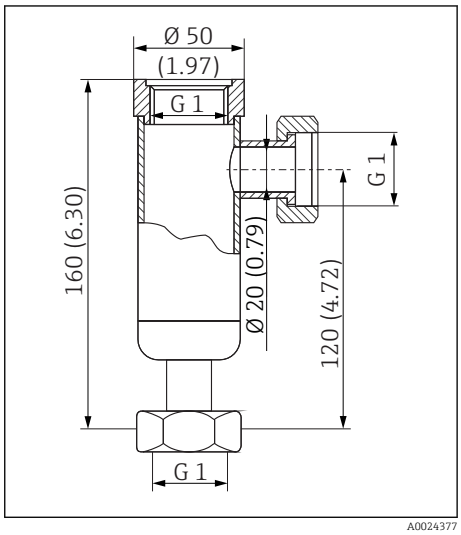

23 Dimensions in mm (inch)

Flow assembly CLA752
- For installing conductivity sensors with G1 thread (CLS12, CLS13, CLS21, CLS30)
- Inlet (lateral) and outlet (lateral) DN 20 with G½ internal thread
- Polypropylene (PP)
- Max. temperature 90 °C (194 °F), max. pressure 6 bar (87 psi)
- Order No. 50033772

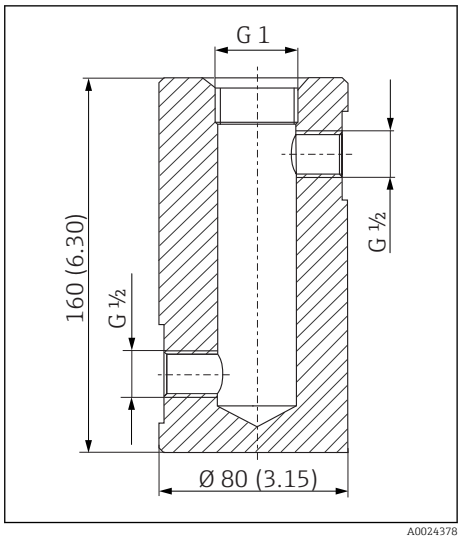

24 Dimensions in mm (inch)

Measuring cable

CYK10 Memosens data cable
- For digital sensors with Memosens technology

Technical Information TI00118C

Memosens data cable CYK11
- Extension cable for digital sensors with Memosens protocol

Technical Information TI00118C

Measuring cable CYK71
- Unterminated cable for connecting analog sensors and for extending sensor cables
- Sold by the meter, order numbers:
  - Non-Ex version, black: 50085333
  - Ex-version, blue: 50085673

Junction boxes (only CLS21)

VBM
- Junction box for cable extension
- 10 terminal strips
- Cable entries: 2 x Pg 13.5 or 2 x NPT ½"
- Material: aluminum
- Degree of protection: IP 65
- Order numbers
  - Cable entries Pg 13.5 : 50003987
  - Cable entries NPT ½": 51500177

VBM-Ex
- Junction box for cable extension in hazardous area
- 10 terminal strips (blue)
- Cable entries: 2 x Pg 13.5
- Material: aluminum
- Degree of protection: IP 65 (≙ NEMA 4X)
- Order number: 50003991

Calibration solutions

Conductivity calibration solutions CLY11
Precision solutions referenced to SRM (Standard Reference Material) by NIST for qualified calibration of conductivity measuring systems in accordance with ISO 9000
- CLY11-A, 74 µS/cm (reference temperature 25 °C (77 °F)), 500 ml (16.9 fl.oz) Order No. 50081902
- CLY11-B, 149.6 µS/cm (reference temperature 25 °C (77 °F)), 500 ml (16.9 fl.oz) Order No. 50081903
- CLY11-C, 1.406 mS/cm (reference temperature 25 °C (77 °F)), 500 ml (16.9 fl.oz) Order No. 50081904
- CLY11-D, 12.64 mS/cm (reference temperature 25 °C (77 °F)), 500 ml (16.9 fl.oz) Order No. 50081905

Technical Information TI00162C

Endress+Hauser

People for Process Automation

Consultas y ventas: AQUAREP · www.aquarep.com.ar · info@aquarep.com.ar · WhatsApp +54 9 11 6091-0087