Technical Information
Condumax CLS15D/CLS15

Conductivity sensors, analog or digital with Memosens technology



Cell constant k = 0.01 cm^{-1} or k = 0.1 cm^{-1}

Application

Measurement in pure and ultrapure water range:
- Monitoring of ion exchangers
- Reverse osmosis
- Distillation
- Chip cleaning

Sensors with temperature probes are used in conjunction with conductivity measuring devices that support automatic temperature compensation:
- Liquiline CM442/CM444/CM448 (only CLS15D)
- Liquiline CM42
- Liquiline CM14 (only CLS15D)
- Liquisys CLM223/253 (only CLS15)
- Mycom CLM153 (only CLS15)

The resistivity in MΩ · cm can also be measured using these transmitters.

Your benefits

- High measuring accuracy as cell constant is individually measured
- Installation in pipe or flow assembly
- Compact design
- With plug-in head (IP68 (CLS15D), IP67 (CLS21)) or fixed cable (IP67)
- Easy to clean thanks to electropolished surfaces
- Sterilizable up to 140 °C (284 °F)
- Stainless steel 1.4435 (AISI 316L)
- Quality certificate stating the individual cell constant
- Inspection certificate EN 10204 3.1 (optional)

Other advantages of Memosens technology

- Maximum process safety owing to non-contact, inductive signal transmission
- Data security thanks to digital data transmission
- Very easy to use as sensor data saved in the sensor
- Predictive maintenance possible as sensor load data logged in the sensor

Endress+Hauser
People for Process Automation

Consultas y ventas: AQUAREP · www.aquarep.com.ar · info@aquarep.com.ar · WhatsApp +54 9 11 6091-0087

Function and system design

Measuring principle

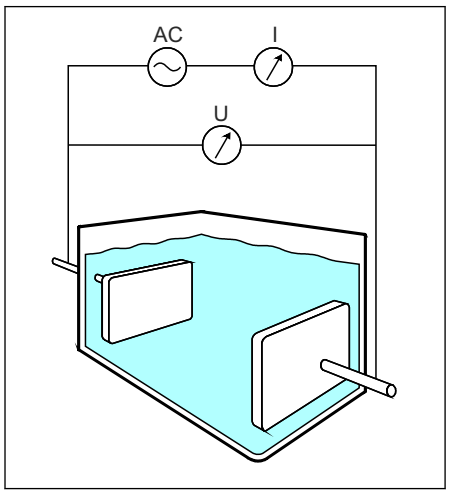

A0024260

1 Conductive measurement of conductivity

AC Alternating voltage source
I Current intensity measurement
U Voltage measurement

Conductivity of liquids is determined with a measuring arrangement where two electrodes are located in the medium. An alternating voltage that causes a current to flow through the medium is applied at these electrodes. The electrical resistance, or its reciprocal value - conductance G - is calculated based on Ohm's law. The specific conductance κ is determined from the conductance value using the cell constant k, which depends on the sensor geometry.

Measuring system

A complete measuring system comprises the following components at least:
- The conductively measuring conductivity sensor CLS15D or CLS15
- A transmitter, e.g. Liquiline M CM42
- A measuring cable, e.g. Memosens data cable CYK10 or CYK71 for analog sensors

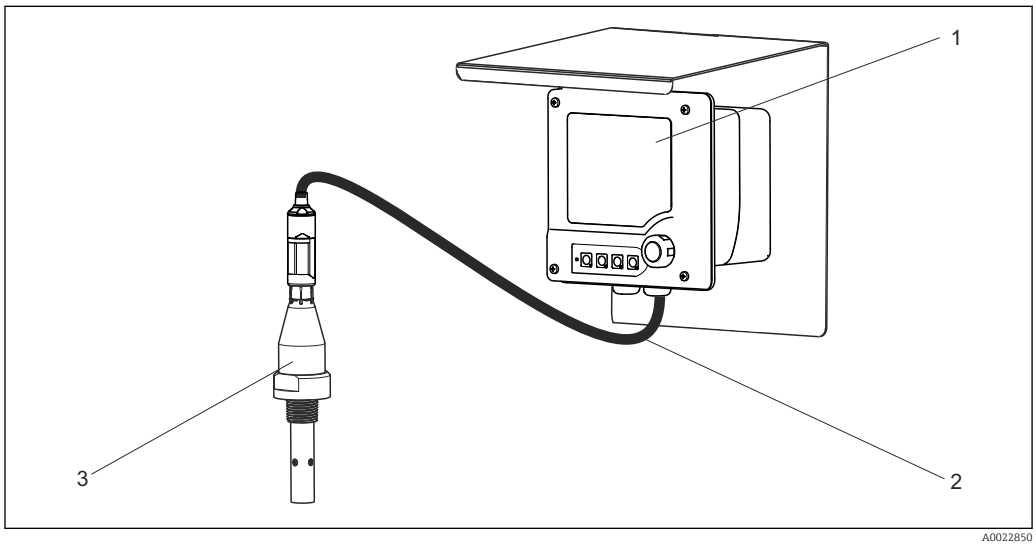

A0022850

2 Example of a measuring system (with Memosens sensor)

1 Liquiline M CM42 transmitter
2 Memosens data cable
3 Condumax CLS15D

Communication and data processing (only CLS15D)

Communication with the transmitter

Always connect digital sensors with Memosens technology to a transmitter with Memosens technology. Data transmission to a transmitter for analog sensors is not possible.

Digital sensors are able to store the following system data in the sensor
- Manufacturing data
  - Serial number
  - Order code
  - Date of manufacture
- Calibration data
  - Calibration date
  - Cell constant
  - Delta cell constant
  - Number of calibrations
  - Serial number of the transmitter used for the last calibration
- Application data
  - Temperature application range
  - Conductivity application range
  - Date of first commissioning
  - Maximum temperature value
  - Hours of operation at high temperatures

Dependability (only CLS15D)

Reliability

Memosens technology digitizes the measured values in the sensor and transmits the data to the transmitter using a non-contact connection that is free from potential interference. The result:
- Automatic error message if sensor fails or connection between sensor and transmitter is interrupted
- Immediate error detection increases measuring point availability

Maintainability

Easy handling
Sensors with Memosens technology have integrated electronics that allow for saving calibration data and further information such as total hours of operation and operating hours under extreme measuring conditions. Once the sensor has been connected, the sensor data are transferred automatically to the transmitter and used to calculate the current measured value. As the calibration data are stored in the sensor, the sensor can be calibrated and adjusted independently of the measuring point. The result:
- Easy calibration in the measuring lab under optimum external conditions increases the quality of the calibration.
- Pre-calibrated sensors can be replaced quickly and easily, resulting in a dramatic increase in the availability of the measuring point .
- Maintenance intervals can be defined based on all stored sensor load and calibration data and predictive maintenance is possible.
- The sensor history can be documented on external data carriers and evaluation programs at any time. Thus, the current application of the sensors can be made to depend on their previous history.

Integrity

With inductive transmission of the measured value using a non-contact connection, Memosens guarantees maximum process safety and offers the following benefits:
- All problems caused by moisture are eliminated.
  - Plug-in connection free from corrosion
  - Measured value distortion from moisture is not possible.
  - The plug-in system can even be connected under water.
- The transmitter is galvanically decoupled from the medium.
- EMC safety is guaranteed by screening measures for the digital transmission of measured values.

Input

Measured variables

- Conductivity
- Temperature

Measuring ranges

Conductivity	(in relation to water at 25 °C (77 °F))
CLS15D/CLS15-A	0.04 to 20 µS/cm
CLS15D/CLS15-B	0.10 to 200 µS/cm
Temperature	
CLS15D	-20 to 100 °C (-4 to 212 °F)
CLS15	-20 to 140 °C (-4 to 280 °F)

Cell constant

CLS15D/CLS15-A	$k = 0.01\ cm^{-1}$
CLS15D/CLS15-B	$k = 0.1\ cm^{-1}$

Temperature compensation

NTC 30K (CLS15D)

Pt 100 (class A as per IEC 60751) (CLS15)

Power supply

Electrical connection

CLS15D

The sensor is electrically connected to the transmitter via the CYK10 measuring cable.

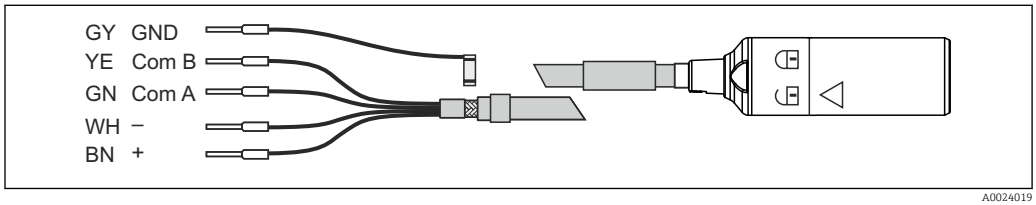

3 Measuring cable CYK10

CLS15

The sensor is connected via the fixed cable or via the CYK71 measuring cable with a shield. The wiring diagram is provided in the Operating Instructions of the transmitter used.

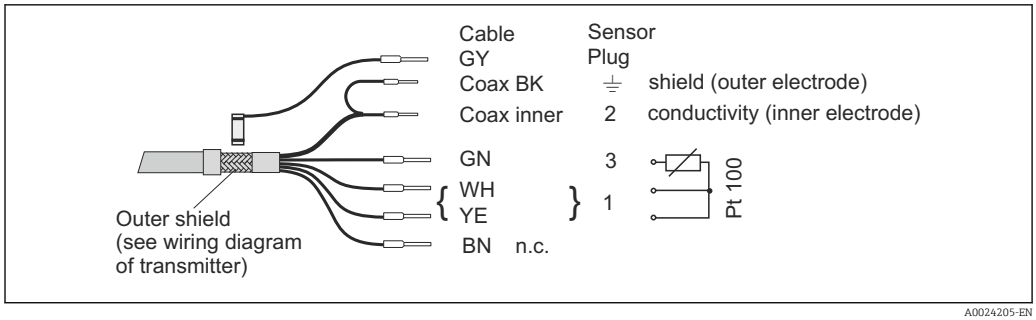

4 Measuring cable CYK71

A compatible cable connector is included in the delivery for the plug-in head versions. You must terminate the CYK71 cable (not included in the delivery) with the cable connector at the sensor end according to the connection diagram above.

A VMB junction box and another CYK71 cable are required for the cable extension.

Performance characteristics, general

Uncertainty of measurement

Each individual sensor is factory-measured in a solution of approx. 5 µS/cm for cell constant 0.01 cm^{-1} or approx. 50 µS/cm for cell constant 0.1 cm^{-1} using a reference measuring system traceable to NIST or PTB. The exact cell constant is entered into the quality certificate supplied. The uncertainty of measurement in determining the cell constant is 1.0 %.

Performance characteristics (only CLS15D)

Response time	Conductivity	$t_{95} \leq 3$ s
	Temperature	
	CLS15D-A	$t_{90} \leq 39$ s
	CLS15D-B	$t_{90} \leq 17$ s
Maximum measured error	2% of reading	
Repeatability	0.2% of reading	

Installation

Installation instructions

The sensors are installed directly via the process connection thread NPT ½" or ¾" or Clamp 1 ½". As an option, the sensor can also be installed using a commercially available T-piece or cross fitting or using a flow assembly.

CLS15D is depicted in the graphics. The analog sensor is only different in terms of its terminal head.

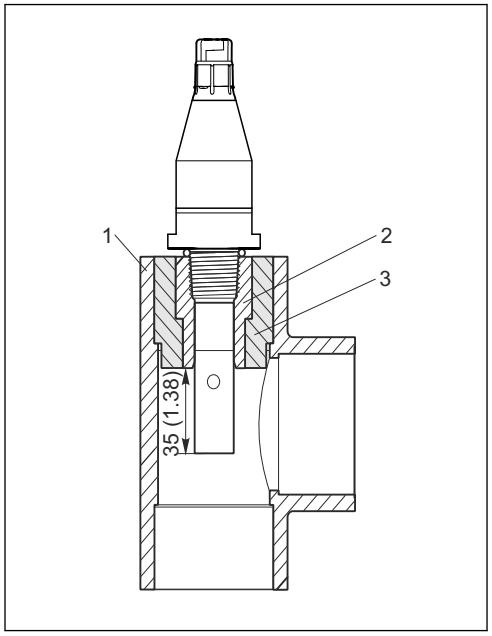

5 With NPT ½" thread in T-piece or cross fitting

1 *T-piece or cross fitting (DN 32, 40 or 50)*
2 *Glue-in VC threaded coupling (NPT ½" for DN 20, see "Accessories")*
3 *Glue-in adapter coupling (for DN 32, 40, 50, see "Accessories")*

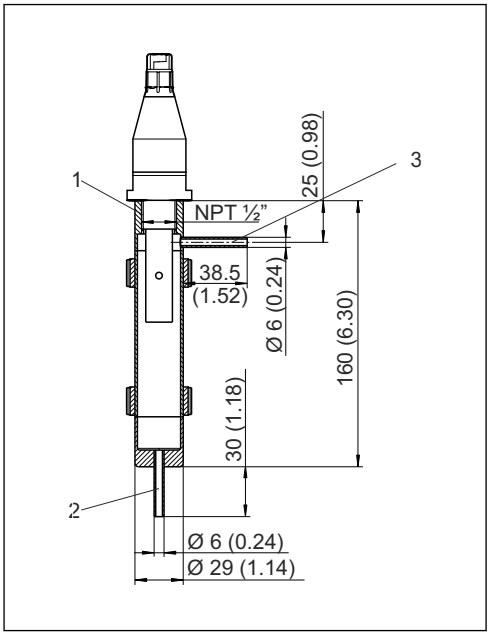

6 With NPT ½" thread in flow assembly 71042405, dimensions in mm (inch)

1 *Sensor holder NPT ½"*
2 *Inlet*
3 *Outlet*

Environment

Ambient temperature range	-20 to +60 °C (0 to 140 °F)	
Storage temperature	-25 to +80 °C (-10 to +180 °F)	
Humidity	5 to 95 %	
Degree of protection	CLS15D	IP 68 / NEMA type 6P (1 m water column, 25 °C, 24 h)
	CLS15	IP 67 / NEMA 6

Process

Process temperature

Threaded version with fixed cable	-20 to 100 °C (-4 to 212 °F)
Threaded version with plug-in head, Clamp version	
Normal operation	-20 to 120 °C (-4 to 248 °F)
Sterilization (max. 1 h) [1]	max. 140 °C (284 °F)

1) Threaded versions: max. 30 minutes

The maximum temperature for communication with the transmitter is 130 °C (266°F) for the Memosens versions.

Process pressure (absolute)

CLS15D/CLS15	13 bar (188 psi) at 20 °C (68 °F) 1 bar (14 psi) at 120 °C (248 °F)

Temperature-pressure ratings

CLS15D

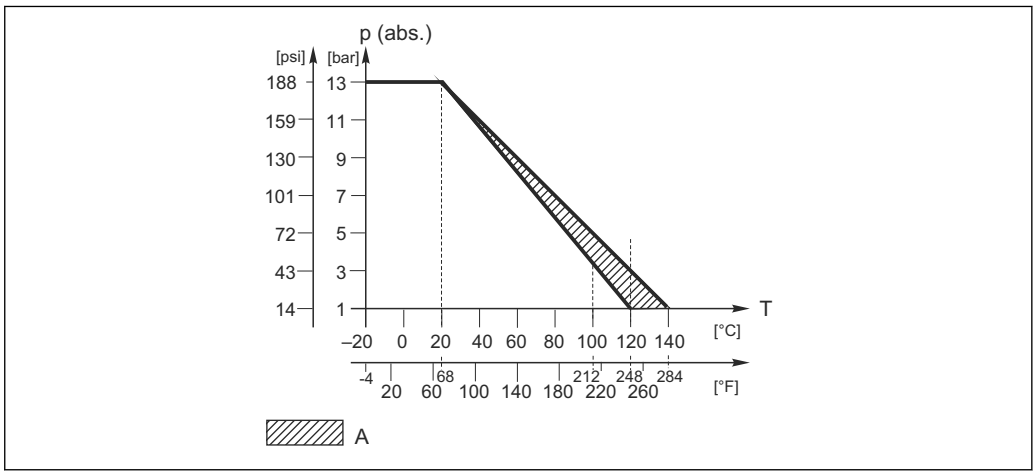

7 *Mechanical pressure-temperature resistance*

A Can be sterilized for a short time (1 hour)

CLS15

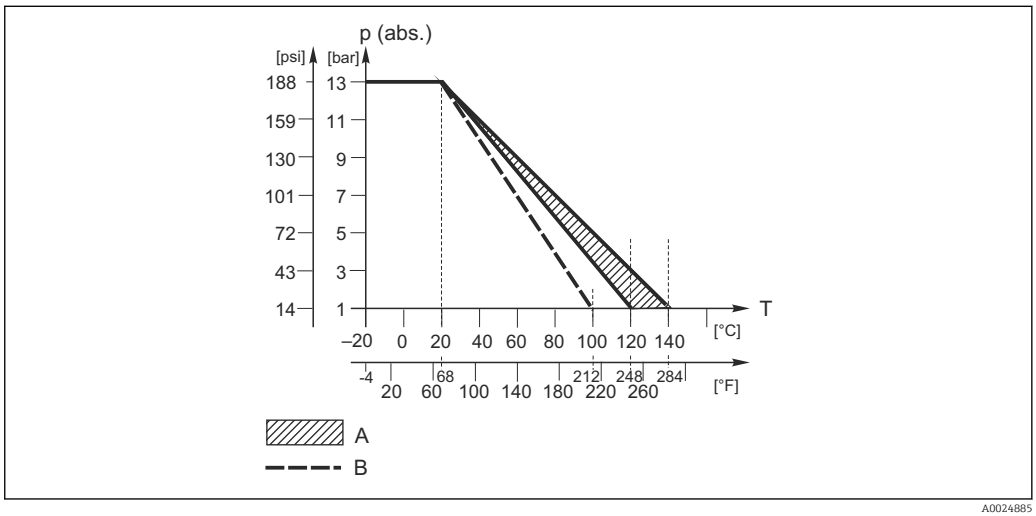

8 *Mechanical pressure-temperature resistance*

A Can be sterilized for a short time (1 hour)
B Threaded version with fixed cable

Mechanical construction

Design CLS15D

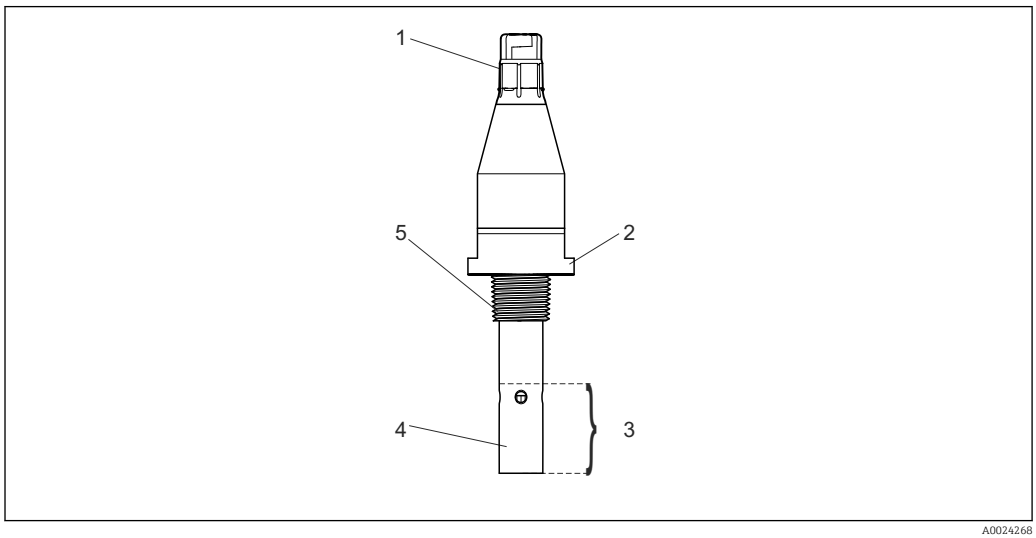

9 CLS15D

1 *Memosens plug-in head*
2 *Wrench flats for mounting*
3 *Minimum immersion depth*
4 *Coaxial measuring electrodes*
5 *Process connection (thread, clamp)*

Design CLS15

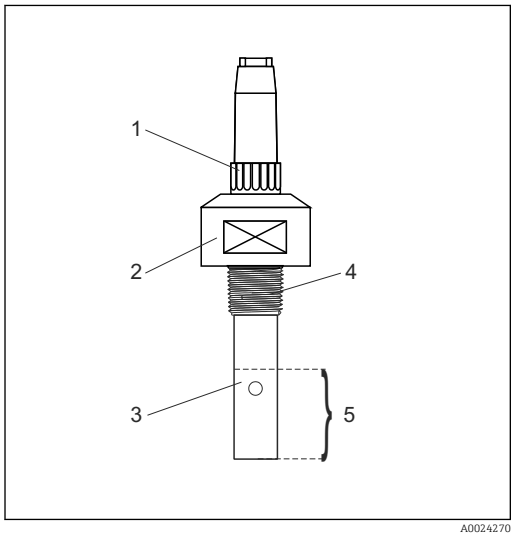

10 Design with plug-in head

1 *Cable connector*
2 *Plug-in head*
3 *Coaxial measuring electrode*
4 *Thread NPT ½"*
5 *Minimum immersion depth*

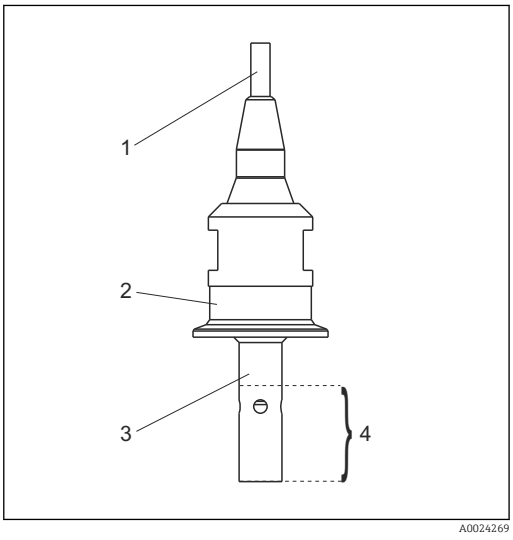

11 Design with fixed cable

1 *fixed cable*
2 *Clamp 1½"*
3 *Coaxial measuring electrode*
4 *Minimum immersion depth*

Dimensions CLS15D

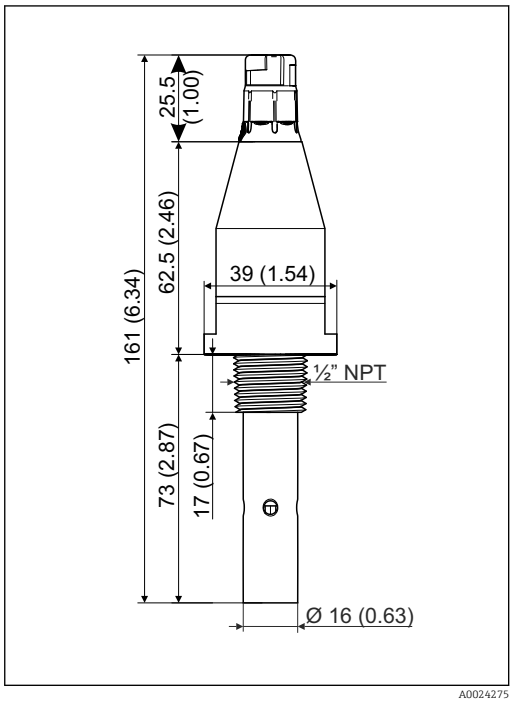

12 Version with thread

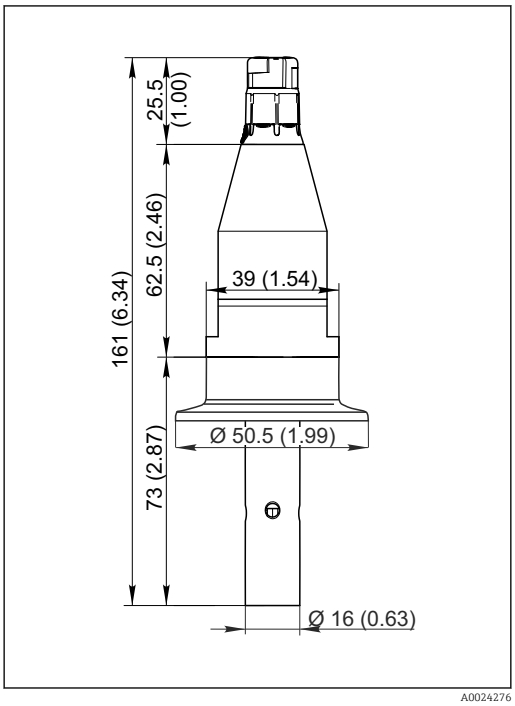

13 Version with Clamp

Measurements in mm (inch)

Dimensions CLS15

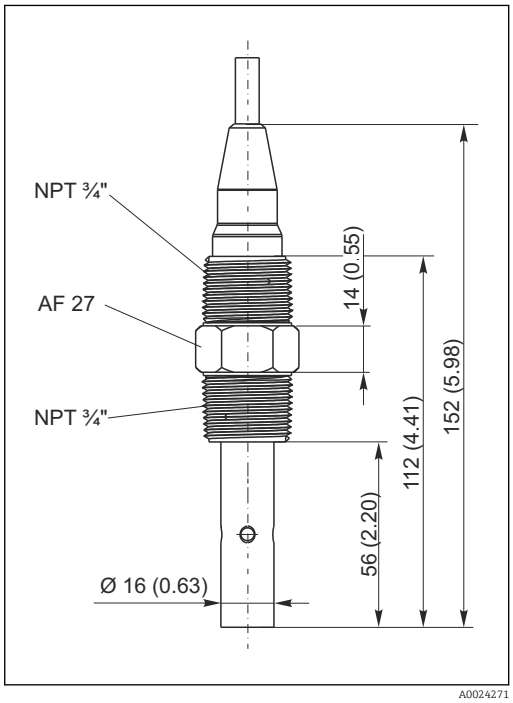

14 Fixed cable version with NPT ¾"

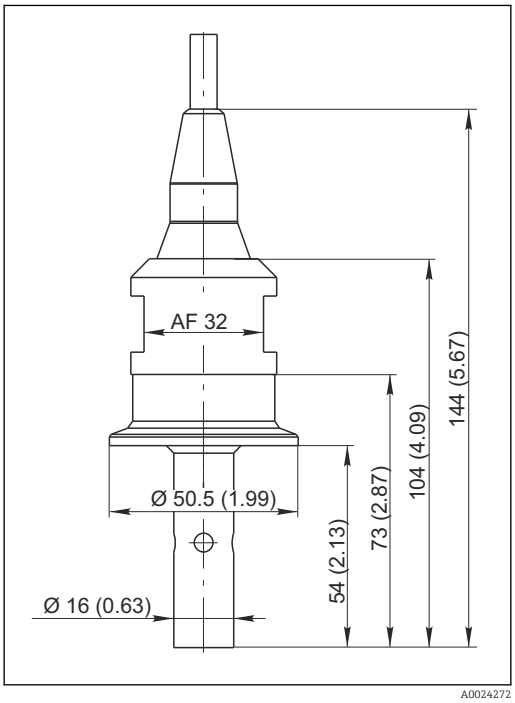

15 Fixed cable version with Clamp 1½"

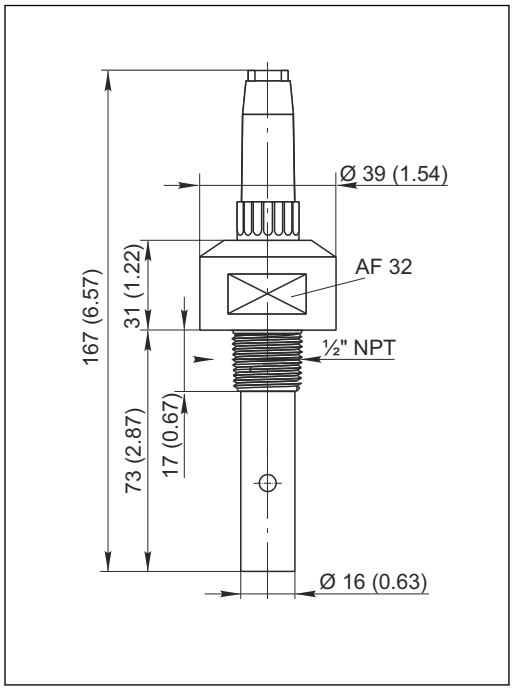

16 Plug-in head version with NPT ½"

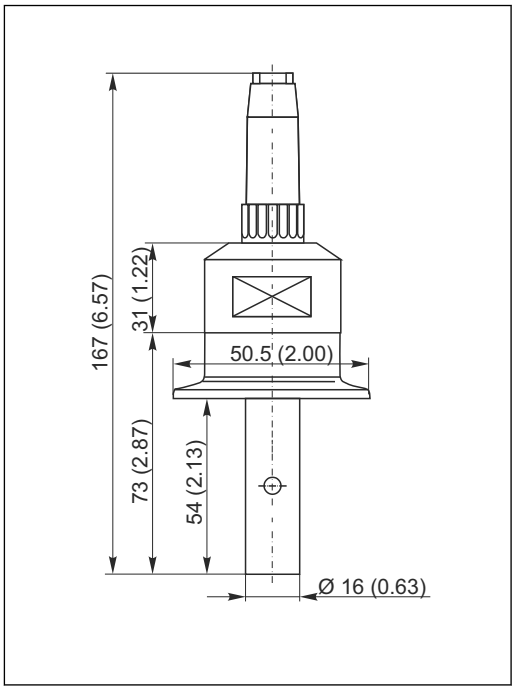

17 Plug-in head version with Clamp 1½"

Measurements in mm (inch)

Weight	Approx. 0.3 kg (0.66 lbs) depending on version	
Materials (in contact with medium)	Electrodes	Polished, stainless steel 1.4435 (AISI 316L)
	Sensor shaft	Polyethersulfone (PES-GF20)
	O-ring, in contact with medium (only Clamp version)	EPDM
Process connections	Thread NPT ½" and ¾" Clamp 1½" as per ISO 2852	
Surface roughness	$R_a \leq 0.8$ µm	

Certificates and approvals

CE mark

Declaration of Conformity

The product meets the requirements of the harmonized European standards. As such, it complies with the legal specifications of the EC directives. The manufacturer confirms successful testing of the product by affixing to it the CE mark.

Ex approvals

CLS15D-G**

ATEX / NEPSI II 1G Ex ia IIC T3/T4/T6 Ga, IECEx Ex ia IIC T3/T4/T6 Ga

CLS15D-O**

FM/CSA IS/NI Cl. I Div.1&2 Gr. A-D in conjunction with Liquiline M CM42 transmitter

CLS15D-V**

ATEX/NEPSI II 3G Ex ic IIC T3/T4/T6 Gc for use in Zone 2 with Liquiline M CM42-KV*** transmitter

CLS15

ATEX II 1G EEx ia IIC T3/T4/T6

FM/CSA IS/NI Cl. I Div.1&2 Gr. A-D in conjunction with Liquiline M CM42 transmitter

ATEX and FM/CSA versions of digital sensors with Memosens technology are indicated by a red-orange ring in the plug-in head.

Quality certificate

Stating the individual cell constant

Inspection certificate in accordance with EN 10204 3.1

A test certificate 3.1 in accordance with EN10204 is supplied depending on the version (→ Product Configurator on the product page).

Ordering information

Product page

Product Configurator

The navigation area is located on the right of the product page.

1. Under "Device support" click "Configure your selected product".
   ↳ The Configurator opens in a separate window.
2. Select all the options to configure the device in line with your requirements.
   ↳ In this way, you receive a valid and complete order code for the device.
3. Export the order code as a PDF or Excel file. To do so, click the appropriate button at the top of the screen.

Scope of delivery

The scope of delivery includes:
- Sensor in the version ordered
- Cable connector, for connecting to CYK71 measuring cable (only for plug-in head versions CLS15)
- Operating Instructions

Accessories

The following are the most important accessories available at the time this documentation was issued. For accessories not listed here, please contact your service or sales office.

Threaded and adapter couplings

For sensors with NPT ½" process connection (CLS15-/CLS15D-x1Axx)

PVC threaded coupling
- For gluing into commercially available PVC cross fittings or T-pieces with DN 20
- With G½ internal thread, self-sealing with NPT ½" sensor thread
- Order No. 50066536

PVDF threaded coupling
- With G½ internal thread and G1 external thread
- Explosion-proof up to 12 bar at 20 °C (174 psi at 68 °F), max. 120 °C at 1 bar (248 °F at 14.5 psi), including O-ring
- Self-sealing internal thread with NPT ½" sensor thread
- Order No. 50004381

PVC adapter couplings AM
- For adapting the PVC threaded coupling to larger nominal diameters
- Diameter, order numbers:
  - AM 32: for cross-fittings or T-pieces DN 32, Order No. 50004738
  - AM 40: for cross-fittings or T-pieces DN 40, Order No. 50004739
  - AM 50: for cross-fittings or T-pieces DN 50, Order No. 50004740

Flow assembly

For installing conductivity sensors with NPT ½" thread
- Material: Stainless steel 1.4404 (AISI 316 L)
- Connections: 90°, Ø 6 mm (0.24")
- Volume: 0.69 l (0.18 US gal)
- Max. temperature: 100 °C (212 °F)
- Max. pressure: 16 bar (232 psi)
- Order No.: 71042405

Measuring cable

CYK10 Memosens data cable
- For digital sensors with Memosens technology

Technical Information TI00118C

Memosens data cable CYK11
- Extension cable for digital sensors with Memosens protocol

Technical Information TI00118C

Measuring cable CYK71
- Unterminated cable for connecting analog sensors and for extending sensor cables
- Sold by the meter, order numbers:
  - Non-Ex version, black: 50085333
  - Ex-version, blue: 50085673

Junction boxes (only CLS15)

VBM
- Junction box for cable extension
- 10 terminal strips
- Cable entries: 2 x Pg 13.5 or 2 x NPT ½"
- Material: aluminum
- Degree of protection: IP 65
- Order numbers
  - Cable entries Pg 13.5 : 50003987
  - Cable entries NPT ½": 51500177

VBM-Ex
- Junction box for cable extension in hazardous area
- 10 terminal strips (blue)
- Cable entries: 2 x Pg 13.5

- Material: aluminum
- Degree of protection: IP 65 (≙ NEMA 4X)
- Order number: 50003991

Calibration solutions

Conductivity calibration solutions CLY11
Precision solutions referenced to SRM (Standard Reference Material) by NIST for qualified calibration of conductivity measuring systems in accordance with ISO 9000
- CLY11-A, 74 µS/cm (reference temperature 25 °C (77 °F)), 500 ml (16.9 fl.oz)
  Order No. 50081902
- CLY11-B, 149.6 µS/cm (reference temperature 25 °C (77 °F)), 500 ml (16.9 fl.oz)
  Order No. 50081903

Technical Information TI00162C

Calibration set

Conducal CLY421
- Conductivity calibration set (case) for ultrapure water applications
- Complete, factory-calibrated measuring system with certificate, traceable to SRM by NIST and PTB, for comparison measurement in ultrapure water up to max. 20 µS/cm

Technical Information TI00496C/07/EN

Endress+Hauser

People for Process Automation

Consultas y ventas: AQUAREP · www.aquarep.com.ar · info@aquarep.com.ar · WhatsApp +54 9 11 6091-0087