TI01768C/07/EN/02.26-00
71753448
2026-01-07

Technical Information
Memosens CCS51E

Digital sensor with Memosens technology for determining free chlorine



Application

The Memosens CCS51E sensor for free chlorine is suitable for a wide range of water qualities:
- Drinking water - to ensure adequate disinfection without overdosing
- Utilities - to detect free chlorine and prevent damage
- Process water - for hygienic packaging and bottling of food and beverages
- Swimming pools - to dose the disinfectant as efficiently as possible

Your benefits

- Low-maintenance amperometric sensor reduces the measuring point's operating costs, particularly compared with colorimetric measurement determination.
- Thanks to Memosens 2.0 technology, the sensor can be precalibrated and easily incorporated in the process using plug-and-play technology. This, together with the faster polarization time, ensures high plant availability.
- Rapid response time (T_{90} < 25 s) enables precise monitoring, a quick response to changes and therefore efficient process control.
- Precise and long-term stable measurement ensures high process reliability and enables customized disinfectant dosing.
- Suitable sensor versions for every measuring range: from trace measurement to concentrations of 200 mg/l free chlorine.
- Convenient combination with other relevant liquid analysis parameters, such as pH and ORP, by connection to the Liquiline transmitter.

Endress+Hauser
People for Process Automation

Consultas y ventas: AQUAREP · www.aquarep.com.ar · info@aquarep.com.ar · WhatsApp +54 9 11 6091-0087

Table of contents

Function and system design 3
Measuring principle 3
Measuring system 3
Dependability 4

Input 5
Measured variables 5
Measuring range 5
Signal current 5

Power supply 5
Electrical connection 5

Performance characteristics 5
Reference operating conditions 5
Response time 5
Polarization time 6
Measured value resolution 6
Measurement error 6
Repeatability 6
Nominal slope 6
Long-term drift 6
Operating time of the electrolyte 6
Intrinsic consumption 6

Installation 6
Orientation 6
Immersion depth 7
Installation instructions 7

Environment 7
Ambient temperature range 7
Storage temperature range 7
Degree of protection 7

Process 7
Process temperature range 7
Process pressure 7
pH range 8
Conductivity 8
Flow limit 8
Flow 8

Mechanical construction 9
Dimensions 9
Weight 9
Materials 9
Cable specification 9

Certificates and approvals 9

Ordering information 10
Product page 10
Product Configurator 10
Scope of delivery 10

Accessories 10
Service-specific accessories 10
Device-specific accessories 10

Function and system design

Measuring principle

Free chlorine is determined via hypochlorous acid (HOCl) according to the amperometric measuring principle.

The hypochlorous acid (HOCl) contained in the medium diffuses through the sensor membrane and is reduced to chloride ions (Cl^-) at the gold working electrode. At the silver counter electrode, silver is oxidized to silver chloride. Electron donation at the gold working electrode and electron acceptance at the silver counter electrode causes a current to flow which is proportional to the concentration of free chlorine in the medium at constant conditions.

The concentration of hypochlorous acid (HOCl) depends on the pH value. An additional pH measurement should be used to compensate for this dependency.

The transmitter uses the current signal in nA to calculate the measured variable for concentration in mg/l (ppm).

Operating principle

The sensor consists of:
- Membrane cap (bypass with membrane)
- Sensor shaft with counter electrode with large surface area and a working electrode embedded in plastic

The electrodes are in an electrolyte which is separated from the medium by a membrane. The membrane prevents the electrolyte from leaking and protects against contaminant penetration.

The measuring system is calibrated by means of a colorimetric comparison measurement in accordance with the DPD method for free chlorine. The determined reference value is entered into the transmitter, where it is used for adjustment.

Cross-sensitivity

- There are cross-sensitivities for: chlorine dioxide, ozone, free bromine.
- There are no cross-sensitivities for: H_2O_2, peracetic acid.

Measuring system

A complete measuring system comprises:
- Disinfection sensor CCS51E (membrane-covered, Ø25 mm (0.98 in)) with appropriate mounting adapter
- Flowfit CYA27 flow assembly
- Measuring cable CYK10, CYK20
- Transmitter, e.g. Liquiline CM44x with firmware 01.13.00 or higher or CM44xR with firmware 01.13.00 or higher
- Optional: extension cable CYK11
- Optional: proximity switch
- Optional: Flexdip CYA112 immersion assembly
- Optional: CPS31E pH sensor

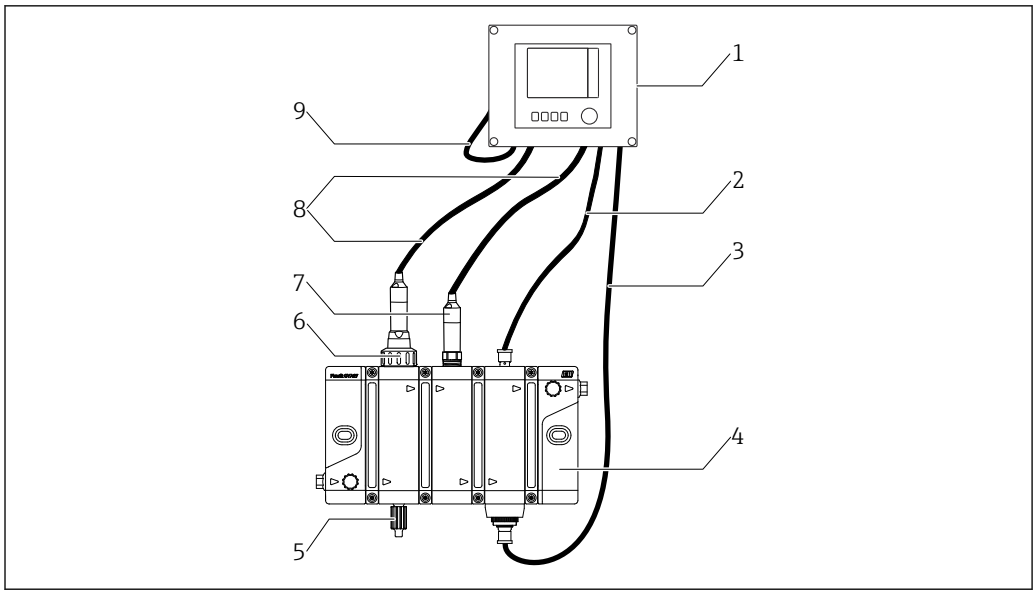

1 *Example of a measuring system*

1 *Transmitter Liquiline CM44x or CM44xR*
2 *Cable for inductive switch*
3 *Cable for status lighting on assembly*
4 *Flow assembly, e.g. Flowfit CYA27*
5 *Sampling valve*
6 *Disinfection sensor Memosens CCS51E (membrane-covered, Ø 25 mm)*
7 *pH sensor Memosens CPS31E*
8 *Measuring cable CYK10*
9 *Power supply cable Liquiline CM44x or CM44xR*

Dependability

Reliability

Memosens MEMOSENS

Memosens makes your measuring point safer and more reliable:
- Non-contact, digital signal transmission enables optimum galvanic isolation
- Dust- and waterproof (IP 68)
- Sensor can be calibrated in a lab, thus increasing the availability of the measuring point in the process
- Predictive maintenance thanks to recording of sensor data, e.g.:
  - Total hours of operation
  - Hours of operation with very high or very low measured values
  - Hours of operation at high temperatures
  - Calibration history

Maintainability

Easy handling

Sensors with Memosens technology have integrated electronics that store calibration data and other information (e.g. total hours of operation or hours of operating under extreme measuring conditions). Once the sensor has been connected, the sensor data are transferred automatically to the transmitter and used to calculate the current measured value. As the calibration data are stored in the sensor, the sensor can be calibrated and adjusted independently of the measuring point. The result:
- Easy calibration in the measuring lab under optimum external conditions increases the quality of the calibration.
- Precalibrated sensors can be replaced quickly and easily, resulting in a noticeable increase in the availability of the measuring point.
- Thanks to the availability of the sensor data, maintenance intervals can be accurately defined and predictive maintenance is possible.
- The sensor history can be documented on external data carriers and evaluation programs.
- Thus, the current application of the sensor can be determined depending on its previous history.

Security

Data security thanks to digital data transmission
Memosens technology digitizes the measured values in the sensor and transmits the data to the transmitter via a non-contact connection that is free from potential interference. The result:
- Automatic error message if sensor fails or connection between sensor and transmitter is interrupted
- Immediate error detection increases measuring point availability

Input

Measured variables	Free chlorine (HOCl)	Hypochlorous acid (HOCl) [mg/l, µg/l, ppm, ppb]
	Temperature	[°C, °F]
Measuring range	CCS51E-**11AD**	0 to 5 mg/l (ppm) HOCl
	CCS51E-**11BF**	0 to 20 mg/l (ppm) HOCl
	CCS51E-**11CJ**	0 to 200 mg/l (ppm) HOCl
Signal current	CCS51E-**11AD**	33 to 63 nA per 1 mg/l (ppm) HOCl
	CCS51E-**11BF**	9 to 18 nA per 1 mg/l (ppm) HOCl
	CCS51E-**11CJ**	9 to 18 nA per 1 mg/l (ppm) HOCl

Power supply

Electrical connection

is electrically connected to the transmitter is performed via the Memosens data cable CYK10 or CYK20 measuring cable.

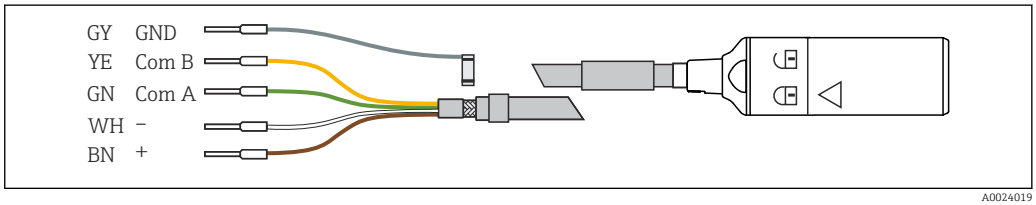

2 *Measuring cable CYK10*

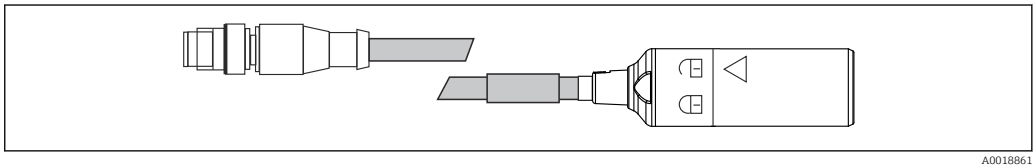

3 *CYK10 with M12 plug, electrical connection*

Performance characteristics

Reference operating conditions	Temperature	20 °C (68 °F)
	pH value	pH 5.5 ±0.2
	Flow	40 to 60 cm/s (15.7 to 23.6 in/s)
	HOCl-free base medium	Mains water
Response time	T_{90} < 25 s (after completing polarization)	

The T_{90} time can be longer under certain conditions. If the sensor is operated or stored in a chlorine-free medium for a longer period, the sensor response starts immediately if chlorine is present but only reaches the exact concentration value after a delay.

Polarization time

Initial commissioning	45 min
Recommissioning	20 min

Measured value resolution

CCS51E-**11AD**	0.03 µg/l (ppb) HOCl
CCS51E-**11BF**	0.13 µg/l (ppb) HOCl
CCS51E-**11CJ**	1.10 µg/l (ppb) HOCl

Measurement error

	LOD (limit of detection) [1]	LOQ (limit of quantification) [1]
CCS51E-**11AD**	0.002 mg/l (ppm)	0.005 mg/l (ppm)
CCS51E-**11BF**	0.002 mg/l (ppm)	0.007 mg/l (ppm)
CCS51E-**11CJ**	0.008 mg/l (ppm)	0.027 mg/l (ppm)

1) Based on ISO 15839. The measurement error includes all the uncertainties of the sensor and transmitter (measuring chain). It does not contain all the uncertainties caused by the reference material and adjustments that may have been performed.

Repeatability

CCS51E-**11AD**	0.0031 mg/l (ppm)
CCS51E-**11BF**	0.0035 mg/l (ppm)
CCS51E-**11CJ**	0.062 mg/l (ppm)

Nominal slope

CCS51E-**11AD**	48 nA per 1 mg/l (ppm) HOCl
CCS51E-**11BF**	14 nA per 1 mg/l (ppm) HOCl
CCS51E-**11CJ**	14 nA per 1 mg/l (ppm) HOCl

Long-term drift

< 1 % per month (mean value, determined while operating at varying concentrations and under reference conditions)

Operating time of the electrolyte

at 10 % of measuring range and 20 °C	2 years
at 50 % of measuring range and 20 °C	1 year
at maximum concentration and 55 °C	60 days

Intrinsic consumption

The intrinsic consumption of chlorine at the sensor is negligible.

Installation

Orientation

NOTICE

Do not install upside down!

There is no secured electrolyte film on the work electrode and therefore no sensor function.

- ▶ Install the sensor in an assembly, support or appropriate process connection at an angle of at least 15 ° to the horizontal.
- ▶ Other angles of inclination are not permitted.
- ▶ Follow the instructions for installing the sensor in the Operating Instructions of the assembly used.

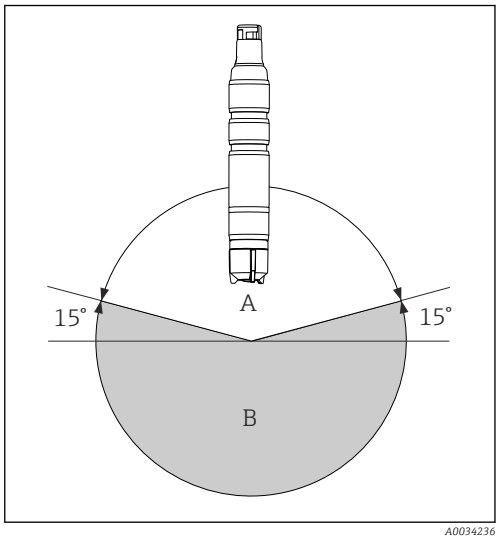

A Permitted orientation
B Incorrect orientation

Immersion depth

At least 50 mm (1.97 in).

This corresponds to the mark (▼) on the sensor.

Installation instructions

Installing the sensor in the Flowfit CYA27 assembly

The sensor can be installed in the Flowfit CYA27 flow assembly. In addition to the installation of the free chlorine sensor, this assembly also enables the simultaneous operation of several other sensors and flow monitoring.

Please note the following during installation:
- Guarantee the minimum flow to the sensor 15 cm/s (0.49 ft/s) and the minimum volume flow of the assembly (5 l/h or 30 l/h).
- If the medium is fed back into an overflow basin, pipe or similar, the resulting counterpressure on the sensor may not exceed 1 bar relativ (14.5 psi relativ) (2 bar abs. (29 psi abs.)) and must remain constant.
- Avoid a vacuum at the sensor, e.g. due to medium being returned to the suction side of a pump.
- To avoid buildup, heavily contaminated water should also be filtered.

Environment

Ambient temperature range

−20 to 60 °C (−4 to 140 °F)

Storage temperature range

	Long-term storage up to 2 years (maximum)	Storage up to 48 h (maximum)
With electrolyte	0 to 35 °C (32 to 95 °F) (non-freezing)	35 to 55 °C (95 to 131 °F)
Without electrolyte	−20 to 60 °C (−4 to 140 °F)	

Degree of protection

IP68 (1.8 m (5.91 ft)) water column over 7 days at 20 °C (68 °F)

Process

Process temperature range

0 to 55 °C (32 to 130 °F), non-freezing

Process pressure

The inlet pressure depends on the specific fitting and installation.

The measurement can take place with a free outlet.

The sensor can be operated at process pressures up to 1 bar relativ (14.5 psi relativ) (2 bar abs. (29 psi abs.)).

pH range

Range of effectiveness of free chlorine	pH 4 to 9 [1]
Calibration	pH 4 to 8
Measurement	pH 4 to 9

1) Up to pH 4 and in the presence of chloride ions (Cl^-), Cl_2 is produced which is also measured

Conductivity

The sensor can also be used in media with a very low conductivity, such as demineralized water. In this case, attention must be paid to the reduced pH buffer capacity of the medium. This is expressed in a pH value that is difficult to adjust and can affect the pH compensation.

Flow limit

At least 5 l/h (1.3 gal/h), in the Flowfit CYA27 flow assembly (5 l version)

At least 30 l/h (7.9 gal/h), in the Flowfit CYA27 flow assembly (30 l version)

Flow

At least 15 cm/s (0.5 ft/s) , e.g. with Flexdip CYA112 immersion assembly

- In terms of sensor condition and performance, it is essential that the flow velocity limits specified in the following table be observed.

	Flow velocity [cm/s]	Volume flow [l/h]		
		Flowfit CYA27 (5 l version)	Flowfit CYA27 (30 l version)	Flexdip CYA112
Minimum	15	5	30	The sensor is suspended freely in the medium; pay attention to the minimum flow velocity of 15 cm/s during installation.
Maximum	80	30	60	

Mechanical construction

Dimensions

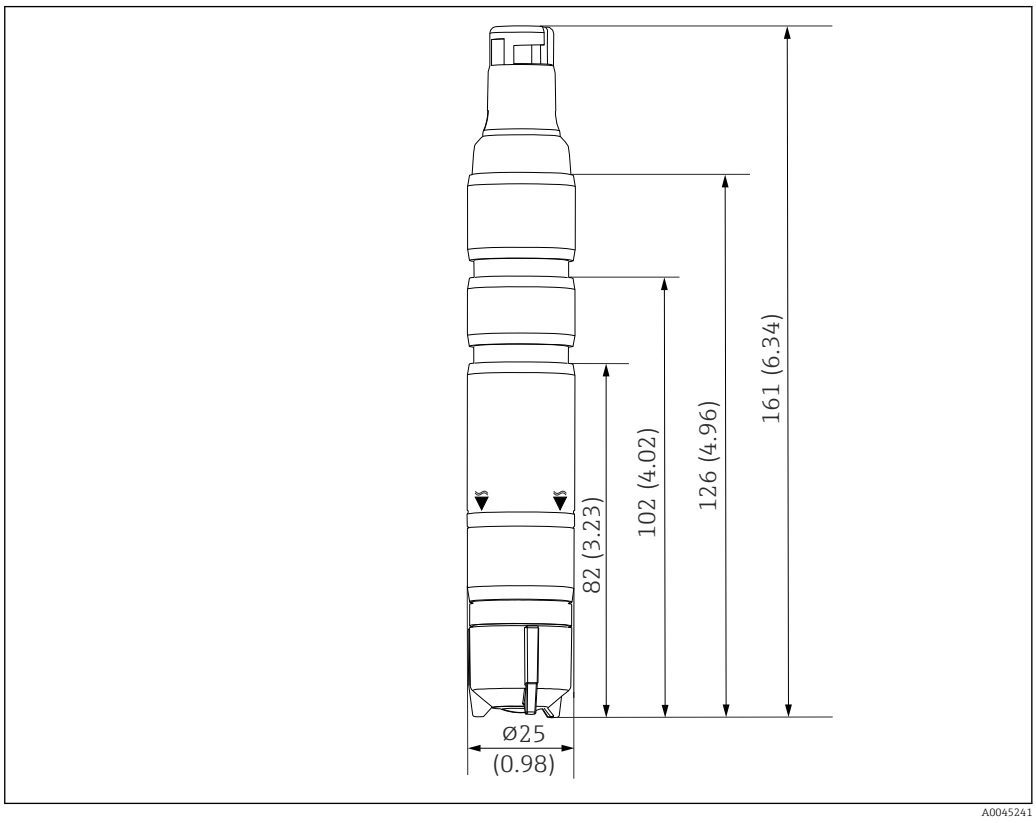

4 *Dimensions in mm (in)*

Weight

Sensor with membrane cap and electrolyte (without protection cap and without adapter)
Approx. 95 g (3.35 oz)

Materials

Sensor shaft	PVC
Membrane	PVDF
Membrane cap	PVDF
Protective cap	▪ Vessel: PC Makrolon (polycarbonate) ▪ Seal: Kraiburg TPE TM5MED ▪ Cover: PC Makrolon (polycarbonate)
Sealing ring	FKM
Sensor shaft coupling	PPS

Cable specification

max. 100 m (330 ft), incl. Cable extension

Certificates and approvals

Current certificates and approvals for the product are available via the Product Configurator at

1. Select the product using the filters and search field.
2. Open the product page.

The **Configuration** button opens the Product Configurator.

Ordering information

Product page

Product Configurator

Detailed ordering information is available from your nearest sales organization

1. Select the product using the filters and search field.
2. Open the product page.
3. Select **Configuration**.

Product Configurator - the tool for individual product configuration
- Up-to-the-minute configuration data
- Depending on the device: direct input of information specific to the measuring point, such as the measuring range or operating language
- Automatic verification of exclusion criteria
- Automatic creation of the order code and its breakdown in PDF or Excel output format
- Ability to order directly in the Endress+Hauser Online Shop

Scope of delivery

The scope of delivery comprises:
- Disinfection sensor (membrane-covered, Ø25 mm) with protective cap (ready for use)
- Bottle with electrolyte (50 ml (1.69 fl oz))
- Replacement membrane cap in protective cap
- Operating instructions
- Manufacturer's certificate

Accessories

The following are the most important accessories available at the time this documentation was issued.

Listed accessories are technically compatible with the product in the instructions.

1. Application-specific restrictions of the product combination are possible.
   Ensure conformity of the measuring point to the application. This is the responsibility of the operator of the measuring point.
2. Pay attention to the information in the instructions for all products, particularly the technical data.
3. For accessories not listed here, please contact your Service or Sales Center.

Service-specific accessories

Maintenance kit CCV05

Order according to product structure

- 2 x membrane caps and 1 x electrolyte 50 ml (1.69 fl oz)
- 1 x electrolyte 50 ml (1.69 fl oz)
- 2 x sealing set

Device-specific accessories

Memosens data cable CYK10
- For digital sensors with Memosens technology

Technical Information TI00118C

Memosens data cable CYK11
- Extension cable for digital sensors with Memosens protocol

Technical Information TI00118C

Memosens laboratory cable CYK20
- For digital sensors with Memosens technology

Flowfit CYA27
- Modular flow assembly for multiparameter measurements

Technical Information TI01559C

Flexdip CYA112
- Immersion assembly for water and wastewater
- Modular assembly system for sensors in open basins, channels and tanks
- Material: PVC or stainless steel

Technical Information TI00432C

Photometer PF-3
- Compact hand-held photometer for determining the reference measured value
- Color-coded reagent bottles with clear dosing instructions
- Order No.: 71257946

Adapter kit CCS5x(D/E) for CYA27
- Clamping ring
- Thrust collar
- O-ring
- Order No. 71372027

Adapter kit CCS5x(D/E) for CYA112
- Adapter incl. O-rings
- 2 studs for locking in place
- Order No. 71372026

Complete quick fastener kit for CYA112
- Adapter, inner and outer parts incl. O-rings
- Tool for mounting and disassembly
- Order No. 71093377 or mounted accessory of CYA112

COY8

Zero-point gel for oxygen and disinfection sensors
- Disinfectant-free gel for the verification, zero point calibration and adjustment of oxygen and disinfection measuring points

Technical Information TI01244C



Endress+Hauser

People for Process Automation

Consultas y ventas: AQUAREP · www.aquarep.com.ar · info@aquarep.com.ar · WhatsApp +54 9 11 6091-0087