DuPont™ FilmTec™ elements

DUPONT™

Product Data Sheet | Reverse Osmosis

FilmTec™ SW30XLE-400/34 Element

Seawater Extra Fouling Resistant Low Energy Reverse Osmosis Membrane Element

Key Features

- Excellent balance of energy consumption, system productivity, and fouling resistance.
- Excellent durability with stable long-term performance
- Supports cleaning across a wide pH range for effective management of biofilm, organics, and scale.

Key Applications

- Seawater installations with challenging or high-fouling feedwater conditions
- Medium and high water salinity.
- Internally Staged Designs (ISD).



Typical Properties

Product	Active Area ft² (m²)	Feed Spacer Thickness (mil)	Permeate Flow Rate gpd (m³/d)	Stabilized Boron Rejection (%)	Stabilized Salt Rejection (%)	Minimum Salt Rejection (%)
SW30XLE-400/34	400 (37)	34	9,000 (34)	91.5	99.8	99.6

1. The above benchmark values are based on the following test conditions: 32,000 ppm NaCl, 5 ppm boron, 800 psi (5.5 MPa), 77°F (25°C), pH 8, 8% recovery.
2. Permeate flows for individual elements may vary ± 15%.
3. Sales specifications may vary as design revisions take place.

Element Dimensions

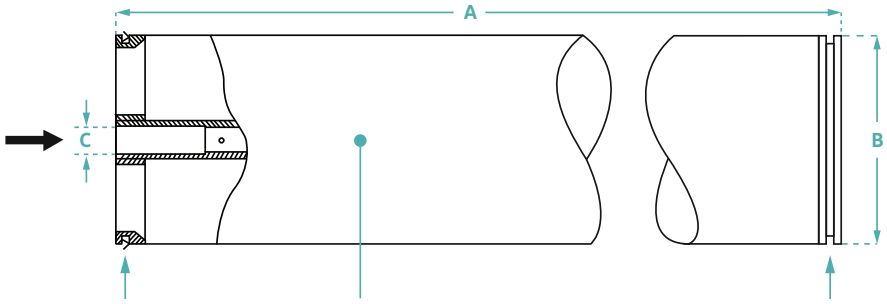



FilmTec™ supplies coupler part number 313198 with each element. Each coupler includes two 3-912 EPR O-rings (part number 151705).

	Dimensions – inches (mm)
A	40.0 (1,016)
B	7.9 (201)
C	1.125 ID (29)

ID = Inner Diameter
1 inch = 25.4 mm

1. For element weight information refer to What is the weight of FilmTec™ elements as delivered? (Form No. 45-D04811-en)
2. For element packaging and shipping information refer to How are FilmTec™ elements packaged and shipped? (Form No. 45-D04811-en)

Form No. 45-D04980-en, Rev. 0
December 2025

Consultas y ventas: AQUAREP · www.aquarep.com.ar · info@aquarep.com.ar · WhatsApp +54 9 11 6091-0087

Suggested Operating Conditions

Membrane Type	Polyamide Thin-Film Composite
Maximum Operating Temperature [2, 3]	113°F (45°C)
Maximum Operating Pressure [3]	1,200 psi (83 bar)
Maximum Pressure Drop	
Per Element	15 psi (1.0 bar)
Per Pressure Vessel (Minimum 4 Elements)	50 psi (3.5 bar)
pH Range	
Continuous Operation [2]	2 - 11
Short-Term Cleaning (30 min.) [4]	1 - 13
Maximum Feed Silt Density Index (SDI)	SDI 5
Free Chlorine Tolerance [5]	< 0.1 ppm

1. For recommended feed and permeate flow rates, flux, and recovery for various feed sources, refer to FilmTec™ Design Guidelines for multiple-element systems of 8-inch elements (Form No. 45-D01695-en).
2. Maximum temperature for continuous operation above pH 10 is 95°F (35°C).
3. Consult your DuPont representative for advice on applications above 95°F (35°C). Relevant information regarding operation at high temperature and pressure: FilmTec™ Seawater Elements Operating Limits (Form No. 45-D00691-en) and Shimming Elements (Form No. 45-D01057-en).
4. Refer to Cleaning Procedures for FilmTec™ Elements (Form No. 45-D01696-en).
5. Oxidation damage is not covered under warranty, DuPont recommends removing residual free chlorine by pretreatment prior to membrane exposure. Please refer to Dechlorinating Feedwater (Form No. 45-D01569-en) for more information.

Important General Information

- Keep elements moist at all times after initial wetting.
- For successful operation of Reverse Osmosis (RO) and Nanofiltration (NF) membrane systems, the operation must follow the guidelines provided in the FilmTec™ Reverse Osmosis / Nanofiltration Elements Operation Excellence and Limiting Conditions Tech Fact (Form No. 45-D04388-en).
- To prevent biological growth during prolonged system shutdowns, it is recommended that membrane elements be immersed in a preservative solution.
- The customer is fully responsible for the effects of incompatible chemicals and lubricants on elements.
- Avoid static permeate-side backpressure at all times.
- Permeate obtained from the first hour of operation should be discarded.
- The use of this product in and of itself does not necessarily guarantee the removal of cysts and pathogens from water. Effective cyst and pathogen reduction is dependent on the complete system design and on the operation and maintenance of the system.

Please consider good operating practices for the optimal performance of the Reverse Osmosis membrane elements to assure damage free operation:

1. Loading of Pressure Vessels – Preparation & Element Loading (Form No. 45-D01602-en)
2. System Operation, including plant Start-Up Sequence (Form No. 45-D01609-en) and RO & NF Systems Shutdown (Form No. 45-D01613-en)
3. Handling, Preservation, and Storage (Form No. 45-D03716-en)

Full information of plant design, system operation, and troubleshooting is given in the FilmTec™ Reverse Osmosis Membranes Technical Manual (Form No. 45-D01504-en).

Regulatory Note

This product may be subject to drinking water application restrictions in some countries; please check the application status before use and sale.

DUPONT™

All information set forth herein is for informational purposes only. This information is general information and may differ from that based on actual conditions. Customer is responsible for determining whether products and the information in this document are appropriate for Customer's use and for ensuring that Customer's workplace and disposal practices are in compliance with applicable laws and other government enactments. The product shown in this literature may not be available for sale and/or available in all geographies where DuPont is represented. The claims made may not have been approved for use in all countries. Please note that physical properties may vary depending on certain conditions and while operating conditions stated in this document are intended to lengthen product lifespan and/or improve product performance, it will ultimately depend on actual circumstances and is in no event a guarantee of achieving any specific results. DUPONT ASSUMES NO OBLIGATION OR LIABILITY FOR THE INFORMATION IN THIS DOCUMENT. References to "DuPont" or the "Company" mean the DuPont legal entity selling the products to Customer unless otherwise expressly noted. NO WARRANTIES ARE GIVEN; ALL IMPLIED WARRANTIES OF MERCHANTABILITY OR FITNESS FOR A PARTICULAR PURPOSE ARE EXPRESSLY EXCLUDED. No freedom from infringement of any patent or trademark owned by DuPont or others is to be inferred.

dupont.com/water/contact-us

DuPont™, the DuPont Oval Logo, and all trademarks and service marks denoted with ™, ℠ or ® are owned by affiliates of DuPont de Nemours, Inc. unless otherwise noted. © 2025 DuPont. All rights reserved

Form No. 45-D04980-en, Rev. 0
December 2025

Consultas y ventas: AQUAREP · www.aquarep.com.ar · info@aquarep.com.ar · WhatsApp +54 9 11 6091-0087