DuPont™ FilmTec™ elements

DUPONT™

Product Data Sheet | Reverse Osmosis

FilmTec™ Seamaxx™-440 Element

Seawater Extra Low Energy Reverse Osmosis Membrane Element



Key Features

- Delivers very high permeate flow allowing considerable savings in energy consumption.
- Permits low system capital cost by maximizing production capacity.
- Excellent durability resulting in stable, long-term performance.

Key Applications

- Seawater desalination for municipal and industrial applications.
- Suitable for low and medium feed water salinity.
- Ideal for installations with high energy cost.
- Applicable for optimized Internally Staged Designs (ISD) in combination with other FilmTec™ seawater membranes.
- Suitable for mid-stage lithium concentration in Direct Lithium Extraction (5–10x enrichment).

Typical Properties of Standard Test performed at 600 psi (4.1 MPa)

Product	Active Area ft² (m²)	Feed Spacer Thickness (mil)	Permeate Flow Rate gpd (m³/d)	Stabilized Boron Rejection (%)	Stabilized Salt Rejection (%)	Minimum Salt Rejection (%)
FilmTec™ Seamaxx™-440 element	440 (41)	28	9,050 (34.2)	81.8	99.47	99.25

1. Permeate flow and salt rejection based on the following standard conditions: 32,000 ppm NaCl, 5 ppm boron, 600 psi (41 bar), 77°F (25°C), pH 8, 8% recovery.
2. Flow rates for individual elements may vary but will be no more than 15% below the value shown.
3. A period of continuous operation is generally required to reach stabilized salt rejection, with the rate of stabilization depending upon feedwater characteristics and operating conditions.
4. Sales specifications may vary as design revisions take place.

Expected Properties and Performance at Common Standard Test Conditions: 800 psi (5.5 MPa)

Product	Active Area ft² (m²)	Feed Spacer Thickness (mil)	Permeate Flow Rate gpd (m³/d)	Stabilized Boron Rejection (%)	Stabilized Salt Rejection (%)	Minimum Salt Rejection (%)
FilmTec™ Seamaxx™-440 element	440 (41)	28	17,000 (64.4)	89	99.7	99.58

1. The above values are normalized from the 600-psi specification standard test to the following conditions: 32,000 ppm NaCl, 5 ppm boron, 800 psi (55 MPa), 77°F (25°C), pH 8, 8% recovery. Due to the very high permeability of FilmTec™ Seamaxx™-440 Elements, they are not tested at the typical feed pressure for standard test conditions of 800 psi, but at a lower feed pressure of 600 psi. This allows to standard test the element within its operating guidelines.
2. Flow rates for individual elements may vary but will be no more than 15% below the value shown.
3. A period of continuous operation is generally required to reach stabilized salt rejection, with the rate of stabilization depending upon feedwater characteristics and operating conditions.
4. Sales specifications may vary as design revisions take place.

Element Dimensions

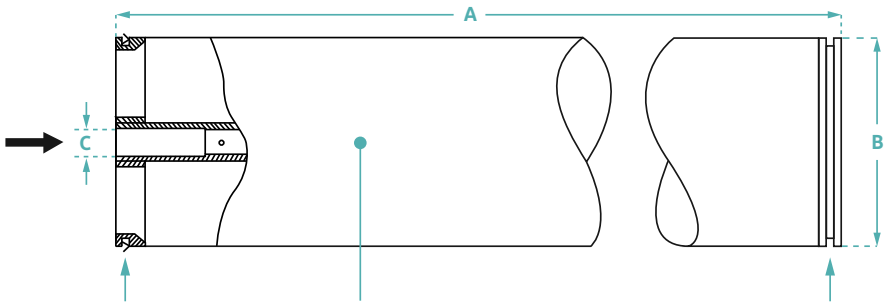



FilmTec™ supplies coupler part number 313198 with each element. Each coupler includes two 3-912 EPR O-rings (part number 151705).

	Dimensions – inches (mm)
A	40.0 (1,016)
B	7.9 (201)
C	1.125 ID (29)

ID = Inner Diameter
1 inch = 25.4 mm

1. For element weight information refer to What is the weight of FilmTec™ elements as delivered? (Form No. 45-D04811-en)
2. For element packaging and shipping information refer to How are FilmTec™ elements packaged and shipped? (Form No. 45-D04811-en)

Form No. 45-D00689-en, Rev. 9
May 2026

Consultas y ventas: AQUAREP · www.aquarep.com.ar · info@aquarep.com.ar · WhatsApp +54 9 11 6091-0087

Suggested Operating Conditions

Membrane Type	Polyamide Thin-Film Composite
Maximum Operating Temperature[1]	113°F (45°C)
Maximum Operating Pressure	1,200 psi (83 bar)
Maximum Pressure Drop	
Per Element	15 psi (1.0 bar)
Per Pressure Vessel (Minimum 4 Elements)	50 psi (3.5 bar)
pH Range	
Continuous Operation[1]	2 - 11
Short-Term Cleaning (30 min.)[2]	1 - 13
Maximum Feed Silt Density Index (SDI)	SDI 5
Free Chlorine Tolerance[4]	< 0.1 ppm

1. Maximum temperature for continuous operation above pH 10 is 95°F (35°C). Consult your DuPont representative for advice on applications above 95°F (35°C). Relevant information regarding operation at high temperature and pressure: FilmTec™ Seawater Elements Operating Limits (Form No. 45-D00691-en) and Shimming Elements (Form No. 45-D01057-en).
2. Refer to Cleaning Procedures for FilmTec™ Elements (Form No. 45-D01696-en).
3. For recommended feed and permeate flow rates, flux, and recovery for various feed sources, refer to Membrane System Design Guidelines for 8" FilmTec™ Elements (Form No. 45-D01695-en).
4. Oxidation damage is not covered under warranty, DuPont recommends removing residual free chlorine by pretreatment prior to membrane exposure. Please refer to Dechlorinating Feedwater (Form No. 45-D01569-en) for more information.

Important General Information

- Keep elements moist at all times after initial wetting.
- For successful operation of Reverse Osmosis (RO) and Nanofiltration (NF) membrane systems, the operation must follow the guidelines provided in the FilmTec™ Reverse Osmosis / Nanofiltration Elements Operation Excellence and Limiting Conditions Tech Fact (Form No. 45-D04388-en).
- To prevent biological growth during prolonged system shutdowns, it is recommended that membrane elements be immersed in a preservative solution.
- The customer is fully responsible for the effects of incompatible chemicals and lubricants on elements.
- Avoid static permeate-side backpressure at all times.
- Permeate obtained from the first hour of operation should be discarded.
- The use of this product in and of itself does not necessarily guarantee the removal of cysts and pathogens from water. Effective cyst and pathogen reduction is dependent on the complete system design and on the operation and maintenance of the system.

Please consider good operating practices for the optimal performance of the Reverse Osmosis membrane elements to assure damage free operation:

1. Loading of Pressure Vessels – Preparation & Element Loading (Form No. 45-D01602-en)
2. System Operation, including plant Start-Up Sequence (Form No. 45-D01609-en) and RO & NF Systems Shutdown (Form No. 45-D01613-en)
3. Handling, Preservation, and Storage (Form No. 45-D03716-en)

Full information of plant design, system operation, and troubleshooting is given in the FilmTec™ Reverse Osmosis Membranes Technical Manual (Form No. 45-D01504-en).

Regulatory Note

This product may be subject to drinking water application restrictions in some countries; please check the application status before use and sale.

DUPONT

All information set forth herein is for informational purposes only. This information is general information and may differ from that based on actual conditions. Customer is responsible for determining whether products and the information in this document are appropriate for Customer's use and for ensuring that Customer's workplace and disposal practices are in compliance with applicable laws and other government enactments. The product shown in this literature may not be available for sale and/or available in all geographies where DuPont is represented. The claims made may not have been approved for use in all countries. Please note that physical properties may vary depending on certain conditions and while operating conditions stated in this document are intended to lengthen product lifespan and/or improve product performance, it will ultimately depend on actual circumstances and is in no event a guarantee of achieving any specific results. DuPont assumes no obligation or liability for the information in this document. References to "DuPont" or the "Company" mean the DuPont legal entity selling the products to Customer unless otherwise expressly noted. NO WARRANTIES ARE GIVEN; ALL IMPLIED WARRANTIES OF MERCHANTABILITY OR FITNESS FOR A PARTICULAR PURPOSE ARE EXPRESSLY EXCLUDED. No freedom from infringement of any patent or trademark owned by DuPont or others is to be inferred.

dupont.com/water/contact-us

DuPont™, the DuPont Oval Logo, and all trademarks and service marks denoted with ™, SM or ® are owned by affiliates of DuPont de Nemours Inc. unless otherwise noted. © 2026 DuPont. All rights reserved.

Form No. 45-D00689-en, Rev. 9
May 2026

Consultas y ventas: AQUAREP · www.aquarep.com.ar · info@aquarep.com.ar · WhatsApp +54 9 11 6091-0087