DuPont™ FilmTec™ elements

DUPONT™

Product Data Sheet | Reverse Osmosis

FilmTec™ Fortilife™ XC-Max UHP Element

Ultra-high Pressure Element for Industrial Ultra-High Brine Concentration



Key Features

- Ability to achieve reject Total Dissolved Solids (TDS) level up to 250 g/L NaCl within ultra-high-pressure RO (UHPRO) pressure limit (<120 bar).
- Streamline water treatment process by minimizing permeate recycle and reducing the number of stages.
- Expertly designed membrane and advanced module design offers stable performance under ultra-high-pressure conditions (up to 120 bar).
- Robust membrane chemistry enabling a wide pH range for operation and cleaning.

Key Applications

Industrial wastewater minimum- and zero-liquid discharge (MLD/ZLD), such as in

- Chemical & Petrochemical
- Lithium-ion Battery Manufacturing
- Steel & Iron industry
- Power Generation
- Pulp & Paper
- Textiles

Resource recovery for industrial reuse
Sodium chloride recovery in Desalination
Ultra-high brine concentration in Direct Lithium Extraction (DLE)

Typical Properties

Product	Active Area ft² (m²)	Feed Spacer Thickness (mil)	Permeate Flow Rate gpd (m³/d)	Stabilized Salt Rejection (%)	Minimum Salt Rejection (%)
FilmTec™ Fortilife™ XC-Max UHP element	350 (32.5)	34	16,000 (60.5)	80	75

1. Permeate flow and salt rejection based on the following standard conditions: 32,000 ppm NaCl, 600 psi (41 bar), 77°F (25°C), pH 8 and 15% recovery.
2. Flow rates for individual elements may vary but will be no more than 20% below the value shown.
3. A period of continuous operation is generally required to reach stabilized salt rejection, with the rate of stabilization depending on feedwater characteristics and operating conditions.
4. Sales specifications may vary as design revisions take place.

Example Brine Concentration Projection

Product	Feed Pressure psi (bar)	Feed TDS (ppm)	Concentrate TDS (ppm)	Avg. Flux GFD (LMH)	Avg. Recovery (%)
FilmTec™ Fortilife™ XC-Max UHP element	1,450 (100)	177,699	252,785	6.9 (11.7)	64

1. Results obtained from a simulation of a two-stage 20:8 (7) vessel array treating 150 m³/h water containing sodium chloride at pH 7, 77°F (25°C) and flow factor = 0.5.
2. No warranty is provided for the application of this information since use conditions and applicable laws may differ from one location to another and may change with time.

Element Dimensions

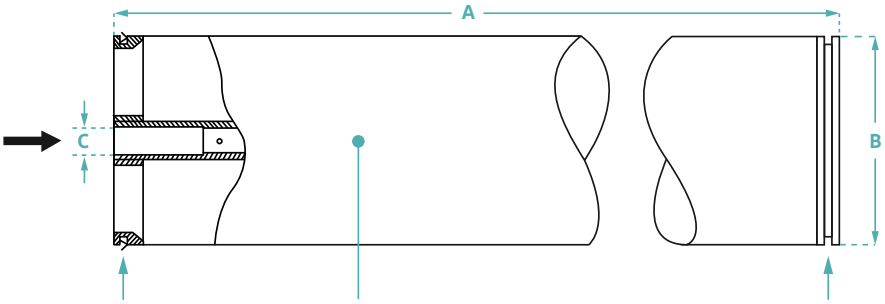

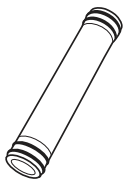

FilmTec™ supplies coupler part number 99098178 with each element. Each coupler includes four 2-119 EPR O-rings (part number 99098201).

	Dimensions – inches (mm)
A	40.0 (1,016)
B	7.9 (201)
C	1.125 ID (29)

ID = Inner Diameter
1 inch = 25.4 mm

1. For element weight information refer to What is the weight of FilmTec™ elements as delivered? (Form No. 45-D04811-en)
2. For element packaging and shipping information refer to How are FilmTec™ elements packaged and shipped? (Form No. 45-D04811-en)

Form No. 45-D04994-en, Rev. 2
May 2026

Consultas y ventas: AQUAREP · www.aquarep.com.ar · info@aquarep.com.ar · WhatsApp +54 9 11 6091-0087

Suggested Operating Conditions

Membrane Type	Polyamide Thin-Film Composite
Maximum Operating Temperature[1]	113°F (45°C)
Maximum Operating Pressure	1,740 psi (120 bar)
Maximum Pressure Drop	
Per Element	15 psi (1.0 bar)
Per Pressure Vessel (Minimum 4 Elements)	60 psi (4.1 bar)
pH Range	
Continuous Operation[1]	2 - 11
Short-Term Cleaning (30 min.)[2]	1 - 13
Maximum Feed Flow[3]	65 gpm (14.77 m^3/h)
Maximum Feed Silt Density Index (SDI)	SDI 5
Free Chlorine Tolerance[4]	< 0.1 ppm

1. Maximum temperature for continuous operation above pH 10 is 95°F (35°C).
2. Refer to Cleaning Procedures for FilmTec™ Elements (Form No. 45-D01696-en).
3. For recommended feed and permeate flow rates, flux, and recovery for various feed sources, refer to Membrane System Design Guidelines for 8" FilmTec™ Elements (Form No. 45-D01695-en).
4. Oxidation damage is not covered under warranty, DuPont recommends removing residual free chlorine by pretreatment prior to membrane exposure. Please refer to Dechlorinating Feedwater (Form No. 45-D01569-en) for more information.

Maximum Feed Pressure vs. Temperature

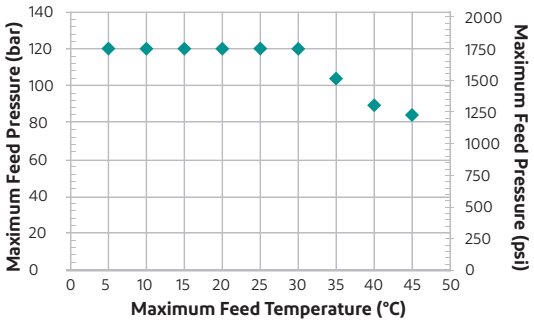

Maximum Feed Temperature		Maximum Feed Pressure	
(°C)	(°F)	(bar)	(psi)
5	41	120	1740
10	50	120	1740
15	59	120	1740
20	68	120	1740
25	77	120	1740
30	88	120	1740
35	95	103	1494
40	104	90	1305
45	113	83	1200

Important General Information

- Keep elements moist at all times after initial wetting.
- For successful operation of Reverse Osmosis (RO) and Nanofiltration (NF) membrane systems, the operation must follow the guidelines provided in the FilmTec™ Reverse Osmosis / Nanofiltration Elements Operation Excellence and Limiting Conditions Tech Fact (Form No. 45-D04388-en).
- To prevent biological growth during prolonged system shutdowns, it is recommended that membrane elements be immersed in a preservative solution.
- The customer is fully responsible for the effects of incompatible chemicals and lubricants on elements.
- Avoid static permeate-side backpressure at all times.
- Permeate obtained from the first hour of operation should be discarded.
- The use of this product in and of itself does not necessarily guarantee the removal of cysts and pathogens from water. Effective cyst and pathogen reduction is dependent on the complete system design and on the operation and maintenance of the system.

Please consider good operating practices for the optimal performance of the Reverse Osmosis membrane elements to assure damage free operation:

1. Loading of Pressure Vessels – Preparation & Element Loading (Form No. 45-D01602-en)
2. System Operation, including plant Start-Up Sequence (Form No. 45-D01609-en) and RO & NF Systems Shutdown (Form No. 45-D01613-en)
3. Handling, Preservation, and Storage (Form No. 45-D03716-en)

Full information of plant design, system operation, and troubleshooting is given in the FilmTec™ Reverse Osmosis Membranes Technical Manual (Form No. 45-D01504-en).

Regulatory Note

This product may be subject to drinking water application restrictions in some countries; please check the application status before use and sale.

DUPONT

dupont.com/water/contact-us

All information set forth herein is for informational purposes only. This information is general information and may differ from that based on actual conditions. Customer is responsible for determining whether products and the information in this document are appropriate for Customer's use and for ensuring that Customer's workplace and disposal practices are in compliance with applicable laws and other government enactments. The product shown in this literature may not be available for sale and/or available in all geographies where DuPont is represented. The claims made may not have been approved for use in all countries. Please note that physical properties may vary depending on certain conditions and while operating conditions stated in this document are intended to lengthen product lifespan and/or improve product performance, it will ultimately depend on actual circumstances and is in no event a guarantee of achieving any specific results. DuPont assumes no obligation or liability for the information in this document. References to "DuPont" or the "Company" mean the DuPont legal entity selling the products to Customer unless otherwise expressly noted. NO WARRANTIES ARE GIVEN; ALL IMPLIED WARRANTIES OF MERCHANTABILITY OR FITNESS FOR A PARTICULAR PURPOSE ARE EXPRESSLY EXCLUDED. No freedom from infringement of any patent or trademark owned by DuPont or others is to be inferred.

DuPont™, the DuPont Oval Logo, and all trademarks and service marks denoted with ™, ℠ or ® are owned by affiliates of DuPont de Nemours Inc. unless otherwise noted. © 2026 DuPont. All rights reserved.

Form No. 45-D04994-en, Rev. 2
May 2026

Consultas y ventas: AQUAREP · www.aquarep.com.ar · info@aquarep.com.ar · WhatsApp +54 9 11 6091-0087