Submerged Membrane Microfiltration Module

	HYDRAsub®- MBR	HSM500-ES
Module Specifications	Configuration:	Submerged Membrane
	Fiber Orientation:	Vertical
	Filtrate Flow :	Bi-directional
	Membrane Polymer:	Polyvinylidene Flouride (PVDF)
	Pore Size (nominal):	0.4 µm
	Fiber Dimensions:	OD 0.11" (2.8 mm)
	Number of Elements in Module:	20 (25 m² each)
	Nominal Membrane Area per Module:	5382 ft² (500 m²)
	Permeate Connections:	Two- 2" FNPT Connections
	Air Connections:	Two- 2" FNPT Connections
	Guide Pipe Connections:	To fit 2" pipe
	Typical Module Dry Weight:	1166 lbs (530 kg)
	Typical Module Wet Weight:	2449 lbs (1111 kg)
Operating Specifications	Maximum Trans Membrane Pressure (Vacuum):	-6 psig (-0.41 bar)
	Maximum Backwash Trans Membrane Pressure :	2 psig (0.14 bar)
	Maximum Instantaneous Chlorine Concentration:	5,000 ppm[a]
	Maximum Chlorine Tolerance:	742,000 ppm-hrs[b]
	MLSS Range:	8,000 - 12,000 mg/L[c]
	Operating Temperature Range:	41 - 104ºF (5 - 40º C)
	Feed Water pH Range:	6.0 - 8.0
	Cleaning pH Range:	1.0 - 11.0
	Operating Mode:	Outside to Inside
	Aerator Pressure Loss @ Maximum Air Flow (excluding hydraulic head):	0.58 psig (0.04 bar)
Typical Process Conditions	Operating Filtrate Flux†:	4-20 gfd (7-34 lmh)
	Peak Operating Flux†:	30 gfd (51 lmh)
	Nominal Air Flow:	90 scfm (152 Nm³/hr)
	Air Flow Range:	69 -103 scfm (117-175 Nm³/hr)
	Chemically Enhanced Backwash (CEB) Flux:	2.4 gfd (4 lmh)
	CEB Chemicals:	NaOCl[d]
	Clean In Place (CIP) Flux:	2.4 gfd (4 lmh)
	CIP Chemicals:	NaOCl or Citric Acid[d]

† -Depends on temperature and application
a -For a maximum of 2 hours
b- Maximum chemical tolerance for estimated life span of membrane
c -In membrane tank at steady state for municipal wastewater
d- Refer to operating manual for chemical concentrations and cleaning frequencies

Hydranautics believes that the information and data contained herein to be accurate and useful. The information and data are offered in good faith, but without guarantee, as conditions and methods of use of our products are beyond our control. Hydranautics assumes no liability for results obtained or damages incurred through the application of the presented information and data. It is the user's responsibility to determine the appropriateness of Hydranautics' products for the user's specific end uses.

Consultas y ventas: AQUAREP · www.aquarep.com.ar · info@aquarep.com.ar · WhatsApp +54 9 11 6091-0087

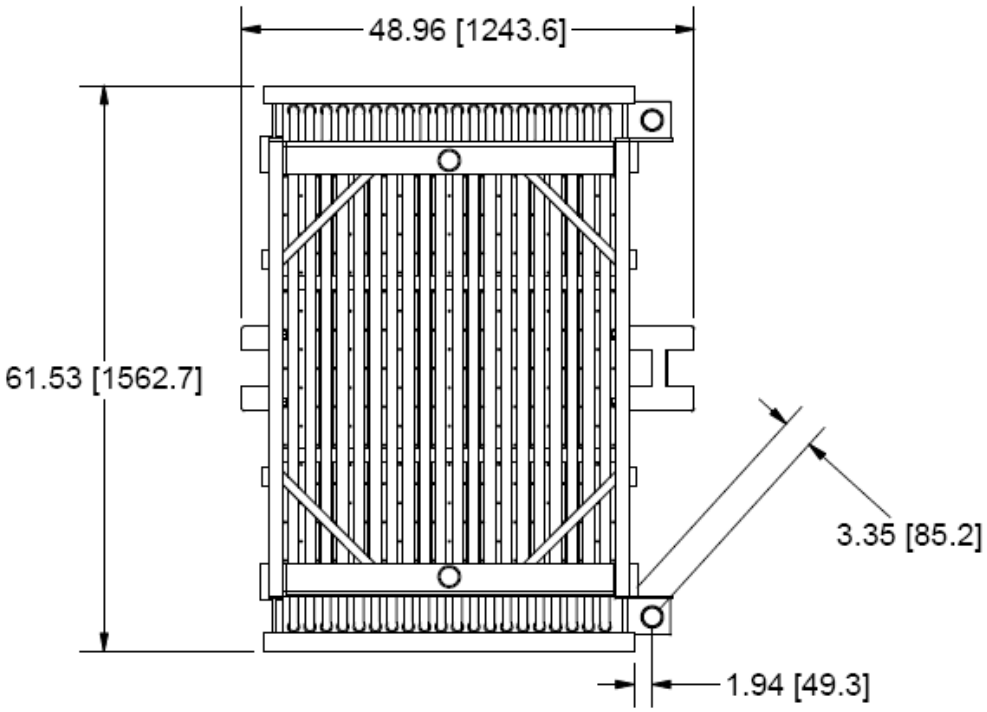

Top View

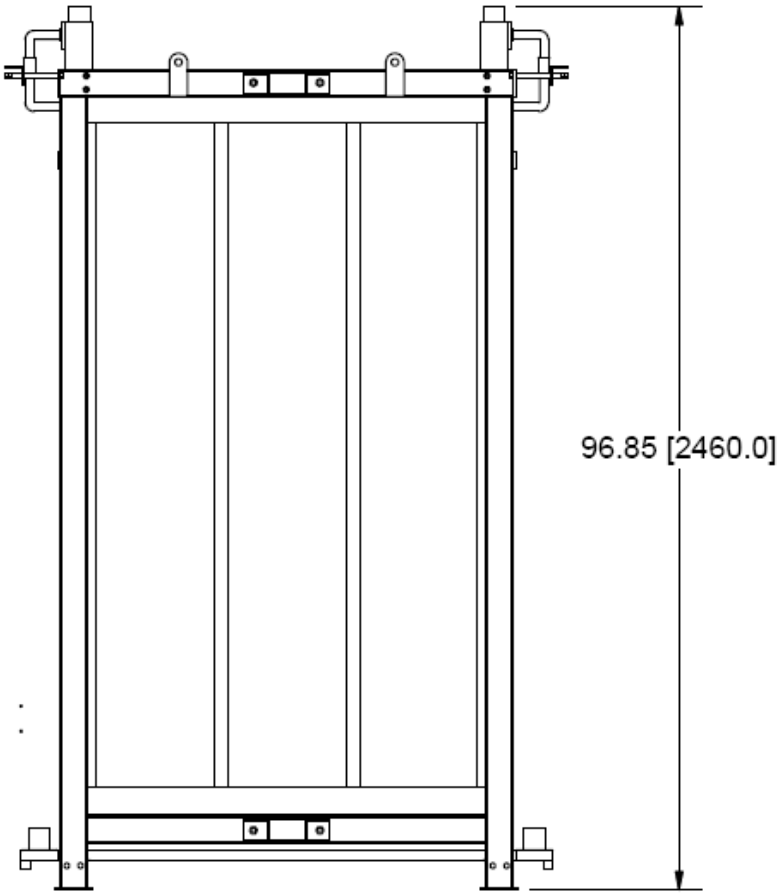

Side View

Note: Cage is made of stainless steel 304. Connections are in English units. For more detailed drawings, contact Hydranautics.

4/17/2017

Hydranautics Corporate:
1-800-CPA-PURE

Consultas y ventas: AQUAREP · www.aquarep.com.ar · info@aquarep.com.ar · WhatsApp +54 9 11 6091-0087