Capillary Ultrafiltration Module — HYDRAcap® MAX 80

Performance[1]	Filtrate Flow:	15.7 – 51.0 gpm (3.6 – 11.6 m^3/h)
	Filtrate Turbidity:	≤ 0.10 NTU
	Bacteria removal:	≥ 4 log
Type	Configuration:	Capillary Ultrafiltration Module
	Membrane Polymer:	TIPS PVDF
	Nominal Membrane Area:	1130 ft^2 (105 m^2)
	Fiber Dimensions:	ID 0.024" (0.6 mm), OD 0.047" (1.2 mm)
	Pore size:	0.08 micron
Application Data[2]	Typical Filtrate Flux Range:	20 – 65 gfd (34 – 110 l/m^2/h)
	Maximum Applied Feed Pressure:	73 psig (5.0 bar)[3]
	Maximum Transmembrane Pressure	30 psig (2.0 bar)
	Instantaneous Chlorine Tolerance:	5000 ppm[4]
	Maximum Chlorine Exposure:	1,000,000 ppm-hrs
	Maximum Feed Turbidity:	300 NTU[5]
	Maximum Operating Temperature:	104 °F (40 °C)
	pH Operating Range:	2.0 – 11.0
	Cleaning pH Range:	1.0 – 13.0
	Operating Mode:	Outside to Inside Filtration Dead End or Cross flow mode

Typical Process Conditions

Air Scour Rate:	7.3 – 9.1 acfm (12.3 – 15.4 m^3/h)
Air Scour Duration:	120 – 240 seconds
Air Scour Frequency:	Once every 20 – 60 minutes
Maintenance Clean Frequency:	1 – 3 times per day
Maintenance Clean Duration:	20 – 30 minutes
Disinfection Chemicals:	NaOCl, ClO_2 or NH_2Cl
Cleaning Chemicals:	NaOH, HCl, H_2SO_4, or Citric Acid

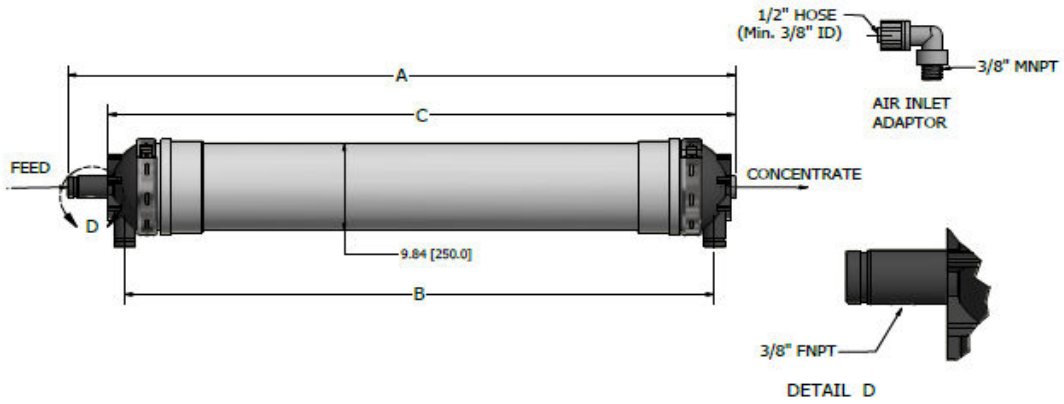

A, inches (mm)	B, inches (mm)	C, inches (mm)	Pipe connections	Dry Weight	Wet Weight
92.15 (2340.6)	83.11 (2110.9)	87.90 (2232.7)	2" Victaulic	135 lbs (62 kg)	260 lbs (118 kg)

Certifications: NSF61, NSF419 (US LT2ESWTR – Public Drinking Water Compliance)

[1] Typical module performance for most feedwaters.

[2] The limitations shown here are for general use. The values may be more conservative for specific projects to ensure the best performance and longest life of the membrane.

[3] At ≤20°C. 58psi (4 bar) between 21 - 30°C. 44 psi (3 bar) between 31 – 40°C.

[4] For 60 minutes or less.

[5] Higher values can be treated. Consult Hydranautics' technical staff.

Notice: Hydranautics also offers HYDRAcap® MAX 80-NON, which is a dummy module with no potting or fiber.

Hydranautics believes the information and data contained herein to be accurate and useful. The information and data are offered in good faith, but without guarantee, as conditions and methods of use of our products are beyond our control. Hydranautics assumes no liability for results obtained or damages incurred through the application of the presented information and data. It is the user's responsibility to determine the appropriateness of Hydranautics' products for the user's specific end uses. 9/1/20

Hydranautics Corporate: 401 Jones Road, Oceanside, CA 92058

Consultas y ventas: AQUAREP · www.aquarep.com.ar · info@aquarep.com.ar · WhatsApp +54 9 11 6091-0087