Nitto
Innovation for Customers

HYDRANAUTICS

Submerged Microfiltration Membrane Module

HYDRAsub™- MBR HSM30 w/ HSE 15

Module Specifications

Configuration:	Submerged Membrane
Fiber Orientation:	Vertical
Filtrate Flow:	Bi-directional
Membrane Polymer:	Polyvinylidene Flouride (PVDF)
Pore Size (nominal):	0.4 µm
Number of Elements in Module:	2 (15 m^2 each)
Nominal Membrane Area per Module:	322 ft^2 (30 m^2)
Permeate Connections:	(2)- 2" MNPT
Air Connections:	(2)- 1 1/2" MNPT
Guide Pipe Connections:	(2)- to fit 2.5" pipes

	Typical Dry Weight	Typical Wet Weight
HSM30-ES-HSE15	205 lbs (93 kg)	295 lbs (134 kg)
HSM30-ES15-316	207 lbs (94 kg)	299 lbs (136 kg)

Operating Specifications

Maximum Trans Membrane Pressure (Vacuum):	-6 psig (-0.41 bar)
Maximum Backwash Trans Membrane Pressure:	2 psig (0.14 bar)
Maximum Instantaneous Chlorine Concentration:	5,000 ppm[a]
Maximum Chlorine Tolerance:	742,000 ppm-hrs[b]
MLSS Range:	8,000 - 12,000 mg/L[c]
Operating Temperature Range:	41 - 104ºF (5 - 40º C)
Feed Water pH Range:	6.0 - 8.0
Cleaning pH Range:	1.0 - 11.0
Operating Mode:	Outside to Inside

Typical Process Conditions

Operating Filtrate Flux†:	4-20 gfd (7-34 lmh)
Peak Operating Flux†:	30 gfd (51 lmh)
Chemically Enhanced Backwash (CEB) Flux:	2.4 gfd (4 lmh)
CEB Chemicals:	NaOCl[d]
Clean In Place (CIP) Flux:	2.4 gfd (4 lmh)
CIP Chemicals:	NaOCl or Citric Acid[d]

† -Depends on temperature and application.
a -For a maximum of 2 hours.
b- Maximum chemical tolerance for estimated life span of membrane.
c -In membrane tank at steady state for municipal wastewater.
d- Refer to operating manual for chemical concentrations and cleaning frequencies.

Hydranautics believes that the information and data contained herein to be accurate and useful. The information and data are offered in good faith, but without guarantee, as conditions and methods of use of our products are beyond our control. Hydranautics assumes no liability for results obtained or damages incurred through the application of the presented information and data. It is the user's responsibility to determine the appropriateness of Hydranautics' products for the user's specific end uses.

Hydranautics Corporate:

Consultas y ventas: AQUAREP · www.aquarep.com.ar · info@aquarep.com.ar · WhatsApp +54 9 11 6091-0087

Top View

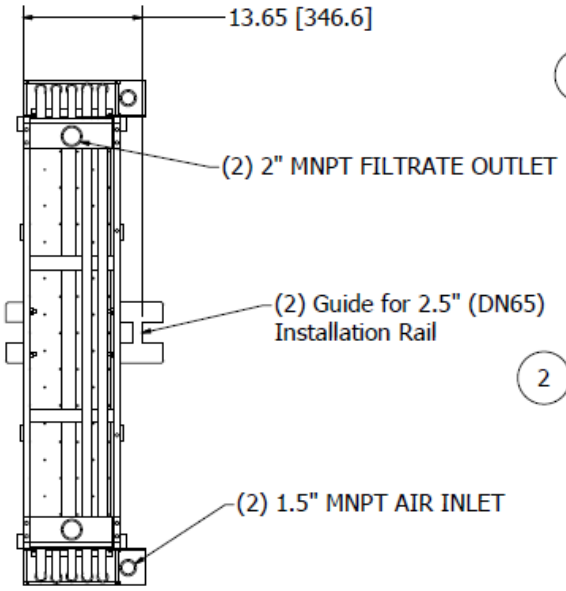

Isometric View

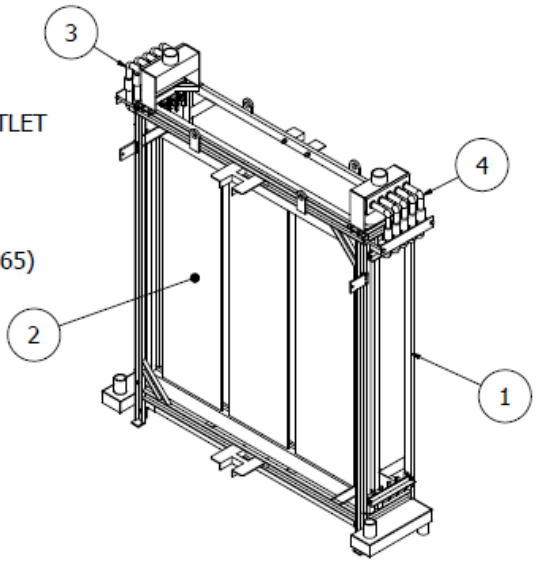

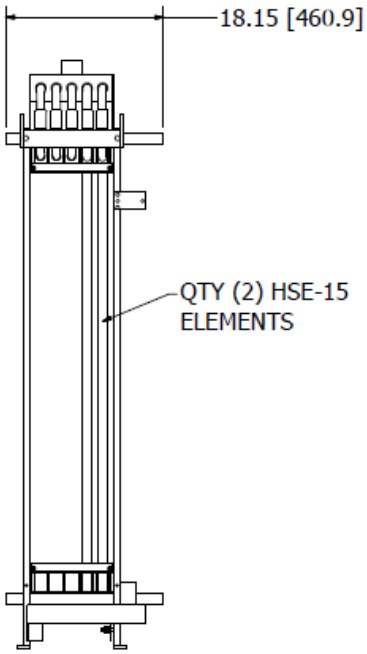

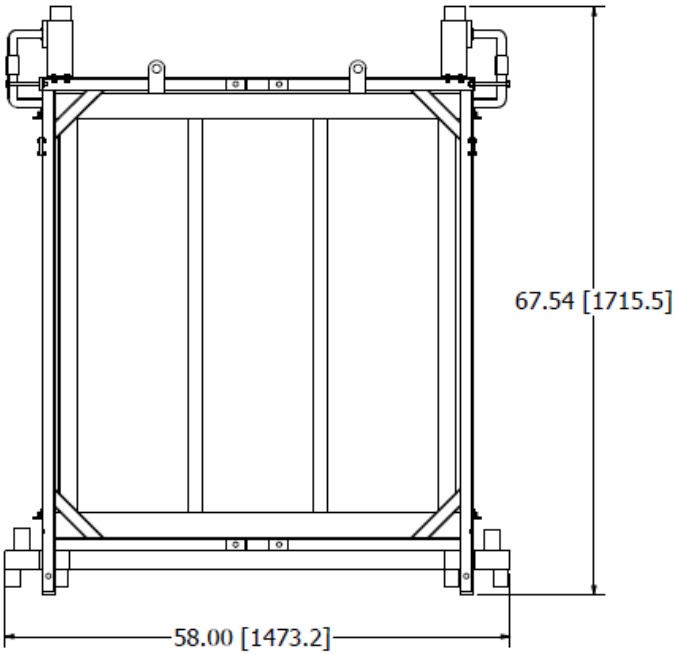

Side View

Front View

HYDRAsub-MBR Parts List to Order 30m² w/ HSE15			
Item #	**Qty**	**Part Number**	**Description**
1	1	HSC75-ES-HSE15*	HYDRAsub Cage SS304
2	2	HSE15	HYDRAsub Element
3	4	HSA25	HYDRAsub Filtrate Adapter
4	6	HSP	HYDRAsub Plug

Note: Cage is made of 304 or 316 stainless steel. Connections are in English units. For more detailed drawings, contact Hydranautics.

*SS316 Cage part number – HSC75-ES-316

2/1/2024

Hydranautics Corporate office

Web: Email:

Consultas y ventas: AQUAREP · www.aquarep.com.ar · info@aquarep.com.ar · WhatsApp +54 9 11 6091-0087