Nitto
Innovation for Customers

HYDRANAUTICS

Submerged Microfiltration Membrane Module

HYDRAsub™- MBR — HSM15 w/ HSE15

Module Specifications

Configuration:	Submerged Membrane
Fiber Orientation:	Vertical
Filtrate Flow:	Bi-directional
Membrane Polymer:	Polyvinylidene Flouride (PVDF)
Pore Size (nominal):	0.4 µm
Number of Elements in Module:	1 (15 m^2 each)
Nominal Membrane Area per Module:	161 ft^2 (15 m^2)
Permeate Connections:	(2)- 2" MNPT
Air Connections:	(2)- 1 1/2" MNPT
Guide Pipe Connections:	(2)- to fit 2.5" pipes

	Typical Dry Weight	Typical Wet Weight
HSM15-ES-HSE15	179 lbs (81 kg)	264 lbs (120 kg)
HSM15-ES15-316	180 lbs (82 kg)	267 lbs (122 kg)

Operating Specifications

Maximum Trans Membrane Pressure (Vacuum):	-6 psig (-0.41 bar)
Maximum Backwash Trans Membrane Pressure:	2 psig (0.14 bar)
Maximum Instantaneous Chlorine Concentration:	5,000 ppm[a]
Maximum Chlorine Tolerance:	742,000 ppm-hrs[b]
MLSS Range:	8,000 - 12,000 mg/L[c]
Operating Temperature Range:	41 - 104ºF (5 - 40º C)
Feed Water pH Range:	6.0 - 8.0
Cleaning pH Range:	1.0 - 11.0
Operating Mode:	Outside to Inside

Typical Process Conditions

Operating Filtrate Flux†:	4-20 gfd (7-34 lmh)
Peak Operating Flux†:	30 gfd (51 lmh)
Chemically Enhanced Backwash (CEB) Flux:	2.4 gfd (4 lmh)
CEB Chemicals:	NaOCl[d]
Clean In Place (CIP) Flux:	2.4 gfd (4 lmh)
CIP Chemicals:	NaOCl or Citric Acid[d]

† -Depends on temperature and application.
a -For a maximum of 2 hours.
b- Maximum chemical tolerance for estimated life span of membrane.
c -In membrane tank at steady state for municipal wastewater.
d- Refer to operating manual for chemical concentrations and cleaning frequencies.

Hydranautics believes that the information and data contained herein to be accurate and useful. The information and data are offered in good faith, but without guarantee, as conditions and methods of use of our products are beyond our control. Hydranautics assumes no liability for results obtained or damages incurred through the application of the presented information and data. It is the user's responsibility to determine the appropriateness of Hydranautics' products for the user's specific end uses.

Hydranautics Corporate office

Web: Email:

Consultas y ventas: AQUAREP · www.aquarep.com.ar · info@aquarep.com.ar · WhatsApp +54 9 11 6091-0087

Top View

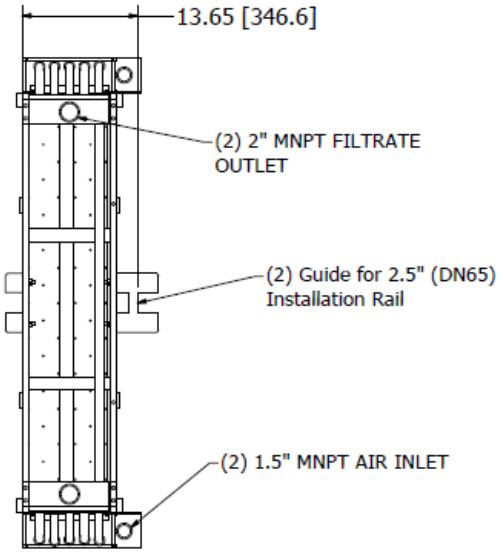

Isometric View

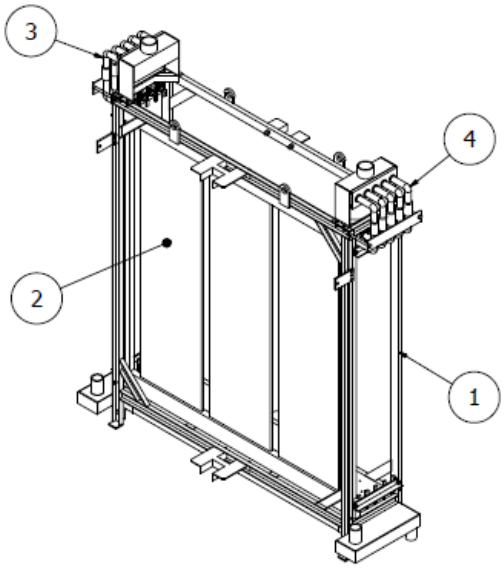

Side View

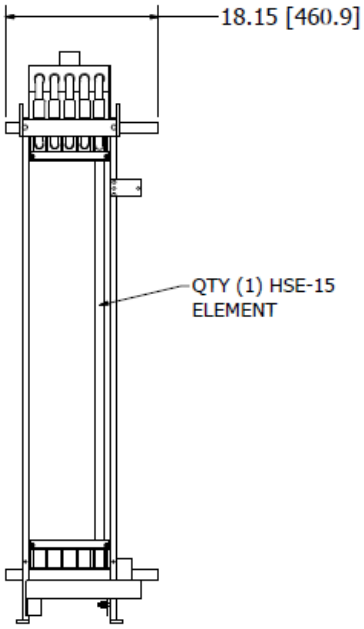

Front View

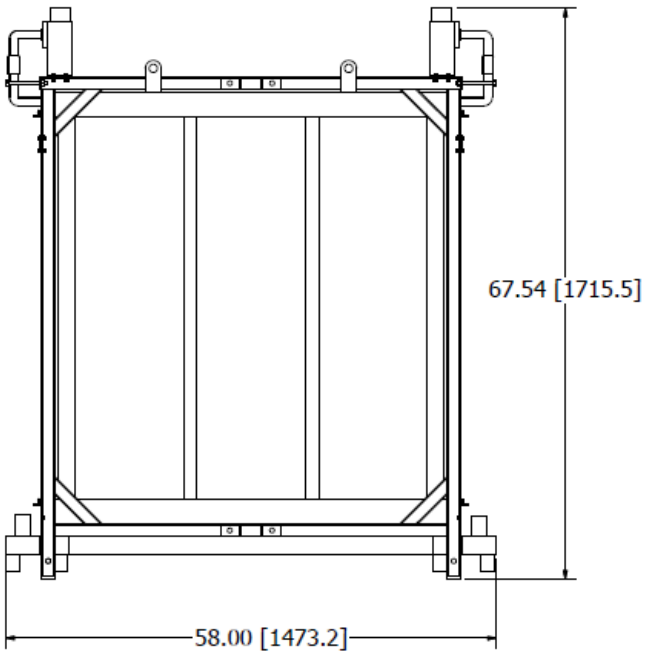

HYDRAsub-MBR Parts List to Order 15m² w/ HSE15			
Item #	**Qty**	**Part Number**	**Description**
1	1	HSC75-ES-HSE15*	HYDRAsub Cage SS304
2	1	HSE15	HYDRAsub Element
3	2	HSA25	HYDRAsub Filtrate Adapter
4	8	HSP	HYDRAsub Plug

Note: Cage is made of 304 or 316 stainless steel. Connections are in English units. For more detailed drawings, contact Hydranautics.

*SS316 Cage part number – HSC75-ES15-316

2/1/2024

Hydranautics Corporate office

Web: Email:

Consultas y ventas: AQUAREP · www.aquarep.com.ar · info@aquarep.com.ar · WhatsApp +54 9 11 6091-0087